TAPR APRS Special Interest Group Archive, July 1998

July 1998

TAPR's discussion forum for the Automatic Packet Reporting System (APRS), including software, hardware, GPS, mapping, networking, operations, and related technical topics.

This volume contains 1 original monthly file and 964 messages, arranged chronologically. The PDF is a readable access copy: MIME transfer encodings are decoded, HTML bodies are converted to plain text, and non-text attachments are represented by descriptive notes. The raw source text is supplied separately with the Internet Archive item.

Month	Messages	Original source file
1998-07	964	aprssig.9807

July 1998

Original source file: aprssig.9807
Source: http://ftp.tapr.org/tapr_history/SIG_Archives/aprssig/mail_archive/aprssig.9807

1. Sorry for the wrong URL

From: Robert Burton <kd4ydc@mail.atl.bellsouth.net>
Date: Wed, 01 Jul 1998 01:04:06 -0400
To: aprssig@tapr.org
Message-ID: <3599C345.CBC9BB4F@mail.atl.bellsouth.net>
Rendered body type: text/plain

Here is the right url for the AOR-210. Take a look and see what you
think.
Is this the AOR company that sells scanners?
http://www.qth.com/cgi-shl/classfd.exe/m|q|QTH.COM
Robert
KD4YDC

2. Re: [APRSSIG:25843]

From: "Wayne Sanderson" <WHSander@ix.netcom.com>
Date: 1 Jul 1998 05:37:29 GMT
To: "aprssig" <aprssig@tapr.org>
Message-ID: <0506F2455F7DF8DF>
Rendered body type: text/plain

»>says "KA9VNV-1" is "ESDA21", everything that comes from KA9VNV-1 is
»>displayed as ESDA21. If you send a message to "ESDA21", a quick look-up
»>in the substitution table says to send it to KA9VNV-1 instead.

>Since we're using computers, 'looking up' should be done >by the machine. A
>display of the list in a window on the screen can be used >for the human to
>double check that the association is correct and changes >made can be sent out
>to update all the tables in use on the network BY THE NCS >only.

Maybe someone who speaks UNIX can adapt a variety of the internet necessity, the Domain Name Server, for
 posting Tactical IDs. The DNS is how you get connected to an internet node that has a numerical IP
address without your having to know the number. Say your send mail server has a numerical IP address of
222.98.077.345. Who wants to remember a number like that? The DNS knows that 222.98.077.345 has a name,
SMTP.MYISP.COM. Whenever a computer connected to the network queries the DNS with the above name, the
DNS knows the IP number to send.
Maybe a simple adaptation of DNS lookup could solve this. You send a message to or get a position over
APRS from SAG-1. You see SAG-1 because the tracker transmitted it's packet with it's station ID,
K2VVY-2, and DNS identified it for the other machines on the network as SAG-1. You have all identifiers
in one place, you make changes in one place, the change shows on all monitors alike because the ID comes
 from one place, and outsiders see only appropriate station numbers unless they are set up to receive
the tactical ID reports from the DNS.
This is a UNIX function that is as old as the hills. Has anyone tried something like this?

3. Re: [APRSSIG:25837] winaprs crashing

From: Jim Duncan <ku0g@kcaprs.org>
Date: Wed, 01 Jul 1998 01:04:42 -0500
To: ddoulou@gte.net, "aprssig@tapr.org" <aprssig@tapr.org>
Message-ID: <3599D17A.B9F60E36@kcaprs.org>
Rendered body type: text/plain

Oh, joy! I've had a dozen crashes today and BOY were they nasty! Now I
know why!!! I suspect it's the multiple counties that are causing the
problem. WinAPRS sends warnings/watches out as one message line per
county...

Demos Doulou wrote:
>
> For the past few hours winaprs has been crashing on this packet:
>
> N2QAE>APRS817,KC2BIA,WIDE,WIDE:NWS-WATCH_T-STORM,PA_DELWA,PA_MONROE
>
> Thats all I can see on the bottom of the screen. This is coming in on the
> internet and everytime in comes in winaprs crashes. no unhandled exceptions
> just a hard crash.
>
> Untill this packet goes away, the pinellas igate will have to remain closed.
>
> 73
>
> Demos Doulou KR4US
> Pinellas Cty, Florida

> ACS Radio Officer
> kr4us@amsat.org
> ddoulou@gte.net

--
73 de Jim, KU0G
Chairman/Coordinator
Kansas City APRS Working Group, W0APR
Rogue Squadron Storm Chasers
Mailto:ku0g@kcaprs.org
Webpage: http://www.kcaprs.org
BorgNet: 1st of 10

4. Re: [APRSSIG:25844] Station setup?

From: Jeff Brenton <jeffb@espi.com>
Date: Wed, 01 Jul 1998 01:08:27 -0500
To: rrobertson@ameritech.net
Cc: aprssig <aprssig@tapr.org>
Message-ID: <3599D25B.5E8B@espi.com>
Rendered body type: text/plain

Robbie Robertson wrote:
> I am surrounded by great stations and can hear (see?) plenty. Having
> not attended any NIAN meetings as yet, I would like to set my
> station's operation correctly so as not to cause undue digipeating or
> unneccessary beaconing..
>
> Some reading has led me to believe I should not use RELAY in my UI but
> rather set it to another station way out from me that I can reliably
> communicate with. I am in Buffalo Grove, IL. running ten watts to a
> vertical at 50 feet, so I do see a lot of stations directly..

Best advice on the home station setup is to pick the direction you'd
most like your packets to go, and select digis (the ones with stars)
along that direction.

You make it to Woodstock just fine (KA9VNV-3), and I suspect that
N9RER-15 (when it's operating; intermittent right now due to antenna
problems) hears you, too.

In the NIAN area, a path from home of WIDE3-3 will take you out to
Milwaukee, most of the way to Madison and Moline, and south to Kankakee.
It will "light up" KA9VNV-3 and N9RER-15 on the first hop, WA9CJN-15,
W9AXD-15, N9UUR-10, AE9A-10 and N9HVB-15 on the second hop, and a digi
near Sterling, whose call escapes me (currently off the air).

> BTW, I finally figured that MY tracker is working, but strange. I take
> a short trip and no indication of movement on my screen, but found I
> could play the track of my icon by hooking it and playing the "track".
> Yet all the other mobiles plot with the "course and speed" line with
> thier symbols...

If you selected a GPS string of $GPGGA, you do not send course/speed
information with your position, so APRS doesn't show a course/speed
vector. You DO gain altitude information, however. You might try
alternating between $GPGGA and $GPRMC (assuming you have a KPC-3 for the
tracker) or using both $GPGGA and $GPVTG sentences (PacComm TNC). This
will then show course/speed, like the other trackers.

For the tracker's unproto path, RELAY,WIDE will work well 'round here,
optionally with a second WIDE or WIDE2-2 on the end.
--

Jeff Brenton, Ham Radio call KA9VNV
Questionable web page: http://www.dididahdahdidit.com
Selling some toys: http://www.espi.com/ForSale.html

5. "real maps"

From: Bill Vodall <wa7nwp@bigsky.com>
Date: Wed, 1 Jul 1998 00:24:04 -0700 (PDT)
To: aprssig@tapr.org
Message-ID: <199807010724.AAA19898@eagle.bigsky.com>
Rendered body type: text/plain

This evening I had a chance to play a bit with the satellite
images from http://www.terraserver.microsoft.com . With the
help of an system at work running IE4, I was able to download a
fair sized image of a 4x4 (?) mile area covering downtown Redmond, Wa.
I then converted it to a BMP, loaded it in to the Bitmap function

of APRS-SA+, and used the Delorme map to pick two calibration
points.

A moment late, my "house" popped up on the picture right where
it should be.

Very cool stuff.

I'll upload the picture and calibration file to my AOL account
in a bit if anybody else wants to try it out.

  http://members.aol.com/vodall/ts1.zip

The pictures are a bit dated, from 1990 and 1991, but still
very neat.

73,
Bill - WA7NWP

6. Re: [APRSSIG:25831] KPC2 and AOR-210

From: kd4ydc@juno.com (Robert W Burton)
Date: Wed, 1 Jul 1998 07:13:47 -0400
To: kkelly@radix.net
Cc: aprssig@tapr.org
Message-ID: <19980701.071735.3214.0.KD4YDC@juno.com>
Rendered body type: text/plain

On Tue, 30 Jun 98 19:59:25 -0500 Kevin Kelly <kkelly@radix.net> writes:
>Greetings SIG,
>

<snip>
>The AOR-210 is slightly different in that it does not have a DB 25,
>but rather the DIN type jack on the front of the unit. This is much
easier
>to interface because all the wires come out the one end. Not having an
>AOR 210 in front of me, I am guessing that the RS232 is interfaced
through the
>DIN jack. Same goes for the Power. This is better than the Heath -21
>because the power jack is in the side causing the power plug to stick
out about a
>half inch always getting in the way of a clean installation.
<snip>
>
>73,
>Kevin Kelly/N6QAB

It does have a db 9 connector on the back from what I remember.......
Does have the din on the front for the radio. The power cord.......
that I don't remember which side but it does have one. Don't
have it in front of me (the url) but check out the ads (used)
on QTH.COM.
73,
Robert Burton
KD4YDC

_____
You don't need to buy Internet access to use free Internet e-mail.
Get completely free e-mail from Juno at http://www.juno.com
Or call Juno at (800) 654-JUNO [654-5866]

7. DF Jr/APRS/DJ-S11

From: "Lloyd Verhage" <verhage@humec.ksu.edu>
Date: Wed, 1 Jul 1998 06:56:13 CST6CDT
To: aprssig@tapr.org
Message-ID: <1353AE2047@humec.ksu.edu>
Rendered body type: text/plain

For my next balloon launch I've purchased a DF Jr from Agerlo. Its
output can be connected to a serial port on a laptop running APRS.
With the multiport adapter I can also connect my GPS and TNC.
Together they display my position, the balloons position, and a
heading in case the balloon stops reporting GPS data (which happened
on our last flight). I intend to use the APRS frequency for
telemetry and to place a seperate beacon on the capsule. The backup
beacon will be used primarily by the DF Jr. The beacon will be an
Alinco DJ-S11 and Basic Stamp. The stamp will be programmed to

transmit tones in five second bursts (50% duty cycle) with a 10
minute interval between IDs.

My question relates to setting up the beacon. If I understand
rightly, on the Alinco, the stamp needs to pull the tip of the mic
jack to ground while also sending the tones to it (the tip of the mic
jack). The other connection is a ground to the sleeve of the speaker
jack.

Does this sound right? It bugs me that I'm trying to put the same
jack to ground and transmit tones to it at the same time.

Any input or clarification would be appreciated.

Thanks
Lloyd

8. RE: [APRSSIG:25851] DF Jr/APRS/DJ-S11

From: "Demos Doulou" <ddoulou@gte.net>
Date: Wed, 1 Jul 1998 08:14:50 -0400
To: <verhage@humec.ksu.edu>, <aprssig@tapr.org>
Message-ID: <001e01bda4e9$d89328a0$861ffed0@wingate>
Rendered body type: text/plain

Using tones may not result in a reliable df heading in the Jr. I believe
that the way the JR works is by using tones made by the Doppler effect to
get the bearing. If you are transmitting a tone it can screw up the
reading. Some of our local foxhunt people have made circuits like this just
to throw off the Doppler guys.

73

Demos Doulou KR4US
Pinellas Cty, Florida
 ACS Radio Officer
kr4us@amsat.org
ddoulou@gte.net

> -----Original Message-----
> From: aprssig@tapr.org [mailto:aprssig@tapr.org]On Behalf Of Lloyd
The stamp will be programmed to
> transmit tones in five second bursts (50% duty cycle) with a 10
> minute interval between IDs.
>
> My question relates to setting up the beacon. If I understand
> rightly, on the Alinco, the stamp needs to pull the tip of the mic
> jack to ground while also sending the tones to it (the tip of the mic
>

9. Re: [APRSSIG:25852] RE: DF Jr/APRS/DJ-S11

From: "Lloyd Verhage" <verhage@humec.ksu.edu>
Date: Wed, 1 Jul 1998 08:10:55 CST6CDT
To: aprssig@tapr.org
Message-ID: <1492566C9C@humec.ksu.edu>
Rendered body type: text/plain

Does a single tone get around this?

> Using tones may not result in a reliable df heading in the Jr. I believe
> that the way the JR works is by using tones made by the Doppler effect to
> get the bearing. If you are transmitting a tone it can screw up the
> reading. Some of our local foxhunt people have made circuits like this just
> to throw off the Doppler guys.

> > -----Original Message-----
> > From: aprssig@tapr.org [mailto:aprssig@tapr.org]On Behalf Of Lloyd
> The stamp will be programmed to
> > transmit tones in five second bursts (50% duty cycle) with a 10
> > minute interval between IDs.
> >
> > My question relates to setting up the beacon. If I understand
> > rightly, on the Alinco, the stamp needs to pull the tip of the mic
> > jack to ground while also sending the tones to it (the tip of the mic
> >
>
>

10. RE: [APRSSIG:25839] Re: KPC2 and AOR-210

From: "Kevin Kelly" <kkelly@radix.net>
Date: Wed, 1 Jul 1998 09:36:13 -0400
To: <n8exf@juno.com>, <aprssig@tapr.org>
Message-ID: <000501bda4f5$375b1220$d5b1e58c@kellykm-r>
Rendered body type: text/plain

Greetings,

Yu are correct. The AOR 210 does have a db9 on the back. Thanks for the info.

73,
Kevin Kelly/N6QAB

-----Original Message-----
From: aprssig@tapr.org [mailto:aprssig@tapr.org]On Behalf Of R L BOEHM
Sent: Tuesday, June 30, 1998 9:26 PM
To: aprssig@tapr.org
Subject: [APRSSIG:25839] Re: KPC2 and AOR-210

The AOR-210 has a mini din for the radio interface (the HK21 used a HANDSET type RJ11) with a DB9, coaxial power connector ***WARNING! CENTER is NEGATIVE*** and the "standard" sub-mini/mini plug for audio and PTT. There is an internal mod to key Yaesu HT's.

73 de Bob, N8EXF // KN
homepage http://www.qsl.net/n8exf

Don't sweat the petty things, and don't pet the sweaty things

>
>The AOR-210 is slightly different in that it does not have a DB 25,
>but
>rather the DIN type jack on the front of the unit. This is much easier
>to
>interface because all the wires come out the one end. Not having an
>AOR 210
>in front of me, I am guessing that the RS232 is interfaced through the
>DIN
>jack. Same goes for the Power. This is better than the Heath -21
>because the
>power jack is in the side causing the power plug to stick out about a
>half
>inch always getting in the way of a clean installation.
>

_____
You don't need to buy Internet access to use free Internet e-mail.
Get completely free e-mail from Juno at http://www.juno.com
Or call Juno at (800) 654-JUNO [654-5866]

11. Re: [APRSSIG:25848] Re: Station setup?

From: Jon Ogden <jono@enteract.com>
Date: Wed, 1 Jul 98 08:51:22 -0500
To: "Jeff Brenton" <jeffb@espi.com>, <aprssig@tapr.org>
Message-ID: <199807011349.IAA20783@tapr.org>
Rendered body type: text/plain

>If you selected a GPS string of $GPGGA, you do not send course/speed
>information with your position, so APRS doesn't show a course/speed
>vector. You DO gain altitude information, however. You might try
>alternating between $GPGGA and $GPRMC (assuming you have a KPC-3 for the
>tracker) or using both $GPGGA and $GPVTG sentences

Yes, but regardless of what sentence he uses, the program should still plot his position which is what he is having problems with. Position data is sent with all sentences.

And also, the $GPVTG sentence does not appear to do anything with Garmin GPS units. At least not my 12XL. I use $GPRMC as my primary and $GPGGA for my secondary.

73,

Jon

KE9NA

Jon Ogden

jono@enteract.com
www.qsl.net/ke9na

"A life lived in fear is a life half lived."

12. Re: [APRSSIG:25837] winaprs crashing

From: Bob Bruninga <bruninga@nadn.navy.mil>
Date: Wed, 1 Jul 1998 10:28:02 -0400 (EDT)
To: Demos Doulou <ddoulou@gte.net>
Cc: aprssig@tapr.org
Message-ID: <Pine.SOL.3.96.980701102619.24240B-100000@arctic>
Rendered body type: text/plain

On Tue, 30 Jun 1998, Demos Doulou wrote:

> For the past few hours winaprs has been crashing on this packet:
>
> N2QAE>APRS817,KC2BIA,WIDE,WIDE:NWS-WATCH_T-STORM,PA_DELWA,PA_MONROE

APRSdos REPLY/COMMENT: The _ after the NWS-WATCH should be ":". What software is sending this format? THat is what we must find out. I dont know of anyway that any software can send this format... without the colon?

Reply mail addr: wb4apr@amsat.org
US mail address: 115 old Farm Ct, Glen Burnie, MD 21060
See DAYTON97 HISTORY: http://web.usna.navy.mil/~bruninga/dayton.html
See Maryland APRS LIVE: http://web.usna.navy.mil/~bruninga/aprs.html
See GPS on ANY radio: http://www.tapr.org/tapr/html/mic-e.html

13. Re: [APRSSIG:25853] RE: DF Jr/APRS/DJ-S11

From: "David VanHorn" <dvanhorn@cedar.net>
Date: Wed, 1 Jul 1998 09:24:55 -0500
To: <verhage@humec.ksu.edu>, <aprssig@tapr.org>
Message-ID: <007b01bda4fc$065835c0$a9f135ce@xenu>
Rendered body type: text/plain

>Does a single tone get around this?
>
>> Using tones may not result in a reliable df heading in the Jr. I believe
>> that the way the JR works is by using tones made by the Doppler effect to
>> get the bearing. If you are transmitting a tone it can screw up the
>> reading. Some of our local foxhunt people have made circuits like this
just
>> to throw off the Doppler guys.

The Jr's filter is exteremely narrow, and synchronus, so you'd have to be dead
on, within a few 10ths of a Hz to disturb it.

Tones and noise don't bother it.

14. W7LUS-14 Itinerary

From: Joe Loewy <jloewy@wncnet.net>
Date: Wed, 01 Jul 1998 10:56:07 -0400
To: "aprssig@tapr.org" <aprssig@tapr.org>
Message-ID: <359A4E07.4C58FD2D@wncnet.net>
Rendered body type: text/plain

NEW ITEN.
Pick/Up CHELMSFORD AND WORCESTER, MA 7/1
DEL 7AM 7/7 MOSCONE C.C. SAN FRAN, CA.
1ST ROUTE STOPS: PEMBROKE, NY. LAKE
STATION, IN. MM318-NE. NEAR MM52-WY.
FERNLEY, NV.
ALT ROUTE: AMHERST, OH. MM182-IA. PINE
BLUFFS, WY. ELKO, NV. SF.
[THE ROUTE USED DEPENDS PRIMARILY ON
WEN I LVE LAST P/U, THEN WX, TFC, ETC]

15. Re: DF Jr/APRS/DJ-S11

From: Mike Musick <71301.3106@compuserve.com>
Date: Wed, 1 Jul 1998 10:57:57 -0400
To: Blind.Copy.Receiver@compuserve.com
Message-ID: <199807011103_MC2-51DB-A382@compuserve.com>
Rendered body type: text/plain

Demos opines in a response to Lloyd:

>Using tones may not result in a reliable df heading in the Jr. I believe
>that the way the JR works is by using tones made by the Doppler effect to
>get the bearing. If you are transmitting a tone it can screw up the
>reading. Some of our local foxhunt people have made circuits like this just
>to throw off the Doppler guys.

Not the case here. The switched capacitor ("commutating") filter used in the DFjr and similarly designed Roanoke derivatives is excruciatingly sharp - you are going to have to be consistently within 2 Hz of the DF unit's Doppler tone to have any influence at all. Even if you were to deliberately "tune" a foiling mechanism to a specific DFjr, I'll wager that normal unit-to-unit differences would make its "deception" hit-and-miss for anybody else.

In bench measurement of a pre-DFjr Roanoke design, the 6dB points on this filter were +/- .5 Hz, and from daily use I can make an educated guesstimate that the DFjr's tighter design is about 3db better.

If your foxhunt group was successful with their "Doppler scrambler", I would hazard a guess that the hunters they were foiling were probably using the Dick Smith unit, which was somewhat notorious for its inability to filter audio content.

I think Lloyd will be fine, though he might want to test the setup on the improbable chance that he did hit the rotation tone on his particular DFjr square on.

  ...mike/N0QBF
     71301.3106@compuserve.com

16. Tac calls, another idea

From: Ray Vaughan <rvaughan@gate.net>
Date: Wed, 01 Jul 1998 14:03:17 -0400
To: aprssig@tapr.org
Message-ID: <1.5.4.32.19980701180317.0094694c@pop.gate.net>
Rendered body type: text/plain

This thread on tac calls is getting a bit too heated... let's all relax a bit. Make suggestions, then listen to others. This SIG is like brainstorming. There are no bad ideas... even the bad ones can lead to a good one in someone else's mind.

Here's my latest idea:

Let the sending station define his perfered TAC call. We would appear on screen as the call sign, but once the beacon text comes up, the optional tac call sign would replace the call sign IF the software was in TAC pefered display mode.

So, somewhere in my beacon text would be %SAG-1%.   On screen I would be KD4BBM-12. But IF you're in TAC perfered mode, I would be SAG-1. If you were in normal mode, I would still be KD4BBM-12. This gives the sender some control, let's the viewer decide which one he wants, and keeps the real call on the air.

(I used % just as an example, I'm sure there's a better character to frame the TAC)

Of course, if the software has a local TAC display table, settings there would override all of that.

Make any sense?

Ray, KD4BBM

17. RE: [APRSSIG:25860] Tac calls, another idea

From: "Young, Bill" <byoung@cmh.edu>
Date: Wed, 1 Jul 1998 14:02:20 -0500
To: rvaughan@gate.net, aprssig@tapr.org
Message-ID: <119D55D6D69FD011AB9B000092966BB45EA69C@EXCHANGE2>

Rendered body type: text/plain

Ray and the group,

I was in an earlier discussion of "tactical calls" and haven't jumped into this one till now.

The main reason I'm in need of tac-calls is for standalone trackers used in public service events. I'd like to be able to replace a failed tracker with one from "stock" rather than having to re-program the device (local *or* remote!).

Your schema, while good, does not address that facet of the issue due to it requiring the tac-call to be "embedded" in the beacon text. That, of course, would require re-programming to accomplish.

One other point made (by other participants) related to the potential problems as regards accurate and current tac-call "list" distribution to participants in a "real-world environment". I would like to offer the opinion that remote (or even local) programming under the same "real-world" conditions offers similar "challenges" that make those two issues "cancel each other out".

I don't have a solution, I just know I have a need <g>.

Bill Young
KB0UZQ

> -----Original Message-----
> From: Ray Vaughan [SMTP:rvaughan@gate.net]
> Sent: Wednesday, July 01, 1998 1:04 PM
> To: aprssig@tapr.org
> Subject: [APRSSIG:25860] Tac calls, another idea
>
> This thread on tac calls is getting a bit too heated... let's all
> relax a
> bit. Make suggestions, then listen to others. This SIG is like
> brainstorming. There are no bad ideas... even the bad ones can lead
> to a
> good one in someone else's mind.
>
> Here's my latest idea:
>
> Let the sending station define his perfered TAC call. We would appear
> on
> screen as the call sign, but once the beacon text comes up, the
> optional tac
> call sign would replace the call sign IF the software was in TAC
> pefered
> display mode.
>
> So, somewhere in my beacon text would be %SAG-1%. On screen I would
> be
> KD4BBM-12. But IF you're in TAC perfered mode, I would be SAG-1. If
> you
> were in normal mode, I would still be KD4BBM-12. This gives the
> sender some
> control, let's the viewer decide which one he wants, and keeps the
> real call
> on the air.
>
> (I used % just as an example, I'm sure there's a better character to
> frame
> the TAC)
>
> Of course, if the software has a local TAC display table, settings
> there
> would override all of that.
>
> Make any sense?
>
> Ray, KD4BBM

18. Re: [APRSSIG:25860] Tac calls, another idea

From: Steve Dimse K4HG <k4hg@tapr.org>
Date: Wed, 1 Jul 1998 15:13:52 -0400
To: <rvaughan@gate.net>, "aprssig" <aprssig@tapr.org>
Message-ID: <199807011913.OAA07835@tapr.org>
Rendered body type: text/plain

>Here's my latest idea:
>
>Let the sending station define his perfered TAC call. We would appear on
>screen as the call sign, but once the beacon text comes up, the optional tac
>call sign would replace the call sign IF the software was in TAC pefered
>display mode.
>
This really isn't any different than what we have now, but just reverses
the role of the tac and mycall...instead of putting the tac call in the
tnc and real call in the beacon, you reverse that. This is just a lot of
extra work to reach the same place. It doesn't address the issue brought
up by Ralph, namely how to reassign the tac call of a tracker moved from
one vehicle to another.

Keep trying...

Steve K4HG

19. APRServe Bug fixed

From: Steve Dimse K4HG <k4hg@tapr.org>
Date: Wed, 1 Jul 1998 15:17:33 -0400
To: "aprssig" <aprssig@tapr.org>
Message-ID: <199807011917.OAA07989@tapr.org>
Rendered body type: text/plain

There has been a bug in APRServe for a while that kept unregistered users
from transmitting anything...

If you have been having trouble making things work as an unregistered
user, try it again now...

Steve K4HG

20. Modem/TNC Lights

From: "Rich Mazzeo" <n3xku@erols.com>
Date: Wed, 1 Jul 1998 16:37:07 -0400
To: "APRSSIG" <aprssig@tapr.org>
Message-ID: <000701bda530$07a04880$76faaccf@richmazz>
Rendered body type: text/plain

I have found a program for showing the line status of any com port 1-4.
I forget who asked about this so I am posting to the SIG.
    Anyway it's called Linex Lamps Pro and you can use it if your TNC is
mounted out of view or if it is an internal TNC (like mine). It is
on-screen and the indicators are
RI CD TxD RxD DTR DSR RTS CTS and EC.
    This is a 32 bit program for '95. So just E-mail me direct and I will
send the zip file to you (I forgot exactly where I downloaded it from)
N3XKU@erols.com

    P.S.: APRS was at the Penn Wireless FD this year for the first time and
except for forgetting the "initkan.tnc" file everything worked out OK and
the I-Gates gave us some easy contacts from Texas. I was glad to explain
all this to the passers by, most not familiar with packet at all, who seemed
most interested.

73
--
Rich Mazzeo, N3XKU, Fairless Hills, PA
Bucks County SkyWarn and A.R.E.S.
TNC is on >144.390<, Automatic Position Reporting System (Mailbox: -2)
FM Voice: 147.300+ / 147.150+ / 146.970- / 444.200+ / and 146.535 / 446.025
smplx
ICBM/APRS: =4010.25N/07450.69W- (Grid: FN20ne) Currently Running: WinAPRS
2.20

21. Re: [APRSSIG:25860] Tac calls, another idea

From: Jeff Brenton <jeffb@espi.com>
Date: Wed, 01 Jul 1998 16:06:36 -0500
To: Ray Vaughan <rvaughan@gate.net>
Cc: aprssig <aprssig@tapr.org>
Message-ID: <359AA4DB.54C9@espi.com>
Rendered body type: text/plain

> Isn't this the function of the local TAC table?

Your message as posted on APRSSIG simply said "put the TC in BTEXT"; it
didn't mention the use of a local tactical call translation table.

The argument on the SIG seems to really be a non-argument. The description of APRSPlus appears to use a local table for the display only, and all over-the-air stuff is to the real call sign.

Bob is arguing that, unless both are displayed, people will get confused and type the wrong thing. However, the table SHOULD hide the details of the real call from someone using a translation table - they type or click on the tactical call (whatEVER it is on their display), and the program automatically translates this to the OTA real call sign, no fuss, no muss, no confusion.

Others argue that displaying both will be more confusing that only showing one or the other.

My suggestion is that Bob can ignore tactical calls, and everyone else can build it into their programs, cutting into his market share. And I have suggested a way to coordinate tactical tables over the air, using the existing message format, just like NWS messages are shipped around.

So, there's very few real points of contention, just no one is speaking the same language.... and the use of message quotes is getting in the way - when people have quoted verbatim what was previously posted, rather than restating it to show _how they understand it_, the arguments go on, even though everyone (essentially) agrees!

So, to restate what I'm seeing here on the SIG:

(1) Trackers should always use their real call sign.
(2) The local program, be it at net control or whereever, should have a translation table of real<->tactical calls, and select which way to view them.
(3) A way to coordinate translation tables for special events amongst all participating stations should be provided, and a way to designate an official control station for the table generation/correction should be provided for.

(1) is easy; it's what 99% of people do now. (2) is available in APRSPlus now, from what I'm reading (don't have it, can't tell). It could be implemented in any version of APRS, albeit at the cost of something else for APRS/DOS, simply because of the limitations of the language used.

(3) is where some discussion could be done, and I've already posted my suggestions, to use a special message address, with one or more real to tactical call translations as the message text.
--

Jeff Brenton, Ham radio call KA9VNV
http://www.espi.com
Questionable web page: http://www.dididahdahdidit.com
Covert supporter of the Vast Right Wing Conspiracy (tm)

22. KD4EMI-3 digi status report

From: kd4emi@juno.com (Michael A Kantor)
Date: Wed, 1 Jul 1998 18:18:21 -0400
To: aprssig@tapr.org
Cc: APRS-FL@tapr.org
Message-ID: <19980701.181822.3270.0.kd4emi@juno.com>
Rendered body type: text/plain

Bad News

Looks like it took another lightning hit. The repair crew was out last week replacing other antenna's on the roof. (it looks like an antenna morgue up there).

The radio is smoked...
There is chewy looking electrolyte all through the radio which may have caught on fire.
The RF circuit is fried. The CPU smells like ozone and is charred.
The radio is as dead as can be. The security guard yanked the plug to unplug it and almost had to hit it with a fire extinguisher when it blew.

The antenna is blown up and the hardline is blown also. I hooked up a dummy load to it today and there is a break somewhere. This will require poking around between floors again (like last time) to find and fix the break.

The good(?) news

I can replace the radio with a spare one of my own, and I can fix the
coax (hopefully). The antenna will have to wait -- I am not going to buy
a third antenna for it.
The problem is the hospital is just about closed (the outpatient dept
which remained open will close soon and the E.R. has been closed a while.
There are no inpatients)
The hospital is a ghost town, and I dont think Columbia will spring for a
new radio and antenna /coax since they are in financial trouble. Will
hope to get things back together before hurricane season, but it looks
like EMI -3 is down for a while if not out...

Good news

We were going to put a 440 station there, and just got hung up with other
projects. The 440 repeater was going to be aprs compatable. Since the
repeater club has bigger pockets, this may be the time to push them to
put it up there, (they have everything just sitting in storage) and use
the coax for them. i can sneak the TNC and my radio stuff in there and
this would be the first (?) South florida APRS 440 repeater.

I wonder how many users in my area would use a 440 repeater (with
autopatch) and utilize the aprs capability. If I get a good response,
this may be the time to make the change...

Please contact me if you would be able to use a 440 machine with range
say from
Boynton beach to Miami (+-) and use aprs as well with your 440 rig

Oh the good news is that the TNC works fine...
Mike KD4EMI@JUNO.COM

_____
You don't need to buy Internet access to use free Internet e-mail.
Get completely free e-mail from Juno at http://www.juno.com
Or call Juno at (800) 654-JUNO [654-5866]

23. HABITAT SkyLab launch July 4 a.m.

From: Don Pfister KA0JLF <dpfister@kc.net>
Date: Wed, 01 Jul 1998 19:00:08
To: aprssig@tapr.org
Message-ID: <3.0.5.16.19980701190008.42572c8c@pop3.kc.net>
Rendered body type: text/plain

>Date: Tue, 30 Jun 1998 22:27:39
>To: dpfister@kc.net
>From: Don Pfister KA0JLF <dpfister@kc.net>
>Subject: HABITAT SkyLab launch July 4 a.m.
>Bcc: HABITAT, wd5ivd@tapr.org, kudl@qni.com, grinnell@surplussales.com
>
>One of our group typed (modified the earlier version) a News Release. It
has the lat/long and directions to the park. Thanks to HABITAT SkyLab team
member Mamta for this information!!
>
>Thanks to all the HABITAT SkyLab team members for their help!
>
>Don
>
>-------------------- Next Flight Notification

>
>
>   HABITAT SkyLab II
>(High Altitude Basic Investigation Testing And Tracking)
>
>   "Inch to Feet flight (98a)"
>
>Get ready to watch our Mission Commander 'Teenie Beanie Inch' (suggested
by Beth and Liz) go up with our capsule..at the park near Edgerton, KS
around 07:15 a.m. on Saturday, July 4, 1998
>
>....if you are coming from Kansas City (i.e. from the North) from I-35
take exit 202 (Edgerton). The park is .9 miles from I-35, to be exact the
address is 20200 Sunflower Road.
>
>This flight's purpose is to release the 2nd graders experiments. APRS

(GPS tracking data) will be transmitted on 145.79 MHZ. A 49.830 Mhz beacon
for the voice experiment will be on board, as well as a screamer siren
(turned on and off by the onboard computer program).
>
>Launch site:
>Martin Creek Park, Edgerton, KS.
>38 45.6852N
>095 00.1473W
>
> OR (BIG OR):
>George Farm, Edgerton, KS.
> 38 47.811N
>094 57.509W
>
>
>For new comers:
>
>If you wish to be a Balloon Dog (those that prepare the balloon) do not
wear rings, bracelets or watches while handling the balloon. Cotton gloves
are advised for proper handling and they also provide protection from
string burns while launching the balloon (several pair of jersey gloves
will be available). After filling the balloon, the nozzle will be twisted
and a cord will be tied around it, then after folding, it will be taped.
The cord gives us a loop to attach the load line (the line between the
'chute' and the balloon).
>
>The balloon should be about 6-8 feet in diameter at launch (it will expand
to 35 feet at burst). The parachute is multi-color (florescent red,
orange, yellow and green) 8 feet in diameter. This capsule will have shiny
metal looking sides (to show up on FAA radar). The sun will cast a spell
and make it brighter by reflection.
>
>Don & Cris Pfister, the scientists in charge, will have some equipment
(camcorder and camera) but will have their hands full with the balloon so
plan to bring yours. They further tell us they hope to have a camera on
the balloon taking pictures every so often....they also wish to have a
picture of our 'emerald city' (SNS). The plan is, to have 2 cameras on the
TV transmitter one looking down (about a 45* angle) and one looking up at
the parachute/balloon. The onboard computer will switch between the cameras
about every 9 minutes.
>
>Don Pfister, our meterologist predicts 163 minute flight, a range of 40
miles bearing 153 degrees from the launch pad. (This is an old prediction
from our last flight. New predictions will be provided daily. Stay tuned.)
>
>Faster ascent rates can be achieved by having greater than one pound
positive lift, this lowers the maximum altitude but keeps the capsule from
drifting so far. On the other hand, less positive lift will provide slower
ascents and higher maximum altitudes, but longer drifts (longer chases if
you love them, who does??)
>
>The Telemetry frequency will be 145.790MHZ. Transmission modes will be FM
packet for the telemetry frequency using the APRS (Automatic Position
Reporting System) format. Output power will be 100mW on 49MHz, 5 Watts on
145.79 MHz for the data. Our last flight was monitored by stations over 250
miles away, with three states reporting.
>
>Before the launch the transmissions will be monitored. Once the capsule
lifts in the air radio is the only contact with it.
>
>The assembled space vehicle will be lined up with the wind. The capsule
upwind and the balloon downwind. If there is any wind then the handlers
may have to run with the capsule to launch. Once it is launched wait to
see it go up into the sky, shimmering with the golden red rays of sun in
the wee hours of a Saturday morning. I can bet that you will not regret
getting up so early once you experience the trills of a launch to near
space!
>
>---

>
>For those of you that can't make it to the launch but have internet
access, you should be able to 'see' the data from the balloon via NETLAB by
telneting to www.netlab.org in don's lab, the APRS room. The data from the
balloon should stream on your screen. Contact me for more information. I
will try to get a decode file on the lab or provide it on the HABITAT web
page. We would like to thank NETLAB for their support!! Visit often!
>
>Do any of you have a digital camera? If so, we may be able to put digital

photos of the launch on the web right after the launch. If anyone can
capture the TV we could put those picture on the web too. Volunteers?
>
>WE also want to thank KNSP (Kansas Near Space Project) and Lloyd for all
their help, we couldn't do this without Lloyd. Lloyd has video, and single
frames, of their last balloon bursting at over 98,000 feet. It is really
worth seeing.
>
>From Lloyd's flight report, this was the flight reported on Channel 4 news:
>>I've started to put together the webpage for flight 98B. The still
>>images taken of the balloon burst are most excellent (if I may say
>>so myself).
>>
>>Check out the following link,
>>
>>http://www.ksu.edu/humec/knsp/98b.htm
>>
>>for the initial report.
>>
>>Lloyd
>>KNSP
>>
>
>Thank you all for your time. We should be e-mailing daily updates with
landing site predictions based on winds aloft. Please let me know if you
would like to receive these. Several of you this is your first notice from
us. If I don't hear back from you I will probably not send you anymore. I
don't want to be a spammer.
>
>We hope to have a few of the local media crews on site for the launch, but
none are promised. Please contact me if you need/want information.
>
>Don Pfister
>913 341 1368 voice/fax
>816 466 1501 pager
>
>
>
>
>
[Signature File]
Name=Don Pfister KA0JLF
HABITAT SkyLab
(High Altitude Basic Investigation Testing And Tracking)
Email=dpfister@kc.net or donp@netlab.org
http://www.netlab.org/habitat
http://www.kc.net/~dpfister
http://www.netlab.org/~donp
http://www.netlab.org:8888/ Visit the Lab in the Hobby wing. HABITAT being
built...

24. Re: [APRSSIG:25862] Re: Tac calls, another idea

From: Wes Johnston <kd4rdb@eagnet.com>
Date: Wed, 01 Jul 1998 20:03:18 -0400
To: k4hg@tapr.org, aprssig@tapr.org
Message-ID: <3.0.32.19980701200316.00de000c@gena>
Rendered body type: text/plain

hope this makes it to the SIG...

just like a symbol can be moved by many stations, (ie handed off from one
to another), so could the tactical call of a tracker...

same program code, just applied to stations...

At 02:17 PM 7/1/98 -0500, you wrote:
>>Here's my latest idea:
>>
>>Let the sending station define his perfered TAC call. We would appear on
>>screen as the call sign, but once the beacon text comes up, the optional tac
>>call sign would replace the call sign IF the software was in TAC pefered
>>display mode.
>>
>This really isn't any different than what we have now, but just reverses
>the role of the tac and mycall...instead of putting the tac call in the
>tnc and real call in the beacon, you reverse that. This is just a lot of
>extra work to reach the same place. It doesn't address the issue brought

>up by Ralph, namely how to reassign the tac call of a tracker moved from
>one vehicle to another.
>
>Keep trying...
>
>Steve K4HG
>
>
Wes
Email: mailto:kd4rdb@usa.net
APRS: http://www.qsl.net/kd4rdb/aprs.htm
A good traveler has no fixed plans and is not intent on arriving.

25. Starke, FL DIGI O/S due to lightning

From: BordingK@aol.com
Date: Wed, 1 Jul 1998 20:14:43 EDT
To: aprssig@tapr.org, fl-aprssig@tapr.org
Message-ID: <f0b34d6c.359ad0f4@aol.com>
Rendered body type: text/plain

The Starke, FL APRS digi is temporary out of service due to two lightning strikes within a week. None appear to have directly hit any of the components, but induced current has knocked it out.

Hope to have it up before the weekend.

de W5KNB
Ken

26. Re: [APRSSIG 25785]Tactical Callsigns

From: wo4u@juno.com
Date: Wed, 1 Jul 1998 20:47:08 -0400
To: aa8ei@eos.net, aprssig@tapr.org
Message-ID: <19980701.204709.12070.0.wo4u@juno.com>
Rendered body type: text/plain

Tony, AA8EI wrote several constructive comments concerning the ongoing debate about the display of tactical and/or Amateur Callsigns. My comments follow:

Tony,
I totally agree with your reply about the use and display of tactical calls. Somehow we MUST get the point across to the authors that it is NOT necessary or desirable to display both the Tactical and Amateur Callsigns at the same time on an APRS screen. I have tried to make the same points to various people since the beginning of this thread. Unfortunately, I have only had replies that rationalized the reason to display both on the screen. I appreciate the efforts of those that replied but after reviewing the comments, with a long term perspective of Emergency Management under my belt, I continue to feel very strongly that this issue must be debated to the bitter end.

Today I displayed a capture file from our most recent County Wide Exercise. The file included 14 Tactical Calls that had been transmitted as "objects" from a central point and displayed on monitors at several locations. Using a TV adaptor, I sent the display to a 48" monitor at our EOC. Everything looked great and we could easily view the entire County in adequate detail. I then overlayed Amateur Callsigns next to or below each of the Tactical Callsigns. The net result was a BIG MESS that had several calls overlapping each other and so much screen clutter that the Electronic Status Board was rendered almost useless.

I have worked for three years selling our local officials on the idea of using APRS as a primary tool for displaying the status of any local emergency. We have invested a lot of money on high quality (type accepted) commercial equipment and antennas. The entire Emergency Management Team has been supportive of this project on the basis that our Electronic Display is far superior to any hand drawn sketch on the dry marker board. But when I displayed the BIG MESS of needless Amateur Calls on the screen today several of the officials said "If that is what it is going to look like then we are no longer interested".

Bob, Mark, Keith, Brent, Steve and any others ... please let's take a practical approach to this subject. I hope none of the authors spend a lot of time programming features that will not be used because of the needless screen clutter that would result. Translation Tables or Display Options can take care of any Part 97 issues. Let APRS work for us not against us.

If I can add any detail to this subject or offer any other input please ask. I am sincerely interested in seeing this subject closed out with a useful solution.

Paul - WO4U

wo4u@juno.com

_____
You don't need to buy Internet access to use free Internet e-mail.
Get completely free e-mail from Juno at http://www.juno.com
Or call Juno at (800) 654-JUNO [654-5866]

27. NC to MS

From: Jay <jaykq4ms@ipass.net>
Date: Thu, 02 Jul 1998 04:40:49 -0400
To: aprssig@tapr.org
Message-ID: <3.0.5.32.19980702044049.0079d970@mail.ipass.net>
Rendered body type: text/plain

Just wondering if anyone saw my mobile yesterday (wednesday). Left Raleigh NC at 10:30AM eastern time and arrived in Hattiesburg, MS at midnight. Did anyone see my KQ4MS-14 Truck on I-40/I-85/I-20/I-59????. That is, From Raleigh to Charlotte, to Atlanta, to Birmingham, to Meridian, MS to Hattiesburg, MS????

28. KPC3 and a symbol

From: GStory@icomply.com
Date: Thu, 2 Jul 1998 07:44:38 -0500
To: aprssig@tapr.org
Message-ID: <F1C006463F86D111A7F900805FE2B3B3B9CB@lew_prods1.icomply.com>
Rendered body type: text/plain

Hi guys, I need to know if it is possible and how to set a symbol inside a older KPC3 (ver 5.1). We are going to be setting up a digi in Denton Texas in the next few weeks to a minth and I would like to be able to get a symbol on it. Thanks

Guy Story, KC5GOI
gstory@icomply.com
kc5goi@infospeedway.net

29. Re: [APRSSIG:25872] KPC3 and a symbol

From: Jeff Brenton <jeffb@espi.com>
Date: Thu, 02 Jul 1998 08:24:05 -0500
To: GStory@icomply.com
Cc: aprssig <aprssig@tapr.org>
Message-ID: <359B89F5.45E5@espi.com>
Rendered body type: text/plain

>I need to know if it is possible and how to set a symbol inside a
> older KPC3 (ver 5.1). We are going to be setting up a digi in
> Denton Texas in the next few weeks to a minth and I would like to be
> able to get a symbol on it

Send me the lat/long, power, height of antenna, antenna gain, and whether it is an omni or directional antenna, and I'll give you the BTEXT. It should be something like:

BT !0000.00N\00000.00W#PHG0000 Denton Wide/Relay digipeater

assuming that you set MYALIAS RELAY and MYNODE WIDE.

The \# combination will display a green star in APRS/WinAPRS/MacAPRS, with no overlay character (since none is warranted). If you upgrade the EPROM and set it up according to my web page on the KPC-3 and v8.2 software, you would change the backslash to an "N", to overlay an N on the star.

Once it is set up, let me know, and I'll get it included into DIGIS.POS; it's due for a refresh soon, since I've received two changes for it since last published.
--

Jeff Brenton, Ham radio call KA9VNV
http://www.espi.com
Questionable web page: http://www.dididahdahdidit.com
Covert supporter of the Vast Right Wing Conspiracy (tm)

30. Tactical Calls

From: "Brian McCarthy" <Brian_McCarthy-SC1966@email.mot.com>
Date: Thu, 02 Jul 1998 08:18:07 -0700
To: APRS Special Interest Group <aprssig@tapr.org>
Message-ID: <359BA4AF.6D97480B@email.mot.com>
Rendered body type: text/plain

Noting the discussion on Tacticals, I am coping a suggestion I gave to the Sprouls.

The trackers are deployed relatively quickly, and must be adjusted to reflect their tactical calls. What would be great is to not have to adjust the trackers for tactical calls. This could be done inside WINAPRS by setting up a screen, or a modification to the edit objects, to setup a relationship between real call sign and tactical call sign. Once this relationship is established, be able to activate tactical call

substitution on a per map basis. This will allow the real call signs be

transmitted over the air, but the WINAPRS operator would see the tactical calls on the map.

Since we will be running atleast 5 tactical displays separated by as much as 80-100 miles, it would be nice if the WINAPRS station could transmit a special packet, like the objects, that would update the relationship on the remote WINAPRS stations. This would allow our technical support personnel to install a tracker then enter the tactical

info into WINAPRS and net control would automatically be updated to used

the tactical call. There should also be a way to manually send all of the tactical calls should a new station be placed online. I guess it could also be schedule on the position rate dialog.

The last request is for station filtering on a per map level. Many of our tactical calls are like MEDXXX, RESXXX, MSXXX, NETXXX, APRSXXX. The

problem arises that it becomes very hard to visually seperate the trackers since there are so many in a relatively small area. Last year,

the request was made to filter the maps by unit type. This could be done by adding 8-16 filters that could appear on the button bar on the right of the maps. The filters would be setup to "MED" and "RES". when

the operator push this button, only units beginnig with "MED" and "RES" would be displayed on that map. The title on the button could also be configurable to allow the names to make sense to the operator. There should also be a button to remove the filters and the ability to have multiple filters active at one time.

Brian J. McCarthy
N7TUQ

31. [off topic, sri]: NASA video

From: "O.C. Winton wn1z" <wn1z@sojourner.wn1z.ampr.org>
Date: Thu, 02 Jul 1998 09:57:16 -0700
To: aprssig@tapr.org
Message-ID: <5807@babylon.wn1z.ampr.org>
Rendered body type: text/plain

Sorry for offtopic, if someone in amsat could pls tell me if there's a list i could subscribe to (or similar) that will keep me informed of when there will be video on NASA Select (ch. 9 of GE-2 satellite) so i can know when to tune it in. Thanks! New to C-band satellites; what fun!

Orrin wn1z
Monterey CA

32. Re: Saturdays weather forecasts

From: "Don Pfister KA0JLF <donp@jerryc.sound.net>" <donp@netlab.org>
Date: Thu, 2 Jul 1998 12:07:03 -0500 (CDT)

To: Don Pfister KA0JLF <dpfister@kc.net>
Cc: tapr aprssig <aprssig@tapr.org>, n0lrf@ott.net, JMalone920@aol.com,
EDawson553@aol.com, jerryc@netlab.org, bobdavis@cadvantage.com,
Bob K0FPC Davis <rdavis@nyx.net>, hmyers@qni.com, jim@preeminent.com,
pinoch@tfs.net, Byron Rieper <rieper@primary.net>,
Tom N0GSG <twheeler@tfs.net>, Stan KD0G Nelson <snelson@juno.com>,
ROCKINKS@aol.com, junejeffers@juno.com, chadwick@fsl.noaa.gov,
"JoAnn-E@Net-Lab International" <ewbankj@dmci.net>, stephenrd@aol.com,
jtm@MO.NET, kc5jgv@juno.com, jghall@ArkansasUSA.com,
stephen_rd@yahoo.com, kb0tvj@boulderneWS.infi.net,
n0dvg@mail.midusa.net, rsaxena@swbell.net,
Terri Harkness <tharkness@triplei.com>, apfister@kc.net,
pfister@rcia.com, rexp3@juno.com, jlhunter1@juno.com,
Lloyd Verhage <verhage@humec.ksu.edu>, weirwolf@sprintmail.com,
jim.dex@kc.net, SUSIE STITT <gs11441@navix.net>,
TMcCuiston@compuserve.com,
"JoAnn-E@Net-Lab International" <ewbankj@dmci.net>,
shandler@dorsai.org, richc@netlab.org, madmax2084@earthlink.net,
lizbeth@netlab.org, pfisterj_at_hsl48@airlant.navy.mil,
johndye@feist.com, gheislen@swbell.net, wallio@dsmnet.com,
purple@cdsnet.net, k0ozv@juno.com, n3kkm@kc.net, erbsurfer@aol.com,
mconner@mail.neonramp.com
Message-ID: <Pine.LNX.3.95.980702115801.15380B-100000@jerryc.sound.net>
Rendered body type: text/plain

Unfortunately I am postponing the launch that was scheduled for Saturday
the 4th, until Saturday July 18. There are several reasons. I am sorry for
the inconvenience, I hope there are no hard feelings.

For those that are interested we WILL conduct a TEST on Saturday July 4,
1998 at 7:30 a.m. I plan to simulate the launch (actually a repeat of our
last launch), so let me know if you are interested in this. This will be
both on the 145.79 MHZ and in NETLAB (don's Lab, APRS room). I will try to
set up HF voice (possibly an HF gate on 30M?).

Thanks for your support and understanding.
Don

33. RS 2M amp

From: Glenn Little <glittle@awod.com>
Date: Thu, 02 Jul 1998 14:53:40 -0400
To: aprssig <aprssig@tapr.org>
Message-ID: <359BD734.FE284918@awod.com>
Rendered body type: text/plain

Radio Shack has their 30W 2 meter amplifier (19-1122) on closeout.
Current price is $39.97.
5w in = 33w out.

Glenn Little
WB4UIV

34. Re: [APRSSIG 25785]Tactical Callsigns

From: n8exf@juno.com (R L BOEHM)
Date: Thu, 2 Jul 1998 15:05:01 -0400
To: wo4u@juno.com
Cc: aprssig@tapr.org
Message-ID: <19980702.153206.18230.1.N8EXF@juno.com>
Rendered body type: text/plain

I sure hope that I am not missing something here, I know this thread is
getting long. Am I wrong on tactical callsigns? I had hoped that when I
assign a callsign to a sagwagon or an Red Cross ERV or a Southern Baptist
chuck wagon that I could call the mobile "sag1" or "erv1" or "chow1" and
not be cluttered with a callsign. Who cares what the call sign is?? As
long as the TNC is sending a legal call, I sure do not need to know who
is the Ham driving (riding, or even loaning gear to) the thing, I just
want to see where the food is at.
Since most computer monitors on the job will most likely be 14 inch
monitors, having a FCC ID plus an job assigned ID cluttering the screen
will make for a real mess.

73 de Bob, N8EXF // KN
homepage   http://www.qsl.net/n8exf

Don't sweat the petty things, and don't pet the sweaty things

35. Re: [APRSSIG:25877] RS 2M amp

From: Jon Ogden <jono@enteract.com>
Date: Thu, 2 Jul 98 16:55:20 -0500
To: <glittle@awod.com>, <aprssig@tapr.org>
Message-ID: <199807022153.QAA01474@tapr.org>
Rendered body type: text/plain

>Radio Shack has their 30W 2 meter amplifier (19-1122) on closeout.
>Current price is $39.97.
>5w in = 33w out.
>
>Glenn Little
>WB4UIV

COOL!

73,

Jon
KE9NA

Jon Ogden

jono@enteract.com
www.qsl.net/ke9na

"A life lived in fear is a life half lived."

36. Re: [APRSSIG:25878] Re: [APRSSIG 25785]Tactical Callsigns

From: rwf <rwf@BSRG.org>
Date: Thu, 02 Jul 1998 18:42:43 -0400
To: n8exf@juno.com
Cc: aprssig@tapr.org
Message-ID: <Version.32.19980702184112.01080ab0@ccegate.cokecce.com>
Rendered body type: text/plain

As long as you use APRSplus, you can.
It works great.

N8EXF wrote:
 I had hoped that when I
>assign a callsign to a sagwagon or an Red Cross ERV or a Southern Baptist
>chuck wagon that I could call the mobile "sag1" or "erv1" or "chow1" and
>not be cluttered with a callsign.

37. Portable Digi

From: William Nolle <wa8inz@airnet.net>
Date: Thu, 02 Jul 1998 19:30:50 -0500
To: aprssig@tapr.org
Message-ID: <359C263A.47E8@airnet.net>
Rendered body type: text/plain

Again for those interested in my portable digi project, I now have the
completed Porta-Digi on my webpage. There's also a concept drawing
(Picture) of the digi with a 3 element yagi mounted on top (I'm working
on that). I used a Diamond RH205 antenna in the Porta-Digi.

http://www.airnet.net/wa8inz/

--
William Nolle [wa8inz]
wa8inz@Airnet.net
wa8inz@amsat.org
Hazel Green,AL
(The URL to subscribe or unsubscribe to the SIG the easy way.)
http://www.tapr.org/tapr/html/sigs.html

38. 440 Freq?

From: rbost@itexas.net (Roy Bost)
Date: Thu, 2 Jul 1998 20:12:53 -0500
To: "APRSSIG" <aprssig@tapr.org>
Message-ID: <000b01bda61f$b6188860$03000004@default>
Rendered body type: text/plain

Once again I'm considering creating a 2m-440 gate. Does anyone have any
idea of what freq to use? Especially in Texas?! The only band plan I can

find is in the ARRL Repeater Dir. Does anyone have any problem with 441.050
mHz?

Roy W Bost
N5TAM
rbost@itexas.net

39. Re: [APRSSIG:25882] 440 Freq?

From: rwa <rwf@BSRG.org>
Date: Thu, 02 Jul 1998 22:16:53 -0400
To: aprssig@tapr.org
Message-ID: <Version.32.19980702221650.01230b10@ccegate.cokecce.com>
Rendered body type: text/plain

Do not use the ARRL repeater directory!
They are not a coordinator or spectrum manager.

Contact your 440 Texas coordinator and start there!

The ARRL repeater directory does a disservice by publishing that dumb "band
plan", which was their suggested plan from years ago.

At 08:11 PM 7/2/98 -0500, you wrote:
>Once again I'm considering creating a 2m-440 gate. Does anyone have any
>idea of what freq to use? Especially in Texas?! The only band plan I can
>find is in the ARRL Repeater Dir. Does anyone have any problem with 441.050
>mHz?
>
>Roy W Bost
>N5TAM
>rbost@itexas.net
>

40. (no subject)

From: JDWalkerJr@aol.com
Date: Thu, 2 Jul 1998 23:55:49 EDT
To: aprssig@tapr.org
Cc: glittle@awod.com
Message-ID: <2b9846dc.359c5646@aol.com>
Rendered body type: text/plain

I went right out here in Macon, GA and bought the Radio Shack 30W 2 meter
amplifier (19-1122) on closeout for $39.97 per Glenn Little's tip. The
regular price was $99.00. Of course the power supply was an extra $100 but
I'm still very happy with the deal. It gives me a nice boost on RS-12. I can
hear the difference, and I think it's worth it. Thanks Glenn!

Jimmy Walker
WA4ILO

41. Re: [APRSSIG:25879] Re: RS 2M amp

From: Jon Ogden <jono@enteract.com>
Date: Thu, 2 Jul 98 23:11:03 -0500
To: <jono@enteract.com>, <aprssig@tapr.org>
Message-ID: <199807030403.XAA28068@tapr.org>
Rendered body type: text/plain

>>Radio Shack has their 30W 2 meter amplifier (19-1122) on closeout.
>>Current price is $39.97.
>>5w in = 33w out.
>>
>>Glenn Little
>>WB4UIV
>
Bought the last one at the RS near my office. Most stores probably only
have one or two left, so buy while they are hot, folks!

73,

Jon
KE9NA

Jon Ogden
KE9NA

http://www.qsl.net/ke9na

"A life lived in fear is a life half lived."

42. Re: [APRSSIG:25883] Re: 440 Freq?

From: Jon Ogden <jono@enteract.com>
Date: Thu, 2 Jul 98 23:15:11 -0500
To: <rwf@bsrg.org>, <aprssig@tapr.org>
Message-ID: <199807030407.XAA28291@tapr.org>
Rendered body type: text/plain

>The ARRL repeater directory does a disservice by publishing that dumb "band
>plan", which was their suggested plan from years ago.

The ARRL plan is a good guide, however. They do NOT state though that
they are the frequency coordinating authority. Many of the items will be
marked as "local option." Also, I believe that they even say to check
with a local coordinator to be sure have a clear frequency.

The band plan serves a purpose: It shows where the different sub-bands
are across the band to the end user (someone who is not setting up a
repeater or digi). It does nothing to say what frequencies are in use in
a given area. It would be foolish for anyone to put up a permanent
repeater or digipeater w/o checking locally first. That's also why they
publish the local coordinators' names in the directory.

73,

Jon
KE9NA

Jon Ogden
KE9NA

http://www.qsl.net/ke9na

"A life lived in fear is a life half lived."

43. Re: [APRSSIG:25883] Re: 440 Freq?

From: Jim Shepherd <NVJims@desertlinc.com>
Date: Thu, 02 Jul 1998 21:37:25 -0700
To: rwf@bsrg.org, aprssig@tapr.org
Message-ID: <3.0.5.16.19980702213725.4da76234@mail.desertlinc.com>
Rendered body type: text/plain

At 09:22 PM 7/2/98 -0500, rwa wrote:
>Do not use the ARRL repeater directory!
>They are not a coordinator or spectrum manager.
>
>Contact your 440 Texas coordinator and start there!
>
>The ARRL repeater directory does a disservice by publishing that dumb "band
>plan", which was their suggested plan from years ago.
>
>
>
>
Hi,
  The 440 Texas Coordinator had better be observing the ARRL bandplan.....
I've run into the problem in this area, and the local group, not following
the plan, has destroyed our packet system--we cannot connect to anyone.

Jim, N7WVZ

Jim Shepherd
Winnemucca, Nevada
NVJims@desertlinc.com

44. Re: [APRSSIG:25884] (no subject)

From: "Ray J. Vaughan" <rvaughan@gate.net>
Date: Fri, 03 Jul 1998 00:57:21 -0400
To: JDWalkerJr@aol.com

Cc: aprssig@tapr.org
Message-ID: <1.5.4.32.19980703045721.00c0c7b0@pop.gate.net>
Rendered body type: text/plain

At 11:01 PM 7/2/98 -0500, you wrote:
>I went right out here in Macon, GA and bought the Radio Shack 30W 2 meter
>amplifier (19-1122) on closeout for $39.97 per Glenn Little's tip. The
>regular price was $99.00. Of course the power supply was an extra $100 but
>I'm still very happy with the deal. It gives me a nice boost on RS-12. I can
>hear the difference, and I think it's worth it. Thanks Glenn!
>

I heard one a repeater today... and I hope you can confirm this... there's
some heilical filtering in it to cut down a bit on intermod. Any truth to that?

Ray, KD4BBM

45. Print Messages Problems

From: kd4ydc@juno.com (Robert W Burton)
Date: Fri, 3 Jul 1998 01:11:53 -0400
To: aprssig@tapr.org
Message-ID: <19980703.011200.3214.0.KD4YDC@juno.com>
Rendered body type: text/plain

Ok Folks,
I need some help. We are running 816 at the NWS in Peachtree City, Ga.
We have the display set for WX stations only. Also the "print messages"
command is set. We have had garbage print that was not intended for
NWSPTC. Sometimes it will print stuff out that has bulls listed with
BN#'S instead of BLN#'S. Sometimes ascii text. Sometimes a call
sign, date and time stamp with a 0} printed as the text. The
problem that we are running into (besides the printing garbage)
is that the light / buzzer combo on the printer is getting cut
off by the staff (I think it is 1 person :-( ) when this happens.
PLEASE !!!! Bob....somebody help us out! We have a brand
new IC-2000H that was donated for packet and I want to
show it off to the staff and others (won at Shelby by a 13yr
old...young hams, their our future!).
Thanks for the space!
Robert Burton
KD4YDC
AEC ARES / NWS in Peachtree City, Ga.

_____
You don't need to buy Internet access to use free Internet e-mail.
Get completely free e-mail from Juno at http://www.juno.com
Or call Juno at (800) 654-JUNO [654-5866]

46. Field Day Digital Rules - Thoughts or Comments ?

From: "Greg Jones, WD5IVD" <wd5ivd@tapr.org>
Date: Fri, 3 Jul 1998 01:48:55 -0500
To: "APRS SIG list   mailing"<aprssig@tapr.org>,
        "NETSIG list   mailing"<netsig@tapr.org>
Cc: " TAPR SYS "<tapr-sys@tapr.org>
Message-ID: <v04003a0fb1c22eb473ec@[207.8.125.50]>
Rendered body type: text/plain

If you have any suggestions on how the field day rules might be better
written to reflect digital operations, please drop me a private e-mail on
the subject.

I am collecting thoughts on the matter for some upcoming discussions on the
subject.

Cheers - Greg, WD5IVD

Greg Jones, WD5IVD   Austin, Texas
wd5ivd@tapr.org   http://www.tapr.org/~wd5ivd

Real World, The n.:
        5. Anywhere outside a university. "Poor fellow, he's left UT
Austin and gone into the real world."

47. Tac calls, yet another idea

From: aa8ei@eos.net
Date: Fri, 3 Jul 1998 05:06:06 -0400

To: APRS SIG <aprssig@tapr.org>
Message-ID: <l03130304b1c246514cee@205.133.149.191>
Rendered body type: text/plain

< Let the sending station define his preferred TAC call.
< But IF you're in TAC preferred mode
< This gives the sender some control, let's the viewer decide which one he
wants, and keeps the real call on the air.
< if the software has a local TAC display table, settings there
would override all of that.
< Ray, KD4BBM

Good ideas.

If it's reasonable that only displaying stations care about tac calls, letting anyone set the call is a good idea. Net discipline should prevail, so there will be control during any event.

The "Tac Preferred" Mode be enabled, I suggest, by:
A "display tac calls" toggle along with the "display calls" toggle under "Display" menu, to enable one, both or none.
A "display tac calls only" toggle added under "Station Display Mode" menu, to enable removing all but the event desired (additional tac calls heard would probably be out of the map scale displayed so distant events wouldn't compete much, but lurkers would get to watch them all).

Another category in the "Message List" "New Message" window(s): "Tactical"
A message sent under the Tactical category would just be a modified "Bulletin" with the frequency of transmission changed and a "this is a tactical call bulletin" prefix added. The format for the tac call entry could be "tac call,[comma]real call" and the prefix auto concatenated.

This could be done as a multiline cut and paste from a small scratch text file at the beginning, by the NTS, to get out the first assignments, or by individual stations as they come on-duty.

When received, the "tac" bulletin would generate a tac table entry. An automatic screen update would follow a parsing of the table to see if the entry exists and is the same (no change), is different (refresh screen) or is new (refresh screen).

The tactical call emanates from the table, not a position statement or beacon. Unless enabled, the tac call does not appear, unless the sending station places THAT call instead of a 'real' call in the "Station Settings" window.

No TABLES need be entered by each station, so the source of errors can be diminished to an "authorized" station, presumably the NCS for the event. If there is a typo error or a tracker or duty operator is switched, it's changeable by simply reissuing the bulletin with the correction.

If necessary, security measures could be added to remove individual station data entry. Everyone involved in a "high security" event could get the security info (by secure means) and apply it to each station. In a "display secure tac only" mode, only bulletins with the moxie would be displayed. Of course, this bit of paranoia would entail encrypting the bulletin, but what the hay! One never knows. I can think of an excellent "security" application right now and I am sure there are others.

If desired, individual software could not implement the 'tac' option, in which case the only call displayed would be the 'real' call.

73, Tony

48. Re: [APRSSIG:25886] Re: 440 Freq?

From: rwf <rwf@BSRG.org>
Date: Fri, 03 Jul 1998 08:35:49 -0400
To: jono@enteract.com, aprssig@tapr.org
Message-ID: <Version.32.19980703080213.01254430@ccegate.cokecce.com>
Rendered body type: text/plain

I am replying to Jon's message here, and including a reply to Jim Shepherd as well.

Jon- (and all the other folks reading who are contemplating setting up on 440)-

Although the ARRL Repeater Directory is a good guide, as Jon says- They do not even closely represent the various "sub-bands" as you call them. For example, take a look at what they represent as link and simplex in 440. Now go see what the Coordinators in various areas have adopted within their

various regions. It is pretty easy to find, as most major Coordinators have WWW pages now.

True- they all agree on 446.0 and 146.52, I think. Plus there are a few others that have to remain (like the freqs reserved for Satellite operation in 440, and the 2 or 3 areas that are Part 97 prohibited for repeater inputs or outputs). But you will see wide differences between areas on other things (like packet frequencies)!

Yep- you are even correct in that they recommend for a user to check with their Coordinator. That statement is enough. The inaccurate portrayal of the Repeater Directory band plan has caused more harm than good. The more appropriate info to have there would be similar to:

BANDPLANNING INFO

Part 97 of the FCC Rule prohibit repeater input and outputs within the band segments xxxx-yyyyy and aaaa-bbbbb, etc. They also restrict ddddd-eeeeee to operation with Satellites only. For any other use- you must contact your local Coordinator/Spectrum Manager. The latest information we have as to who they are follows:

That is really all they could realistically do and remain accurate. Publishing any kind of suggested band plan implies that they are setting a standard or guideline, which they are not doing and do not intend to do!

Per FCC rules- you can almost put almost anything anywhere unless it is prohibited. Very little is expressly prohibited. But if you cause interference (and you have a very good chance- because everything isn't published), you must correct it. You will waste a lot of your other peoples time as well as you own if you go the trial-and-error route.

If you don't believe me, check the ARRL list for the 445 MHz area. Now go see what it is used for in different parts of the Country. In SERA territory, 445 has a lot of packet, while in other areas (and in the APPRL guide, I think) it shows links and simplex. SERA has their links in the 446 MHz area. I'm going from memory here so please check for yourself. Take a look at 6 meters. There are several band plans and at least 3 different repeater splits. Ev's 53.53 is used for packet simplex in SERA land, but in at least one other area it is a repeater input.

The "band plan" in the Repeater Directory is useless and creates many problems, all the time. Although they suggest checking locally, many folks do not.

Best thing to do (and Jon and I agree on that) is to check locally first. A good place to start is with the list of Coordinator's addresses as published by the ARRL in the Repeater Directory. Also check the Web.

Jim said: "Hi,
  The 440 Texas Coordinator had better be observing the ARRL bandplan..... I've run into the problem in this area, and the local group, not following the plan, has destroyed our packet system--we cannot connect to anyone."

Maybe the problem is really that the local group is observing the ARRL "band plan", while Texas may have one that differs.

I have no idea how the Texas 440 band is laid out, or whether they adopted any portion of the League' suggested "band plan". If your State is done anything like it is done in the 8 SERA states, then your packet coordinator (if there is one) will assign/approve frequencies from within a segment that has been identified by the Coordinating body. We did NOT adopt the Leagues plan.

Maybe some of the reason you "cannot connect to anyone" is the same as in the rest of the Country. Conventional packet is getting less popular. There are a lot less nodes and conventional packet stations operating nowadays. APRS appears to be the most prevalent in many areas, and certain areas have a bit of other conventional activity (like Buck's SEDAN as well as the ROSE networks and the PacketCluster(tm) systems used in some places). I remember a TEXNET system too, haven''t heard much of it in a while.

Always start with the Coordinator. Do not trust the ARRL "band plan" as

being correct for your area.

Ralph Fowler
Technical Advisor
SERA (The largest Coordinator in the USA)

49. Radio Shack Amplifier

From: JDWalkerJr@aol.com
Date: Fri, 3 Jul 1998 08:44:02 EDT
To: rvaughan@gate.net, aprssig@tapr.org
Message-ID: <49769de8.359cd214@aol.com>
Rendered body type: text/plain

In a message dated 7/3/98 1:20:51 AM Eastern Daylight Time, rvaughan@gate.net
writes:

> helical filtering

Yes, I can confirm that it has such a feature. The book describes it as a
"double tuned helical band pass filter to reduce out-of-bank interference by
allowing the received frequencies in the 144-148 band to easily enter the
receiver but attenuating all other frequencies."

It also has a "low noise GaAs field effect transistor preamplifier."

Jimmy Walker
WA4ILO
Macon, GA

50. Re: [APRSSIG:25888] Re: (no subject)

From: Jon Ogden <jono@enteract.com>
Date: Fri, 3 Jul 98 09:02:55 -0500
To: <rvaughan@gate.net>, <aprssig@tapr.org>
Message-ID: <199807031355.IAA16513@tapr.org>
Rendered body type: text/plain

>I heard one a repeater today... and I hope you can confirm this... there's
>some heilical filtering in it to cut down a bit on intermod. Any truth to
>that

Yes. There is a helical receive filter with a compensating preamp. The
manual just calls it a double tuned helical with no other specs. I
suspect it's a very lossy filter which is why they have the preamp. The
net gain of the preamp/filter combo is zero.

73,

Jon
KE9NA

Jon Ogden
KE9NA

http://www.qsl.net/ke9na

"A life lived in fear is a life half lived."

51. Re: [APRSSIG:25886] Re: 440 Freq?

From: Jon Ogden <jono@enteract.com>
Date: Fri, 3 Jul 98 09:10:01 -0500
To: "rwf" <rwf@BSRG.org>, <aprssig@tapr.org>
Message-ID: <199807031402.JAA16835@tapr.org>
Rendered body type: text/plain

> For
>example, take a look at what they represent as link and simplex in 440. Now
>go see what the Coordinators in various areas have adopted within their
>various regions.   It is pretty easy to find, as most major Coordinators
>have WWW pages now.

[snip]

>If you don't believe me, check the ARRL list for the 445 MHz area.   Now go

>see what it is used for in different parts of the Country.

I believe both of these examples are places where the ARRL plan specifies
"local option." Same is also true on some of the ATV vs. repeater output
frequencies.

The ARRL plan is useful to find out where beacon sub-bands are, where an
SSB sub-band or calling frequency is, rougly where packet is, etc.
Again, I think for the end-user it serves a general purpose. But for
repeater/digi operators, I wholly agree with Ralph. Using the ARRL plan
indiscriminantly will cause more harm than good.

73,

Jon
KE9NA

Jon Ogden
KE9NA

http://www.qsl.net/ke9na

"A life lived in fear is a life half lived."

52. Re: RS amp's preamp...

From: Dave Hockaday VROC #940 <wb4iuy@amsat.org>
Date: Fri, 3 Jul 1998 10:25:43 -0400 (EDT)
To: aprssig@tapr.org
Message-ID: <199807031425.KAA12016@earth.ipass.net>
Rendered body type: text/plain

>>I heard one a repeater today... and I hope you can confirm this... there's
>>some heilical filtering in it to cut down a bit on intermod. Any truth to
>>that
>
>Yes. There is a helical receive filter with a compensating preamp. The
>manual just calls it a double tuned helical with no other specs. I
>suspect it's a very lossy filter which is why they have the preamp. The
>net gain of the preamp/filter combo is zero.

I have a few of these amp, used on local BBS and APRS nodes and my home
station. There is a 2 stage helical, and the net gain out of the box is
about 0-2 db as measured on my network analyzer. The helical rolls off
pretty sharply after about 1 mhz above and below the 2m band.

Since I couldn't stand to _not_ turn screws in the helical, I decided to
tune them to the specific freq of the nodes. The helicals will peak up
sharply, and the net gain of the preamp through the helicals, when tuned
this way, is between 6-10db (varying results from unit to unit).

The noise figure isn't too good, though... I've found that my weak signal
decode on packet is a little better with the helical/preamp circuitry
completely bypassed, as opposed to either untouched factory tuning or after
tweaking. Good little amp, though.

Just my $.02 worth,
Dave WB4IUY

53. Re: [AO16APRS:42] AO-16 data received

From: Bob Bruninga <bruninga@nadn.navy.mil>
Date: Fri, 3 Jul 1998 10:41:05 -0400 (EDT)
To: ao16aprs@tapr.org
Cc: aprssig@tapr.org
Message-ID: <Pine.SOL.3.96.980703103441.4826A-100000@arctic>
Rendered body type: text/plain

Im on family holiday in FLorence Alabama, and although there used to be an
APRS network down here a few years ago, It has dried up completely and so
I am glad we are making some progress on AO-16 so I can get back in from
Alabama. ALso overnight some DX packets did come in and I am glad to see
Mississippi and Tennessee surrounding us with APRS network. Now, If I can
just get NW ALA to put up a digi to link across between GA and MS.

WB4APR

54. Digipeater for APRS

From: "myrt webb" <mwwebb@cyberport.net>
Date: Fri, 3 Jul 1998 09:27:03 -0600
To: "APRSSIG" <aprssig@tapr.org>
Message-ID: <01bda697$08028fa0$28801bce@mwwebb.cyberport.net>
Rendered body type: text/plain

What is involved i.e. time, trouble and $$, in putting up a digipeater for APRS??

---

55. Re: DosWindows95

From: Bob Bruninga <bruninga@nadn.navy.mil>
Date: Fri, 3 Jul 1998 11:44:10 -0400 (EDT)
To: Bob Merchant <KB8AST@mwweb.com>
Cc: Bob Bruninga <wb4apr@amsat.org>, aprssig@tapr.org
Message-ID: <Pine.SOL.3.96.980703114230.7901C-100000@arctic>
Rendered body type: text/plain

I dont have a win-95 machine handy. I thought it would run fine in full screen mode. But you are right, that I dont think it will run in a window. Are you sure it used to?

 On Thu, 2 Jul 1998, Bob Merchant wrote:

> Hi Bob, I've been out of the APRS activity for a while and now want to get
> back into it. It seems to me when I left about 2 years ago, it was possible
> to run DosAPRS in a MS-DOS window with Windows95. I have tried to run the
> current version but am not able to keep it confined to a MS-DOS window. I
> am trying to run two different Amateur Radio applications on the same
> machine using the multi-tasking abilities of Windows95 to get both running
> at the same time. Only problem I am having is keeping DosAPRS in a window.
> It wants to come up and use the full screen, leaving no area for
> boundaries. I have tried WinAPRS but have decided I do not like the way it
> presents itself on the screen...no roads, no streams, zilch ... makes for a
> very uninteresting display when visitors come into the shack. Have you
> determined what configuration is necessary to permit DosAPRS to run inside
> a window?
>
> G. Robert Merchant
> 440-259-3555
> 3360 River Road
> Perry, Ohio 44081-9622
>
> <KB8AST@mwweb.com>
>

APRSdos REPLY/COMMENT:

Reply mail addr: wb4apr@amsat.org
US mail address: 115 old Farm Ct, Glen Burnie, MD 21060
See DAYTON97 HISTORY: http://web.usna.navy.mil/~bruninga/dayton.html
See Maryland APRS LIVE: http://web.usna.navy.mil/~bruninga/aprs.html
See GPS on ANY radio: http://www.tapr.org/tapr/html/mic-e.html

---

56. Re: [APRSSIG:25897] Re: [AO16APRS:42] AO-16 data received

From: William Nolle <wa8inz@airnet.net>
Date: Fri, 03 Jul 1998 10:51:50 -0500
To: aprssig@tapr.org
Message-ID: <359CFE16.49A@airnet.net>
Rendered body type: text/plain

Bob Bruninga wrote:
>
> Im on family holiday in FLorence Alabama, and although there used to be an
> APRS network down here a few years ago, It has dried up completely and so
> I am glad we are making some progress on AO-16 so I can get back in from
> Alabama. ALso overnight some DX packets did come in and I am glad to see
> Mississippi and Tennessee surrounding us with APRS network. Now, If I can
> just get NW ALA to put up a digi to link across between GA and MS.
>
> WB4APR

Sorry to say Bob it's just to far to hit you direct at 68 miles. I don't know what you are running?. Altough I can hit KD4TJN-3 in Memphis you are also way to far from it I guess. I have had my beams pointing your way for two days and have also attempted to ack a message to you with no luck. I realy should be able to hit you direct since I have no problem hitting voice repeaters in Florence,AL. Yes it would be great to have a digi midway between Huntsville and Memphis but don't see that happening

in the near future.

--
William Nolle [wa8inz]
wa8inz@Airnet.net
wa8inz@amsat.org
Hazel Green,AL
(The URL to subscribe or unsubscribe to the SIG the easy way.)
http://www.tapr.org/tapr/html/sigs.html

57. Re: DosWindows95

From: "Rich Mazzeo" <n3xku@erols.com>
Date: Fri, 3 Jul 1998 14:03:44 -0400
To: "APRSSIG" <aprssig@tapr.org>
Message-ID: <001801bda6ac$ef2e0c00$5da3accf@richmazz>
Rendered body type: text/plain

I am having the same problem here, as soon as I try to put DOS APRS into
a window it will ignore the com port, and when I put it back to full screen
it continues operation normally. The same thing happens when I put it in
"Doze" mode and minimize it, it willignore the comport until it is full
screen again. I used to have it minimized for hours on end with no problem
in previous versions.
    Strange...

>I dont have a win-95 machine handy. I thought it would run fine in full
>screen mode. But you are right, that I dont think it will run in a
>window. Are you sure it used to?
>
> On Thu, 2 Jul 1998, Bob Merchant wrote:
>
>> Hi Bob, I've been out of the APRS activity for a while and now want to
get
>> back into it. It seems to me when I left about 2 years ago, it was
possible
>> to run DosAPRS in a MS-DOS window with Windows95. I have tried to run the
>> current version but am not able to keep it confined to a MS-DOS window. I
>> am trying to run two different Amateur Radio applications on the same
>> machine using the multi-tasking abilities of Windows95 to get both
running
>> at the same time. Only problem I am having is keeping DosAPRS in a
window.
>> It wants to come up and use the full screen, leaving no area for
>> boundaries. I have tried WinAPRS but have decided I do not like the way
it
>> presents itself on the screen...no roads, no streams, zilch ... makes for
a
>> very uninteresting display when visitors come into the shack. Have you
>> determined what configuration is necessary to permit DosAPRS to run
inside
>> a window?
--
Rich Mazzeo, N3XKU, Fairless Hills, PA
Bucks County SkyWarn and A.R.E.S.
TNC is on >144.390<, Automatic Position Reporting System (Mailbox: -2)
FM Voice: 147.300+ / 147.150+ / 146.970- / 444.200+ / and 146.535 / 446.025
smplx
ICBM/APRS: =4010.25N/07450.69W- (Grid: FN20ne) Currently Running: WinAPRS
2.20

58. high temp warnings etc...

From: kd4emi@juno.com (Michael A Kantor)
Date: Fri, 3 Jul 1998 14:24:57 -0400
To: aprssig@tapr.org
Message-ID: <19980703.142458.3302.3.kd4emi@juno.com>
Rendered body type: text/plain

I have my high temp alarm at 100 and it has been going off all week !!
(florida)

#2 Lets say there is a line of T storms that I want to post. Instead of
the
T storm symbol, is there a way to draw a LINE and have that line at a
certain angle and have it go a certain speed....? eg:
   /
  /
 /   -->
/

#3 I am running a triathelon race in 2 weeks. Will have APRS on my body
(every 5 min xmit) digi'd through a gateway to HF in my car. (only for
the bike and running part, not the swim) Will give details just before
the race. I dont know how long the car battery will last so I working out
some details on that..

Mike KD4EMI@JUNO.COM

Mike KD4EMI@JUNO.COM

_____
You don't need to buy Internet access to use free Internet e-mail.
Get completely free e-mail from Juno at http://www.juno.com
Or call Juno at (800) 654-JUNO [654-5866]

59. Re: [APRSSIG:25898] Digipeater for APRS

From: Jeff Brenton <jeffb@espi.com>
Date: Fri, 03 Jul 1998 13:59:40 -0500
To: mwwebb@cyberport.net
Cc: aprssig <aprssig@tapr.org>
Message-ID: <359D2A1C.1422@espi.com>
Rendered body type: text/plain

myrt webb wrote:
> What is involved i.e. time, trouble and $$, in putting up a
> digipeater for APRS??

Loaded question, Myrt! It depends upon the company your digi will be
keeping, and your spare parts capabilities...

Flat-out minimum for a digi, located away from sources of (and potential
victims of) RF interference, is an antenna, an HTX-202 HT, a Kantronics
KPC3 TNC (preferably with version 8.2 software), 12v power, and a place
to put them all. This would be for a tower that doesn't have any other
2m or VHF high band gear on it. Parts cost under $500 new, much less if
you buy used.

On a site with a lot of gear, where you might have to share an antenna,
the cost of the radio goes up (for one with better intermod resistance,
and better suppression of off-frequency transmit products), and you need
to use sharp filters and other specialized gear to make it work.
Sometimes, there isn't any way to work it out - and you have to find
another tower to live on.

If it's set up properly, the _time_ aspect can be minimul - it's only
when something goes wrong that most digis are worked on. And having
spares for everything can help minimize down time in the event of
something being blown apart by lightning...

--

Jeff Brenton, Ham Radio call KA9VNV
Questionable web page: http://www.dididahdahdidit.com
Selling some toys: http://www.espi.com/ForSale.html

60. Re: [APRSSIG:25888] Re: (no subject)

From: Earl Needham <kd5xb@amsat.org>
Date: Fri, 03 Jul 1998 13:06:46 -0600
To: aprssig@tapr.org
Message-ID: <3.0.3.32.19980703130646.03c14980@mail.pdrpip.com>
Rendered body type: text/plain

At 12:00 AM 7/3/98 -0500, Ray J. Vaughan wrote:
>At 11:01 PM 7/2/98 -0500, you wrote:
>>I went right out here in Macon, GA and bought the Radio Shack 30W 2 meter
>>amplifier (19-1122) on closeout for $39.97 per Glenn Little's tip. The
>>regular price was $99.00. Of course the power supply was an extra $100 but
>>I'm still very happy with the deal. It gives me a nice boost on RS-12.
I can
>>hear the difference, and I think it's worth it. Thanks Glenn!
>>
>
>I heard one a repeater today... and I hope you can confirm this... there's
>some heilical filtering in it to cut down a bit on intermod. Any truth to
that?

        The box is labelled "Helical Receive Filter With Compensating

Preamplifier". The inside cover of the manual states "Double Tuned Helical
Band Pass Filter -- reduces out-of-band interference by allowing the
received frequencies in the 144-148 MHz band to easily enter the receiver
but attenuating all other frequencies."

        It might help in big cities, but it won't do anything out here. Except
prevent me from receiving the local police on the 02AT, of course! <G>

        Earl

Earl Needham, KD5XB   mailto:KD5XB@AMSAT.ORG
Clovis, New Mexico   DM84 N34.403 W103.334
Registered: APRS/DOS & WinAPRS

61. Frequency Map

From: Jeff Reinhardt <jreinh@ix.netcom.com>
Date: Fri, 03 Jul 1998 16:27:01 -0700
To: aprssig@tapr.org
Message-ID: <359D68C5.6080@ix.netcom.com>
Rendered body type: text/plain

What is the URL for the APRS map that shows (in color) the APRS
frequencies in use in various parts of the country?

Thanks,

Jeff AA6JR

62. Re: [APRSSIG:25905] Frequency Map

From: Jeff Brenton <jeffb@espi.com>
Date: Fri, 03 Jul 1998 19:04:30 -0500
To: jreinh@ix.netcom.com
Cc: aprssig <aprssig@tapr.org>
Message-ID: <359D718E.1F27@espi.com>
Rendered body type: text/plain

Jeff Reinhardt wrote:
> What is the URL for the APRS map that shows (in color) the APRS
> frequencies in use in various parts of the country?

http://www.dididahdahdidit.com/aprsfreq.htm

Or, for a text-only version, with more detail on rumors:

http://www.dididahdahdidit.com/APRSFRQT.HTM
--

Jeff Brenton, Ham Radio call KA9VNV
Questionable web page: http://www.dididahdahdidit.com
Selling some toys: http://www.espi.com/ForSale.html

63. New DIGI files

From: Jeff Brenton <jeffb@espi.com>
Date: Fri, 03 Jul 1998 20:47:52 -0500
To: DigiOwners <digiowners@lounet.com>
Cc: aprssig <aprssig@tapr.org>
Message-ID: <359D89C8.51E4@espi.com>
Rendered body type: text/plain

The latest update to DIGIS.POS and DIGIS.LOG (the Win/MacAPRS enhanced
version) has just been posted to the Questionable web page. Direct links
are:

http://www.dididahdahdidit.com/text/digis.pos
http://www.dididahdahdidit.com/text/digis.log

These files list the 342 REPORTED APRS digipeaters in the US, Canada,
and certain other countries. If you know of others, please check out the
rules of submission (http://www.dididahdahdidit.com/digirules.htm) and
let me know about them.
--

Jeff Brenton, Ham Radio call KA9VNV
Questionable web page: http://www.dididahdahdidit.com
Selling some toys: http://www.espi.com/ForSale.html

64. APRS Weather Reporting

From: Ron Malinowski <weather@xnet.com>
Date: Fri, 03 Jul 1998 21:30:28 -0500
To: aprssig@tapr.org
Cc: k4hg@tapr.org
Message-ID: <3.0.5.32.19980703213028.007bed00@quake.xnet.com>
Rendered body type: text/plain

Dear People of APRS,
I have always had a delema of the Peet Bros weather station, being used a remote
weather station interfaced with a KPC. for 2 reasons: one you dont get the peak wind gust unless you transmit in converse mode very 5 minutes, and you dont get the rainfall for the last hour. Which you can if you interface it with the computer and I think those two missing parameters are important, so what I proposed and me and steve thought of but wasnt to supportive in the people making it, was a Wx Encoder, like the MicEncoder, that takes the data from the GPS, and sends the latest, well what I had proposed is make this device with a controlable transmit rate knob on the front, lets say you can choose 4,6,8,10,12,14,16,18,20 minutes or whatever the knob selector allows you to choose and the device would read all the current data, compute the average wind speed and the peak that occured since last transmit, and send that along with other current parameter and also track the rainfall so you get the hourly and 24 hour rainfall also... Well this isnt currently in the making either, so I thought about the KTU weathernode that Kantronics made, hey make that support APRS, well this was the reply I got from Phil from Kantronics, and I think if someone is knowledgable from his response, I think maybe we can make something do what we would like a remot station to report, please I would like to see input and I can forward all to Phil, and will see what happens.
Here is what he wrote.
Ron.....

Why don't you write out what you could do with just two A/D inputs to the KPC-3+ or the KPC-9612+.....perhaps we could add code to use those two inputs. We did not sell enough KTU weathernodes to justify the expense of development.....but perhaps if guys had their own sensors....we could add a few commands to take in the A/D inputs and then put that stuff in a special beacon....we do right now send a beacon that takes in these inputs....look at that.....

Yes...hope to see you at the AES 7/25.....I think (think) we'll have the GPs-TX transmitter kits ready.....if the pcb house gets them done in time....thinik so.....units has been designed....and laid out.....

73s. Phil.

Phil Anderson W0XI
Kantronics
1202 E 23rd Street
Lawrence, KS 66046
website www.kantronics.com
e-mail pandersn@kantronics.com
785-842-7745
fax 785-842-2031.

65. Re: Mapfix35

From: Arte Booten <n2zrc@webspan.net>
Date: Thu, 02 Jul 1998 18:58:11 -0400
To: dchapman@pacbell.net
Cc: aprssig@tapr.org
Message-ID: <359C1081.1E55C537@webspan.net>
Rendered body type: text/plain

Hi all,

Dave Chapman wrote:

>... Who created Mapfix35 and does anyone have his email address?

     Yea, the Great Oracle of Glen Burnie in his infinite wisdom did, in the beginning, create APRS on the first day.

     And it was good.

     Then there was evening, and then there was morning on the second day. The Great Oracle heard packets on the Ether, and realized that he needed maps.

So he scribed some with his own hand. They were crude and unfinished, but accomplished the task.

And they were okay. And there was evening, and morning followed on the third day.

On this day The Great Oracle found there were bugs in his works from the first day and decided to correct them.

And it was good. And the morning followed the evening on the fourth day.

This was the day that his ISP came back online, and he came to know FTP, and the Great Site of the USGS.

And it was great!

So The Great Oracle spent the rest of the fourth and fifth days making new maps of the world. And then He made a maplist.

And they were pretty good, but some of them were too big, and some of them were flawed, and yet others were innacurate ... due to the data, not His efforts.

So on the sixth day He created MapFix 1. And it was good.

And night passed to morning on the seventh day, when He experienced His first packet collision.
--
Arte Booten <n2zrc@webspan.net> EC/RO for Bronx County, NYC ARES/RACES
PGP Key Fingerprint: 22E5 3EC7 4E3C 2460 C570 BACA E48B 71D5 0F33 54AD
Riverdale, NY [FN30bu]   Cruise Missile Coordinates: 4052.71N/07354.06W
    TM-V7a/KPC-3 6.0/GPS-III Packet: N2ZRC@KB2VLX.#BRONX.NY.USA.NA
                            ICQ # 1676586
   "There is an undetonated Chroniton Torpedo lodged in the hull."
   "Do not attempt to disarm it until I arrive." "Arrive quickly!"
      -Seven of Nine & Tuvok, Star Trek: Voyager; "Year of Hell"

66. Re: 817 under Win95

From: Joe Foor <kf4dys@wfeca.net>
Date: Fri, 03 Jul 1998 19:36:16
To: aprssig@tapr.org
Message-ID: <3.0.5.16.19980703193616.32df2aa6@pop.wfeca.net>
Rendered body type: text/plain

I routinely run APRSdos in a window under Win95. I had not seen the problem described, where APRS stops showing incoming packets.

Normally, I have several windows open, with no window maximized and APRS817 showing the (V)iew packets screen. I played around a little with it and found that when I maximize my Netscape window, the APRS in a background window, stops showing any incoming packets. It also does this when I maximize other windows. As long as none of the windows are maximized, APRS817 continues to display incoming packets, whether the APRS window is in the background or the foreground.

Regards, Joe Foor   kf4dys@wfeca.net
http://www.wfeca.net/~kf4dys/books.html (got some books to trade?)

Global Warming: The natural process, by which the earth returns to it's normal climate, in the aftermath of an ice age.

67. Weather stations and APRS Plus

From: Jeff Brenton <jeffb@espi.com>
Date: Fri, 03 Jul 1998 22:36:31 -0500
To: aprssig <aprssig@tapr.org>
Cc: "B. Hildebrand" <bhildebrand@worldnet.att.net>
Message-ID: <359DA33F.3747@espi.com>
Rendered body type: text/plain

KC9CI (mailto:phillipr@execpc.com) sent me the following plea for help via APRS tonight:

"HOW DO I HOOKUP WEATHER STATION TO APRS+SA"

I had to reply that I had no idea, since I don't have APRSPlus, so mayhaps some can give him a hand? He didn't say WHICH weather station, unfortunately...
--

Jeff Brenton, Ham Radio call KA9VNV
Questionable web page: http://www.dididahdahdidit.com
Selling some toys: http://www.espi.com/ForSale.html

68. Re: APRS and LINUX

From: "Basil Davoren" <b.davoren@clear.net.nz>
Date: Sat, 4 Jul 1998 21:08:18 +1200
To: <aprssig@tapr.org>
Message-ID: <199807040917.VAA05364@fep2-orange.clear.net.nz>
Rendered body type: text/plain

Steve Dimse K4HG asked if Richard Parry,s article on GPS,APRS and LINUX was
available "on Line" following its publication in the JULY issue of the
LINUX JOURNAL.

Not to my knowledge, but here are several URL,s that may help...

http://www.linuxjournal.com/
 The home page with access to on-line index of articles from back
issues,on-line tables of contents and selected articles from back issues.

http://www.linuxgazette.com/
 The on-line magazine which includes Linux tips and articles.

http://www.linuxresources.com/
 A general directory of Linux resources including pointers to other sites.

Hope this helps

Regards
Basil,ZL2UT
b.davoren@clear.net.nz

69. test

From: "Ed Johnston" <kd6mve@jps.net>
Date: Sat, 4 Jul 1998 08:54:05 -0700
To: <aprssig@tapr.org>
Message-ID: <199807041552.IAA24181@repop1.jps.net>
Rendered body type: text/plain

test.....sorry for the bandwidth.

70. Re: [APRSSIG:25911] Weather stations and APRS Plus

From: wo4u@juno.com
Date: Sat, 4 Jul 1998 20:55:37 -0400
To: jeffb@espi.com, aprssig@tapr.org
Message-ID: <19980704.205557.12070.4.wo4u@juno.com>
Rendered body type: text/plain

APRSPLUS would be the absolute perfect system if you could use a WX
station with it and if it was able to display Symbols on the maps.

I think the WX station interface is somewhere on Brent's list of things
to do but I don't believe it is available yet.

Paul - WO4U

_____
You don't need to buy Internet access to use free Internet e-mail.
Get completely free e-mail from Juno at http://www.juno.com
Or call Juno at (800) 654-JUNO [654-5866]

71. Uninstalling LINUX from a Win95 machine?

From: Arte Booten <n2zrc@webspan.net>
Date: Sat, 04 Jul 1998 21:00:34 -0400
To: aprssig@tapr.org
Message-ID: <359ED031.3078CBE9@webspan.net>
Rendered body type: text/plain

Hi all,

     Since installing RedHat 5.0 (on a drive with several DOS parti-
tions), I have been unable to configure Windows-X. I've tried ConfigX,
ConfigX.curses and the Metro-X server RH5 comes with.

The way I figure, maybe I'd be better off uninstalling, then RE-
installing it, configuring the X-server (with a little help from my
friends!) on the new install. How do I go about trashing the LINUX
partitions and starting over, while leaving the existing DOS partitions
unscathed? Oh, I DO use this machine for APRSDos mapmaking! 73
--
Arte Booten <n2zrc@webspan.net> EC/RO for Bronx County, NYC ARES/RACES
PGP Key Fingerprint: 22E5 3EC7 4E3C 2460 C570 BACA E48B 71D5 0F33 54AD
Riverdale, NY [FN30bu]   Cruise Missile Coordinates: 4052.71N/07354.06W
    TM-V7a/KPC-3 6.0/GPS-III Packet: N2ZRC@KB2VLX.#BRONX.NY.USA.NA

   "There is an undetonated Chroniton Torpedo lodged in the hull."
   "Do not attempt to disarm it until I arrive." "Arrive quickly!"
      -Seven of Nine & Tuvok, Star Trek: Voyager; "Year of Hell"

72. New APRS frequency map

From: Jeff Brenton <jeffb@espi.com>
Date: Sat, 04 Jul 1998 21:12:46 -0500
To: DigiOwners <digiowners@lounet.com>
Cc: aprssig <aprssig@tapr.org>
Message-ID: <359EE11E.1FE@espi.com>
Rendered body type: text/plain

Much to my surprise, there was a reason to build a new APRS frequency
map today! Minnesota is now on 144.39 as of this weekend. So, it's now
done and posted.

http://www.dididahdahdidit.com/APRSFreq.htm for the graphic version,
http://www.dididahdahdidit.com/APRSFrqt.htm for the text-only version.

The following states have NOT reported on their APRS activity:

North Dakota
South Dakota
Nebraska (except on IA border)
Kansas (except for MO border and Topeka)
Wyoming
Maine

I have unconfirmed and conflicting rumors on:

Nevada
Arizona
Utah
Virginia (except along MD and DC borders)
Mississippi (except along Gulf of Mexico)
--

Jeff Brenton, Ham Radio call KA9VNV
Questionable web page: http://www.dididahdahdidit.com

73. Yaesu 8 pin mic plug

From: Wes Johnston <kd4rdb@eagnet.com>
Date: Sat, 04 Jul 1998 23:21:43 -0400
To: aprssig@tapr.org
Message-ID: <3.0.32.19980704232141.00743184@gena>
Rendered body type: text/plain

Anyone got the pin out for FT-2200? I got it running ok, just need to know
the 8v supply for the mic - to run the TNC.

Wes
Email: mailto:kd4rdb@usa.net
APRS: http://www.qsl.net/kd4rdb/aprs.htm
A good traveler has no fixed plans and is not intent on arriving.

74. PicoPacket RFI??

From: "Jerry Rector" <jerryr@gate.net>
Date: Sat, 4 Jul 1998 23:59:45 -0400
To: <aprssig@tapr.org>
Message-ID: <199807050359.XAA187512@chickasaw.gate.net>
Rendered body type: text/plain

Is anyone experiencing RFI emanating from the PicoPacket (Two-port model)
each time
the DCD LED lights. It totally messes up decoding of all but the strongest
packets.
My MFJ1270b does not cause this problem.
I have installed ferrite toroids on the +12V power to the PicoPacket and the

Icom 25.
Seems to me I recall reading of a similar problem here on the sig earlier
this year.
Any help/ideas.
Jerry, KB4OAM
mailto:jerryr@gate.net
http://members.tripod.com/kb4oam


```
begin 666 ATT00002.htm
M/"%$3T-465!%($A434P@4%5"3$E#("(M+R]7,T,O+T141"!7,R!(5$U,+R]%
M3B(^#0H\2%1-3#X-"CQ(14%$/@T*/$U%5$$@2%144"U%455)5CTB0V]N=&5N
M="U4>7!E(B!#3TY414Y4/2)T97AT+VAT;6P[(&-H87)S970]:7-O+3@X-3DM
M,2(^#0H-"@T*#0H\345402!C;VYT96YT/2<B35-(5$U,(#4N,# N,#4Q."XW
M(B<@;F%M93U'14Y%4D%43U(^#0H\+TA%040^#0H\0D]$62!B9T-O;&]R/2-F
M9F9F9F8^#0H\1$E6/CQ34$%.(&-L87-S/3<U,C,U-3(P,RTP-3 W,3DY.#X\
M1D].5"!C;VQO<CTC,# P,# P(&9A8V4]07)I86P@<VEZ93TR/DES( T*86YY
M;VYE(&5X<&5R:65N8VEN9R!21DD@96UA;F%T:6YG(&9R;VT@=&AE(%!I8V]0
M86-K970@*%1W;RUP;W)T(&UO9&5L*2!E86-H( T*=&EM93PO1D].5#X\+U-0
M04X^/"]$258^#0H-"CQ$258^/%-004X@8VQA<W,]-S4R,S4U,C S+3 U,#<Q
M.3DX/CQ&3TY4(&-O;&]R/2,P,# P,# @9F%C93U!<FEA;"!S:7IE/3(^=&AE
M( T*1$-$($Q%1"!L:6=H=',N)FYB<W [($ET('1O=&%L;'D@;65S<V5S('5P
M(&1E8V]D:6YG(&]F(&%L;"!B=70@=&AE('-T<F]N9V5S=" -"G!A8VME=',N
M/"]&3TY4/CPO4U!!3CX\+T1)5CX-"@T*/$1)5CX\4U!!3B!C;&%S<STW-3(S
M-34R,#,M,#4P-S$Y.3@^/$9/3E0@8V]L;W(](S P,# P,"!F86-E/4%R:6%L
M('-I>F4],CY->2 -"DU&2C$R-S!B(&1O97,@;F]T(&-A=7-E('1H:7,@<')O
M8FQE;2X\+T9/3E0^/"]34$%./CPO1$E6/@T*#0H\1$E6/CQ34$%.(&-L87-S
M/3<U,C,U-3(P,RTP-3 W,3DY.#X\1D].5"!C;VQO<CTC,# P,# P(&9A8V4]
M07)I86P@<VEZ93TR/DD@:&%V92 -"FEN<W1A;&QE9"!F97)R:71E('1O<F]I
M9',@;VX@=&AE("LQ,E8@<&]W97(@=&\@=&AE(%!I8V]086-K970@86YD('1H
M92!)8V]M( T*,C4N/"]&3TY4/CPO4U!!3CX\+T1)5CX-"@T*/$1)5CX\4U!!
M3B!C;&%S<STW-3(S-34R,#,M,#4P-S$Y.3@^/$9/3E0@8V]L;W(](S P,# P
M,"!F86-E/4%R:6%L('-I>F4],CY3965M<R -"G1O(&UE($D@<F5C86QL(')E
M861I;F<@;V8@82!S:6UI;&%R('!R;V)L96T@:&5R92!O;B!T:&4@<VEG(&5A
M<FQI97(@=&AI<R -"GEE87(N/"]&3TY4/CPO4U!!3CX\+T1)5CX-"@T*/$1)
M5CX\4U!!3B!C;&%S<STW-3(S-34R,#,M,#4P-S$Y.3@^/$9/3E0@8V]L;W(]
M(S P,# P,"!F86-E/4%R:6%L('-I>F4],CY!;GD@#0IH96QP+VED96%S+CPO
M1D].5#X\+U-004X^/"]$258^#0H-"CQ$258^/%-004X@8VQA<W,]-S4R,S4U
M,C S+3 U,#<Q.3DX/CQ&3TY4(&-O;&]R/2,P,# P,# @9F%C93U!<FEA;"!S
M:7IE/3(^2F5R<GDL( T*2T(T3T%-/"]&3TY4/CPO4U!!3CX\+T1)5CX-"@T*
M/$1)5CX\4U!!3B!C;&%S<STW-3(S-34R,#,M,#4P-S$Y.3@^/$9/3E0@8V]L
M;W(](S P,# P,"!F86-E/4%R:6%L('-I>F4],CX\02 -"FAR968](FUA:6QT
M;SIJ97)R>7) 9V%T92YN970B/FUA:6QT;SIJ97)R>7) 9V%T92YN970\+T$^
M/"]&3TY4/CPO4U!!3CX\+T1)5CX-"@T*/$1)5CX\4U!!3B!C;&%S<STW-3(S
M-34R,#,M,#4P-S$Y.3@^/$9/3E0@8V]L;W(](S P,# P,"!F86-E/4%R:6%L
M('-I>F4],CX\02 -"FAR968](FAT=' Z+R]M96UB97)S+G1R:7!O9"YC;VTO
M:V(T;V%M(CYH='1P.B\O;65M8F5R<RYT<FEP;V0N8V]M+VMB-&]A;3PO03X\
M+T9/3E0^/"]34$%./CPO1$E6/@T*#0H\1$E6/CQ34$%.(&-L87-S/3<U,C,U
M-3(P,RTP-3 W,3DY.#X\1D].5"!C;VQO<CTC,# P,# P(&9A8V4]07)I86P@
M#0IS:7IE/3(^/"]&3TY4/CPO4U!!3CXF;F)S<#L\+T1)5CX-"CPO0D]$63X\
(+TA434P^#0H`
`
end
```


75. Re: [APRSSIG:25918] PicoPacket RFI??

From: Jon Ogden <jono@enteract.com>

Date: Sun, 5 Jul 98 00:04:04 -0500
To: <jerryr@gate.net>, <aprssig@tapr.org>
Message-ID: <199807050456.XAA26614@tapr.org>
Rendered body type: text/plain

>Is anyone experiencing RFI emanating from the PicoPacket (Two-port model)
>each time
>the DCD LED lights. It totally messes up decoding of all but the strongest
>packets.
>My MFJ1270b does not cause this problem.
>I have installed ferrite toroids on the +12V power to the PicoPacket and the
>Icom 25.
>Seems to me I recall reading of a similar problem here on the sig earlier
>this year.

Jerry,

Never had this problem. The only problem I have had is hash on my FM
stereo and on my 6 meter rig. I figure I just can put up with it. Never
seen your problem.

73,

Jon
KE9NA

Jon Ogden
KE9NA

http://www.qsl.net/ke9na

"A life lived in fear is a life half lived."

76. Re: [APRSSIG:25908] APRS Weather Reporting

From: Steve Dimse K4HG <k4hg@tapr.org>
Date: Sun, 5 Jul 1998 01:33:49 -0400
To: <weather@xnet.com>, "aprssig" <aprssig@tapr.org>
Message-ID: <199807050533.AAA02425@tapr.org>
Rendered body type: text/plain

On 7/3/98 10:38 PM Ron Malinowski (weather@xnet.com) wrote:

>Dear People of APRS,
>I have always had a delema of the Peet Bros weather station, being used a
>remote
>weather station interfaced with a KPC. for 2 reasons: one you dont get the
>peak wind gust unless you transmit in converse mode very 5 minutes, and you
>dont get the rainfall for the last hour.

As if I didn't have enough on my plate, I have taken up microcontroller programming. My first project addresses exactly these concerns, and one more. With the Peet Bros Weather Picture I have to leave my weather station in complete record mode, with more than 400 characters of data it connot be used as a stand-alone weather station.

I have written code and built an interface that goes between the Peet Brothers station (in complete record mode) and the TNC. It reads the incoming records and parses out the significant fields. Using the clock and calendar data sent as part of the Peet Bros data, it builds an APRS weather packet, and sends it out the TNC. The rate is selected by a DIP switch, from one minute to 59 minutes. An LED flashes as data is received. The TNC's BTEXT is used to send the position info.

Look for K4HG-13 on APRServe to see it in action. Tonight it is transmitting every minute for testing, I'll be changing that to various intervals over the next few days.

The interface can be built for a bit less than $15 in parts (16F84 PIC, xtal, 2 caps, 1 resistor, DIP switch, 7805 regulator, LED, D-SUB connector), and takes an hour to assemble. If anyone else has interest in this I'll be glad to give them more details...

Steve K4HG

77. Re: [APRSSIG:25917] Yaesu 8 pin mic plug

From: Wes Johnston <kd4rdb@eagnet.com>
Date: Sun, 05 Jul 1998 09:41:14 -0400
To: Robert Boeckman <machead@black-hole.com>, aprssig@tapr.org
Message-ID: <3.0.32.19980705094112.00e3eec4@gena>
Rendered body type: text/plain

THanks for the address, but I had already looked there, and it does not show the 8V power for the mic. I suppose I'll have to resort to disassembly of the microphone.

At 12:23 AM 7/5/98 -0500, you wrote:
>>Anyone got the pin out for FT-2200? I got it running ok, just need to know
>>the 8v supply for the mic - to run the TNC.
>>
>>Wes
>>Email: mailto:kd4rdb@usa.net
>>APRS: http://www.qsl.net/kd4rdb/aprs.htm
>>A good traveler has no fixed plans and is not intent on arriving.
>
>Try this
>http://prairie.lakes.com/~medcalf/ztx/wire/index.html

>
>
>
>http://www.black-hole.com/users/tardis/
>
>
>
>
Wes
Email: mailto:kd4rdb@usa.net
APRS: http://www.qsl.net/kd4rdb/aprs.htm
A good traveler has no fixed plans and is not intent on arriving.

78. WWIN????

From: Jim Duncan <ku0g@kcaprs.org>
Date: Sun, 05 Jul 1998 09:12:16 -0500
To: "aprssig@tapr.org" <aprssig@tapr.org>
Message-ID: <359F89C0.88A98D9@kcaprs.org>
Rendered body type: text/plain

Who's doing the WWIN in Florida? Is there any way to filter it from
going through the I-Gate?

The EMWIN retransmission is a good thing in moderation but seeing
general forecast bulletins constantly streaming from there is getting a
little disconcerting up this way....I can see severe weather bulletins,
hurricane warnings/watches, but I think that just general weather
bulletins is going a little bit overboard...

25 lines of bulletins every 5 minutes? I know what that would do to our
network up here...

I've seen the Procomm script that's being used to do this and we've even
considered doing it up here but strictly limiting it to severe weather.

Please.....Steve, or whoever, can we do something about this? I'm
getting very tired of hearing the "new bulletin" sound file going
constantly here...

--
73 de Jim, KU0G
Chairman/Coordinator
Kansas City APRS Working Group, W0APR
Rogue Squadron Storm Chasers
Mailto:ku0g@kcaprs.org
Webpage: http://www.kcaprs.org
BorgNet: 1st of 10

79. Re: [APRSSIG:25914] Re: Weather stations and APRS Plus

From: "B. Hildebrand" <bhildebrand@worldnet.att.net>
Date: Sun, 5 Jul 1998 07:22:32 -0700
To: <wo4u@juno.com>, <aprssig@tapr.org>
Message-ID: <003201bda820$5b002d40$2725400c@dell>
Rendered body type: text/plain

WX has not been high on my priority list. However, I do now have access to
a Peet U2000, and looked at the interface last Friday. While still
preliminary, APRS+SA has now been able to access the Peet. The same
interface that I'm working on, should work with Peet, Davis, Maximum, and
Radio Shack weather stations. So while I'm not making promises, I am making
progress. <grin>   More when the first "alpha" of the WX is available.
BH, KH2Z

-----Original Message-----
From: wo4u@juno.com <wo4u@juno.com>
To: aprssig@tapr.org <aprssig@tapr.org>
Date: Saturday, July 04, 1998 6:08 PM
Subject: [APRSSIG:25914] Re: Weather stations and APRS Plus

>APRSPLUS would be the absolute perfect system if you could use a WX
>station with it and if it was able to display Symbols on the maps.
>
>I think the WX station interface is somewhere on Brent's list of things
>to do but I don't believe it is available yet.
>
>Paul - WO4U
>

>_____
>You don't need to buy Internet access to use free Internet e-mail.
>Get completely free e-mail from Juno at http://www.juno.com
>Or call Juno at (800) 654-JUNO [654-5866]
>
>

80. Re: [APRSSIG:25922] WWIN????

From: Steve Dimse K4HG <k4hg@tapr.org>
Date: Sun, 5 Jul 1998 10:26:55 -0400
To: <ku0g@kcaprs.org>, "aprssig" <aprssig@tapr.org>
Message-ID: <199807051426.JAA04163@tapr.org>
Rendered body type: text/plain

On 7/5/98 10:14 AM Jim Duncan (ku0g@kcaprs.org) wrote:

>Who's doing the WWIN in Florida? Is there any way to filter it from
>going through the I-Gate?
>
>The EMWIN retransmission is a good thing in moderation but seeing
>general forecast bulletins constantly streaming from there is getting a
>little disconcerting up this way....I can see severe weather bulletins,
>hurricane warnings/watches, but I think that just general weather
>bulletins is going a little bit overboard...
>
>25 lines of bulletins every 5 minutes? I know what that would do to our
>network up here...
>
>I've seen the Procomm script that's being used to do this and we've even
>considered doing it up here but strictly limiting it to severe weather.
>
>Please.....Steve, or whoever, can we do something about this? I'm
>getting very tired of hearing the "new bulletin" sound file going
>constantly here...

I'm not running it, but I am very concerned that it is going out the
IGate...no bulletins should be transmitted through the IGATE!. Which
program do you have set up as an IGate?

Steve K4HG

81. RE: [APRSSIG:25924] Re: WWIN????

From: "Demos Doulou" <ddoulou@gte.net>
Date: Sun, 5 Jul 1998 10:48:47 -0400
To: <k4hg@tapr.org>, <aprssig@tapr.org>
Message-ID: <000801bda824$03ddd2c0$d71efed0@wingate>
Rendered body type: text/plain

Its is cominging from us here in Pinellas. The bulletins are not being sent
to the internet. Its going out to the local area. Of course the igate sees
it so it will go into the stream. Isnt that what a igate is supposed to do?

Demos Doulou KR4US
Pinellas Cty, Florida
 ACS Radio Officer
kr4us@amsat.org
ddoulou@gte.net

> -----Original Message-----
> From: aprssig@tapr.org [mailto:aprssig@tapr.org]On Behalf Of Steve Dimse
> K4HG
> Sent: Sunday, July 05, 1998 10:36 AM
> To: aprssig@tapr.org
> Subject: [APRSSIG:25924] Re: WWIN????
>
>
> On 7/5/98 10:14 AM Jim Duncan (ku0g@kcaprs.org) wrote:
>
> >Who's doing the WWIN in Florida? Is there any way to filter it from
> >going through the I-Gate?
> >
> >The EMWIN retransmission is a good thing in moderation but seeing
> >general forecast bulletins constantly streaming from there is getting a
> >little disconcerting up this way....I can see severe weather bulletins,
> >hurricane warnings/watches, but I think that just general weather
> >bulletins is going a little bit overboard...
> >
> >25 lines of bulletins every 5 minutes? I know what that would do to our

> >network up here...
> >
> >I've seen the Procomm script that's being used to do this and we've even
> >considered doing it up here but strictly limiting it to severe weather.
> >
> >Please.....Steve, or whoever, can we do something about this? I'm
> >getting very tired of hearing the "new bulletin" sound file going
> >constantly here...
>
> I'm not running it, but I am very concerned that it is going out the
> IGate...no bulletins should be transmitted through the IGATE!. Which
> program do you have set up as an IGate?
>
> Steve K4HG
>

82. RE: [APRSSIG:25922] WWIN????

From: "Demos Doulou" <ddoulou@gte.net>
Date: Sun, 5 Jul 1998 10:50:18 -0400
To: <ku0g@kcaprs.org>, <aprssig@tapr.org>
Message-ID: <000901bda824$3a5ffc60$d71efed0@wingate>
Rendered body type: text/plain

Ok, lets over exaggerate a little. It is no way every five minutes. With
our 6 to 8 weather stations set at 2 minutes TX rates and the wwin info,and
a dozen other stations online doing keyboarding, our local network is no
where near straining. Ill let Kevin respond to what his program is putting
out in bulletin format. Unless the info that is going out on the inet is
causing programs to crash, (like some packets do with winaprs), then I hope
we do not start censoring the inet feed. Maybe there can be a filter
designed in to the program that would filter out all data from areas you do
not want to see. But lets not start censoring our best asset
73

Demos Doulou KR4US
Pinellas Cty, Florida
 ACS Radio Officer
kr4us@amsat.org
ddoulou@gte.net

> -----Original Message-----
> From: aprssig@tapr.org [mailto:aprssig@tapr.org]On Behalf Of Jim Duncan
> 25 lines of bulletins every 5 minutes? I know what that would do to our
> network up here...

> Please.....Steve, or whoever, can we do something about this? I'm
> getting very tired of hearing the "new bulletin" sound file going
> constantly here...
>

83. RE: [APRSSIG:25922] WWIN????

From: "Demos Doulou" <ddoulou@gte.net>
Date: Sun, 5 Jul 1998 10:52:56 -0400
To: <ku0g@kcaprs.org>, <aprssig@tapr.org>
Message-ID: <000a01bda824$9866b9c0$d71efed0@wingate>
Rendered body type: text/plain

As I responed to that last message. I did notice that the wwin station is
putting out info in bulletin format that it shouldnt be. Ill talk to Kevin
about that.

Demos Doulou KR4US
Pinellas Cty, Florida
 ACS Radio Officer
kr4us@amsat.org
ddoulou@gte.net

> -----Original Message-----
> From: aprssig@tapr.org [mailto:aprssig@tapr.org]On Behalf Of Jim Duncan
> Sent: Sunday, July 05, 1998 10:17 AM
> To: aprssig@tapr.org
> Subject: [APRSSIG:25922] WWIN????
>
>
> Who's doing the WWIN in Florida? Is there any way to filter it from
> going through the I-Gate?

>

84. APRS Fire Spotter Tracking

From: "Ronald G. Parsons" <w5rkn@amsat.org>
Date: Sun, 05 Jul 1998 11:31:07 -0500
To: APRS-SIG <aprssig@tapr.org>
Message-ID: <359FAA4B.F42C10B@amsat.org>
Rendered body type: text/plain

On 6-27-98 and 6-28-98, we flew an APRS tracker on a CAP plane on fire patrol
over Central Texas. The extreme fire danger in Texas prompted the Texas Forest
Service to request a test of a ham radio tracker to display the spotter plane
positions as well as marking fires on a map that could be projected at the
control office at the Austin (Texas) Emergency Operations Center (EOC).

I built a tracker out of parts-on-hand. It consisted of an Alinco DJ-190 5W
talkie, a Synergy XTS/II (Motorola ONCORE GT+) GPS receiver and a Mic-Encoder.
The tracker was built into an old steel hard disk drive case (about 2x10x10).
The 2m antenna was an 8" duck hung from the inside top of the cabin just aft
of the rear seat. The GPS antenna was suction-cupped to the rear window.
The battery was a 4.5 Amp-Hr gel cell.

The flight plan extended about 200 km west of Austin. We chose to use a voice
repeater in Henly (about 50 km west of Austin) to repeat the posits. The EOC
monitored the output of the Henly repeater. The Mic-E was initialized in
MIM mode to provide "readable" packets. The posit interval was one minute
with telemetry (battery voltage and temp) every five minutes. The tracker was
on for 6-1/2 hours without telemetry showing any voltage drop.

The track of the plane was displayed on a large projection screen at the
Austin EOC interspersed with still-frame video from the CAP plane when the
place was close in. Except for two outlying counties, we got good reception
of the posits. The altitude of the plane is unknown.

Two JPEG screen prints of the Precision Mapping Window showing the posits
received are uploaded to the TAPR ftp site (FireTrak.zip and FireTrak.txt).
I have asked for them to be placed at
ftp://ftp.tapr.org/tapr/SIG/aprssig/files/presentations/

--
Ron Parsons
W5RKN

85. Re: [APRSSIG:25926] RE: WWIN????

From: Steve Dimse K4HG <k4hg@tapr.org>
Date: Sun, 5 Jul 1998 12:59:29 -0400
To: <ddoulou@gte.net>, "aprssig" <aprssig@tapr.org>
Message-ID: <199807051659.LAA15776@tapr.org>
Rendered body type: text/plain

On 7/5/98 10:59 AM Demos Doulou (ddoulou@gte.net) wrote:

>Ok, lets over exaggerate a little. It is no way every five minutes. With
>our 6 to 8 weather stations set at 2 minutes TX rates and the wwin info,and
>a dozen other stations online doing keyboarding, our local network is no
>where near straining. Ill let Kevin respond to what his program is putting
>out in bulletin format. Unless the info that is going out on the inet is
>causing programs to crash, (like some packets do with winaprs), then I hope
>we do not start censoring the inet feed. Maybe there can be a filter
>designed in to the program that would filter out all data from areas you do
>not want to see. But lets not start censoring our best asset

Perhaps I misread Jim's post. I thought he was saying that the bulletins

were being IGATE'ed onto his RF LAN. This should not, and must not,
happen. However, if I did misread Jim post and he is complaining about
data on the internet, then I can give a very definite answer...

I maintain the right to censor anything that is being sent direct to the
internet server. For example, someone wanted to write a program to send
all NWS weather reports to the server...I forget the number but hundreds
every hour. I vetoed this idea. Another ham wants to directly send
propagation information to the server, a few times a day. This I feel is
good...the decision is on a case by case basis.

However, anything that a local ham feels is appropriate for his rf
network is welcome on APRServe, and will not be censored. In this case,
the WWIN data is sent on RF and then picked up by an IGATE. This is
acceptable, and it will not be removed from the internet stream.

On the separate issue of what gets sent on RF...

If I were a local user I would probably object to the volume of
information being sent out. There are routine weather forcasts and a
large number of blank lines being sent. I think any emergent weather that
threatens a local area ought to be transmitted, but routine items, like
forcasts and tropical weather summaries, ought not to clutter a LAN.
However, this is an issue for each local area to settle based on their
own needs.

The problems of large numbers of bulletins is not limited to WWIN. Most
of the bulletins are not of interest to me. You could turn off the
bulletin sound, but then you might miss a local bulletin. I solve this
with separate RF and internet computers, but if you only have one machine
for APRS, there isn't a good answer. Perhaps Brent and TSB will consider
splitting the RF and internet traffic...

Steve K4HG

86. RE: [APRSSIG:25926] RE: WWIN????

From: "Demos Doulou" <ddoulou@gte.net>
Date: Sun, 5 Jul 1998 13:13:57 -0400
To: "Steve Dimse K4HG" <k4hg@tapr.org>, "aprssig" <aprssig@tapr.org>
Message-ID: <000b01bda838$4b72eda0$d71efed0@wingate>
Rendered body type: text/plain

Ok, I talked to Kevin and what is happening is that the folks who control
the emwin data stream are adding and changing names of the files sent on a
daily basses. This screws with the parser used for transmitting on APRS.
When wwin is parsing correctly, only sever wx info is parsed into bulletin
format, and select non sever info is sent as non APRS plain text. Hopefully
the name changing game will stop soon and all will be well.

As far as loading on the channel, in our area it has never been a problem,
even with keyboarding, mobile trackers and wx info going on at the same
time.

73

Demos Doulou KR4US
Pinellas Cty, Florida
 ACS Radio Officer
kr4us@amsat.org
ddoulou@gte.net

> -----Original Message-----
> If I were a local user I would probably object to the volume of
> information being sent out. There are routine weather forcasts and a
> large number of blank lines being sent. I think any emergent weather that
> threatens a local area ought to be transmitted, but routine items, like
> forcasts and tropical weather summaries, ought not to clutter a LAN.
> However, this is an issue for each local area to settle based on their
> own needs.

87. Re: [APRSSIG:25929] RE: WWIN????

From: Cap Pennell <cap@cruzio.com>
Date: Sun, 05 Jul 1998 10:56:39 -0700
To: k4hg@tapr.org, aprssig@tapr.org
Message-ID: <3.0.5.32.19980705105639.00866760@mail.cruzio.com>
Rendered body type: text/plain

Within APRS+SA, it's easy to add WWIN (or any station) to the "Ignore All Packets" list.
73, Cap KE6AFE

At 12:01 PM 7/5/98 -0500, Steve Dimse K4HG wrote:
<snip>
>The problems of large numbers of bulletins is not limited to WWIN. Most
>of the bulletins are not of interest to me. You could turn off the
>bulletin sound, but then you might miss a local bulletin. I solve this
>with separate RF and internet computers, but if you only have one machine
>for APRS, there isn't a good answer. Perhaps Brent and TSB will consider
>splitting the RF and internet traffic...
>
>Steve K4HG
--
Cap Pennell
Santa Cruz, CA 95062-1002   3658.93N/12200.91W [CM86xx]
email: cap@cruzio.com   home page: http://members.cruzio.com/~cap
packet radio: KE6AFE @ki6eh.#wcca.ca.usa.noam

88. Re: [APRSSIG:25929] RE: WWIN????

From: "B. Hildebrand" <bhildebrand@worldnet.att.net>
Date: Sun, 5 Jul 1998 11:38:12 -0700
To: <k4hg@tapr.org>, <aprssig@tapr.org>
Message-ID: <00b501bda844$123d6d60$2725400c@dell>
Rendered body type: text/plain

APRS+SA has an IGNORE feature. I put WWIN into the Ignore list, and it
never gets past the callsign portion of the parser. (I can do the same for
APRSERVE <grin>)
..
As far as computers, multiple copies of APRS+SA can be run simultaneously.
One can be dedicated to RF and one to Internet if one really wanted to
separate the data streams, and both can still use the same maps.

>The problems of large numbers of bulletins is not limited to WWIN. Most
>of the bulletins are not of interest to me. You could turn off the
>bulletin sound, but then you might miss a local bulletin. I solve this
>with separate RF and internet computers, but if you only have one machine
>for APRS, there isn't a good answer. Perhaps Brent and TSB will consider
>splitting the RF and internet traffic...
>
>Steve K4HG
>

89. CONCERNS

From: kd4emi@juno.com (Michael A Kantor)
Date: Sun, 5 Jul 1998 14:36:20 -0400
To: APRSSIG@tapr.org
Message-ID: <19980705.143622.3886.0.kd4emi@juno.com>
Rendered body type: text/plain

This afternoon I was looking at msgs on APRS. I came across (no name
mentioned), a bltn asking if anyone had info about a certain person at a
red cross shelter.

The msg was posted in a county well north of me, but do to propagation
etc, made it here, and it also undoubtedly made it on the internet as
well.

Here is the concern:

I have seen it posted in QST and other pubs that the red cross has a very
specific policy about "victims" or shelter dwellers names being broadcast
over the radio, both Ham and their "own" red cross freqs. The policy as I
last heard it was that they do not allow any names over RF. While this
may seem silly, after all, how do you locate someone without giving their
name , it is an established policy. Is anyone familiar with this ?

Mike KD4EMI@JUNO.COM

_____
You don't need to buy Internet access to use free Internet e-mail.
Get completely free e-mail from Juno at http://www.juno.com
Or call Juno at (800) 654-JUNO [654-5866]

90. Re: [APRSSIG:25922] WWIN????

From: rwf <rwf@BSRG.org>
Date: Sun, 05 Jul 1998 15:35:25 -0400

To: aprssig@tapr.org
Message-ID: <Version.32.19980705124135.010a86b0@ccegate.cokecce.com>
Rendered body type: text/plain

I have them in the "Ignore List" on APRS+
I used WWIN. And boy can I tell when I set up a new version of APRS+ and forget to do this.

It would be nice if the I-gate would filter it, though, because I am not sure all APRS versions have an ignore list. The TNC ignore list would of course be unusable for an Igate source ;-)

This is one reason I'm glad they are on 144.39 and we are on 145.79. With the openings we have been having, we'd see them up here in GA/TN, even thought Kevin/Demos, et al are taking care to limit the local digi path.

Ralph

At 09:14 AM 7/5/98 -0500, you wrote:
>Who's doing the WWIN in Florida? Is there any way to filter it from
>going through the I-Gate?

91. Re: [APRSSIG:25917] Yaesu 8 pin mic plug

From: Tom VanAlstyne <tomvan@sprynet.com>
Date: Sun, 05 Jul 1998 17:08:12 -0400
To: kd4rdb@eagnet.com
Cc: aprssig@tapr.org
Message-ID: <359FEB37.4388CB8A@sprynet.com>
Rendered body type: text/plain

Wes,

    The mike pin-out for the FT-2200 is as follows. Copied from the manual.

1. UP
2. + 5V
3. DWN
4. SP
5. ACC
6. PTT
7. GND
8. MIC

    I have a FT-2200 Manual and diagrams. If you need anything else let me know.

        Tom   W1SYD

92. RF vs TCP/IP

From: "Paul Knupke, Jr." <pk@ij.net>
Date: Sun, 5 Jul 1998 17:36:32 -0400
To: "Aprssig@Tapr. Org" <aprssig@tapr.org>
Message-ID: <000601bda85c$fa6320e0$3d2b04d1@paul>
Rendered body type: text/plain

There has been an interesting discussion started about the traffic being I-GATED recently.

There has been concern about the amount of traffic being sent into the aprs.net from WWIN.

I personally like to see all the activity, bulletins, information that can be put into into the internet stream. Its interesting to watch! I also seperate my RF from my TCP/IP APRS activity by running seperate copies of WINAPRS so I do not mix the local network with the worldwide one. I run APRS using the internet as my sole connection at work. I am not in the position to install a RF packet station at this time.

It is easy enough to run two copies of WINAPRS.

Little of the information that is coming by way of the internet is being transmitted back out onto RF except short messages.

Only those running an IGATE might have trouble with the traffic because it will certainly fill up their screen but IGATE stations are the far minority of users. Using an ignore feature such as APRS+ has would allow IGATES to ignore the traffic easily enough on the local/console station so the new

bulletin message plays.

I'd like to see more areas make use of scripting to parse information into the internet stream. Its very useful information especially for those who do use APRS in an internet only application at times. I know the WWIN bulletins that are being sent out can use some tweaking but this is amateur radio isn't it? We're supposed to experiment, and try new things. With the automated posting of warning and watches county "coloring" I think its really a supurb system.

I am sure during band openings others will see the traffic but I don't think the traffic is so great it would saturate the network. We have a medium size and growing network in central Florida that does not have the benefit of digis on mountains that will allow a single WIDE,WIDE go five states. We have quite a few automated weather stations, and several trackers in addition to the rest of the users and the traffic isn't that bad. So if the band opens you get more traffic and you can budlist stations if the needs call for it.

73,
Paul

Paul E. Knupke, Jr. Amateur Radio: KR4YL
pk@ij.net Largo, FL

93. Re: [APRSSIG:25933] CONCERNS

From: n8exf@juno.com (R L BOEHM)
Date: Sun, 5 Jul 1998 17:41:00 -0400
To: kd4emi@juno.com
Cc: aprssig@tapr.org
Message-ID: <19980705.174102.4438.0.N8EXF@juno.com>
Rendered body type: text/plain

On Sun, 5 Jul 1998 13:46:53 -0500 (CDT) kd4emi@juno.com (Michael A Kantor) writes:
>This afternoon I was looking at msgs on APRS. I came across (no name >mentioned), a bltn asking if anyone had info about a certain person at a >red cross shelter.
snip
>Here is the concern:
>
>I have seen it posted in QST and other pubs that the red cross has a >very
>specific policy about "victims" or shelter dwellers names being >broadcast over the radio, both Ham and their "own" red cross freqs. The >policy as I last heard it was that they do not allow any names over RF. >While this may seem silly, after all, how do you locate someone without >giving their name, it is an established policy. Is anyone familiar with this ?
>
>Mike KD4EMI@JUNO.COM

Mike,
I have never seen anything in print (I even looked in my 3000 series docs, I have not taken the "shelter" classes) but as a 20 year volunteer and DSHR volunteer, I have always been told that the ARC does not want names broadcast in clear voice and they even will wince at "data modes". The "accepted mode" is to contact the LOCAL ARC chapter and they will enquire via their network - for some reason, I cannot remember the name of it right now - they have an entire sub group dedicated to H&W/Disaster inquiry.
The ARC is paranoid to a fault when it comes to personal data over voice... but I guess they have their reasons.

73 de Bob, N8EXF // KN
homepage http://www.qsl.net/n8exf

Don't sweat the petty things, and don't pet the sweaty things

94. Re: [APRSSIG:25933] CONCERNS

From: "Jacques Voisin" <jvoisin@evcom.net>
Date: Sun, 5 Jul 1998 17:57:31 -0400
To: <aprssig@tapr.org>
Message-ID: <000801bda85f$e9c1e5c0$aad98fd0@k6-300>
Rendered body type: text/plain

The problem with the Red Cross is that they cannot locate a certain victim during the brunt of an operation as rthe one this week where people are

dispersed all over Florida. If an individual in a shelter wants to go thru
another group than the Red Cross then he relinquish his privacy and cannot
hold the ARC responsible for his name being on the air. Matter of fact we
had several request to locate family members thru the LMARS traffic net. The
Red Cross will try to locate family members when going into the recovery
period. The Red Cross will not publish the name of evacuees in any shape or
form but will search their record and give the information to the person who
requested it. But one more time nobody will stop the people in shelters to
seek the help of other organisations.
Hope this help for a future situation.
73 to all.

Jacques C. Voisin, KD4TWB, AAR4JI
ARC Central Florida Chapter Communication Chairman
http://evcom.net/~jvoisin/kd4twb.htm
E-Mail: jvoisin@evcom.net
-----Original Message-----
From: Michael A Kantor <kd4emi@juno.com>
To: aprssig@tapr.org <aprssig@tapr.org>
Date: Sunday, July 05, 1998 15:05
Subject: [APRSSIG:25933] CONCERNS

>This afternoon I was looking at msgs on APRS. I came across (no name
>mentioned), a bltn asking if anyone had info about a certain person at a
>red cross shelter.
>
>The msg was posted in a county well north of me, but do to propagation
>etc, made it here, and it also undoubtedly made it on the internet as
>well.
>
>Here is the concern:
>
>I have seen it posted in QST and other pubs that the red cross has a very
>specific policy about "victims" or shelter dwellers names being broadcast
>over the radio, both Ham and their "own" red cross freqs. The policy as I
>last heard it was that they do not allow any names over RF. While this
>may seem silly, after all, how do you locate someone without giving their
>name , it is an established policy. Is anyone familiar with this ?
>
>Mike KD4EMI@JUNO.COM
>
>____
>You don't need to buy Internet access to use free Internet e-mail.
>Get completely free e-mail from Juno at http://www.juno.com
>Or call Juno at (800) 654-JUNO [654-5866]
>

95. RE: [APRSSIG:25918] PicoPacket RFI??

From: "Jerry Rector" <jerryr@gate.net>
Date: Sun, 5 Jul 1998 18:09:05 -0400
To: <jeffb@espi.com>, <aprssig@tapr.org>
Message-ID: <199807052210.SAA09574@onondaga.gate.net>
Rendered body type: text/plain

You're correct..unplugging the Garmin GPS II+ data cable
from the serial 2 port clears the problem...maybe I'll
try some mini ferrite beads on the TXD and RXD leads tonite.
Thanks for the hint!
Jerry, KB4OAM

-----Original Message-----
From: Jeff Brenton [mailto:jeffb@espi.com]
Sent: Sunday, July 05, 1998 02:53 AM
To: jerryr@gate.net
Subject: Re: [APRSSIG:25918] PicoPacket RFI??

Do you still hear the RFI with the GPS unplugged? I've found that the
dual-port Pico has a LOT of RFI that disappears as soon as the GPS is
unplugged.
--

Jeff Brenton, Ham Radio call KA9VNV
Questionable web page: http://www.dididahdahdidit.com
Selling some toys: http://www.espi.com/ForSale.html

96. Re: [APRSSIG:25936] RF vs TCP/IP

From: Steve Dimse K4HG <k4hg@tapr.org>
Date: Sun, 5 Jul 1998 18:22:00 -0400
To: <pk@ij.net>, "aprssig" <aprssig@tapr.org>
Message-ID: <199807052222.RAA04065@tapr.org>
Rendered body type: text/plain

On 7/5/98 5:40 PM Paul Knupke, Jr. (pk@ij.net) wrote:

>I'd like to see more areas make use of scripting to parse information into
>the internet stream. Its very useful information especially for those who
>do use APRS in an internet only application at times.

Again, I do reserve the right to decide what is allowed to be sent
directly to APRServe. If anyone wants to do something like this, please
discuss it with me. I need to give you the logon string in any case
before the server will accept data.

Steve K4HG

97. RE: [APRSSIG:25934] Re: WWIN????

From: "Demos Doulou" <ddoulou@gte.net>
Date: Sun, 5 Jul 1998 18:39:06 -0400
To: <rwf@BSRG.org>, <aprssig@tapr.org>
Message-ID: <000e01bda865$b7f82c60$d71efed0@wingate>
Rendered body type: text/plain

> -----Original Message-----
> From: aprssig@tapr.org [mailto:aprssig@tapr.org]On Behalf Of rwf
> It would be nice if the I-gate would filter it, though, because I am not
> sure all APRS versions have an ignore list. The TNC ignore list would of
> course be unusable for an Igate source ;-)

Since the IGATE is also my main APRS station, I cannot budlist out the wwin
since I use it as a backup source of bulletins. When a stand alone and
stable version of a igate comes out, I will be moving the igate to our eoc
and will then most likely Budlist wwin.

73

Demos Doulou KR4US
Pinellas Cty, Florida
 ACS Radio Officer
kr4us@amsat.org
ddoulou@gte.net

98. Re: [APRSSIG:25936] RF vs TCP/IP

From: Cap Pennell <cap@cruzio.com>
Date: Sun, 05 Jul 1998 16:11:14 -0700
To: pk@ij.net, aprssig@tapr.org
Message-ID: <3.0.5.32.19980705161114.007e2840@mail.cruzio.com>
Rendered body type: text/plain

At 04:40 PM 7/5/98 -0500, Paul Knupke, Jr. KR4YL wrote:
<snip>
>So if the
>band opens you get more traffic and you can budlist stations if the needs
>call for it.

I think this is a better solution than staying on a different frequency to avoid DX during band
openings. ;-)
73, Cap KE6AFE
--
Cap Pennell
Santa Cruz, CA 95062-1002   3658.93N/12200.91W [CM86xx]
email: cap@cruzio.com   home page: http://members.cruzio.com/~cap
packet radio: KE6AFE @ki6eh.#wcca.ca.usa.noam

99. Re: CONCERNS

From: wo4u@juno.com
Date: Sun, 5 Jul 1998 20:44:22 -0400
To: n8exf@juno.com, aprssig@tapr.org
Message-ID: <19980705.205110.3630.2.wo4u@juno.com>
Rendered body type: text/plain

On Sun, 5 Jul 1998 13:46:53 -0500 (CDT) kd4emi@juno.com (Michael A
Kantor) writes:
>This afternoon I was looking at msgs on APRS. I came across (no name
>mentioned), a bltn asking if anyone had info about a certain person at a

>red cross shelter.
snip

When an individual Registers at a RC Shelter he/she is given the
opportunity to select whether or not their name is to be given out to
anyone. They sign a Registration Form that has this selection checked.
If they wish to remain anonymous ... they can. In fact, I have seen a
few cases where individuals would not even give their real name. Per RC
instructions, that is OK as well.

Our local RC Chapters believe that the use of Packet is "secure enough"
and we have used this means of communications several times to pass
information back and forth between Shelters, Hospitals and Command Posts.
 This is where Portable Digis really come in handy. We can use them on
other Packet frequencies and maintain a greater sense of security than by
using the National APRS frequency and having sensitive information being
IGated all around the World. Having the written record is a valuable
resource.

I suppose, like anything else, there is little uniformity across the
Country as to how the Local Chapters interpret the instructions -
however, I am pleased and proud that we are able to serve their needs
here with digital communications (including APRS).

Paul - WO4U

100. Re: [APRSSIG:25937] Re: CONCERNS

From: "John B. Leonard, Jr" <jleonard@tbcnet.com>
Date: Sun, 05 Jul 1998 20:18:03 -0500
To: n8exf@juno.com, aprssig@tapr.org
Message-ID: <3.0.5.32.19980705201803.0095b7c0@tbcnet.com>
Rendered body type: text/plain

FYI-
ARC 3031 "Mass Care-Preparedness and Operations", Pg. 10, "Assisting
Disaster Welfare Inquiry", para. 4:
        "The shelter manager must be aware of the importance of confidentiality in
gathering and maintaining information about shelter occupants. Such
information should be used only within the Red Cross. Specific requests
for related information from the media and other agencieds should be
referred to administrative staff."

The reason behind all of this confidentiality is that the US Congress gave
the RC a mandate way back in the early 1900's to alleviate suffering due to
disaster-related causes. By ensuring confidentiality, it sends everyone a
message that no one having reason to use RC services will have his/her
identity released to the public.

What does this have to do with ham radio/APRS? Because ham radio, by its
very nature, can be monitored, even packet. Hence the confict between
NTS/Health and Welfare messages that ham radio does so well, and the
Disaster Welfare Inquiry that is the RC way of passing disaster-related
traffic.

The bottom line is that the RC wants confidentiality maintained. Ham radio
can't guarantee that.

jbl

At 04:50 PM 7/5/98 -0500, R L BOEHM wrote:
>On Sun, 5 Jul 1998 13:46:53 -0500 (CDT) kd4emi@juno.com (Michael A
>Kantor) writes:
>>This afternoon I was looking at msgs on APRS. I came across (no name
>>mentioned), a bltn asking if anyone had info about a certain person at a
>>red cross shelter.
>snip
>>Here is the concern:
>>
>>I have seen it posted in QST and other pubs that the red cross has a
>>very
>>specific policy about "victims" or shelter dwellers names being
>>broadcast over the radio, both Ham and their "own" red cross freqs. The
>>policy as I last heard it was that they do not allow any names over RF.
>>While this may seem silly, after all, how do you locate someone without
>>giving their name, it is an established policy. Is anyone familiar with
>this ?
>>
>>Mike KD4EMI@JUNO.COM
>

>Mike,
>I have never seen anything in print (I even looked in my 3000 series
>docs, I have not taken the "shelter" classes) but as a 20 year volunteer
>and DSHR volunteer, I have always been told that the ARC does not want
>names broadcast in clear voice and they even will wince at "data modes".
>The "accepted mode" is to contact the LOCAL ARC chapter and they will
>enquire via their network - for some reason, I cannot remember the name
>of it right now - they have an entire sub group dedicated to H&W/Disaster
>inquiry.
>The ARC is paranoid to a fault when it comes to personal data over
>voice... but I guess they have their reasons.
>
>
>73 de Bob, N8EXF // KN
>homepage   http://www.qsl.net/n8exf
>
>Don't sweat the petty things, and don't pet the sweaty things
>

J Barry Leonard/W9JBL
DeKalb IL E-MAIL mailto:jleonard@tbcnet.com
WWW Home Page http://tbcnet.com/~jleonard/home.html
American Red Cross Disaster Services -Rockford IL Chapter

101. Re: CONCERNS

From: Arte Booten <n2zrc@webspan.net>
Date: Sun, 05 Jul 1998 18:28:28 -0400
To: aprssig@tapr.org
Message-ID: <359FFE0C.6618EF9E@webspan.net>
Rendered body type: text/plain

Hi all,

Mike Kantor wrote:

>I've seen it posted ... that the Red Cross has a policy about victims'
>names being broadcast over the radio, both Ham and their "own" freqs.

     This is a national policy of The Red Cross and most (if not all) Memoranda of Understanding (MOU's) between that agency and local/sectional/regional, etc. ARES groups specify this as well.

     Think about it. Your family has been evacuated to a shelter due to threatening brush fires. Some creep with a scanner hears this. He now knows that your house is empty and unguarded.

     Let's say a victim has expired. Their name is transmitted along with that information. Lawyers have scanners. So do those that prey upon grieving family members. So do those same family members!

     I think it's a good policy. 73
--
Arte Booten <n2zrc@webspan.net> EC/RO for Bronx County, NYC ARES/RACES
PGP Key Fingerprint: 22E5 3EC7 4E3C 2460 C570 BACA E48B 71D5 0F33 54AD
Riverdale, NY [FN30bu]   Cruise Missile Coordinates: 4052.71N/07354.06W
    TM-V7a/KPC-3 6.0/GPS-III Packet: N2ZRC@KB2VLX.#BRONX.NY.USA.NA

   "There is an undetonated Chroniton Torpedo lodged in the hull."
   "Do not attempt to disarm it until I arrive." "Arrive quickly!"
      -Seven of Nine & Tuvok, Star Trek: Voyager; "Year of Hell"

102. Repost: APRS Articles

From: Arte Booten <n2zrc@webspan.net>
Date: Sun, 05 Jul 1998 21:48:02 -0400
To: APRS SIG <aprssig@tapr.org>
Message-ID: <35A02CD2.D0FCFD3@webspan.net>
Rendered body type: text/plain

Hi all,

     I haven't sent these in some months, so maybe they're due. As always, all I ask if you want to republish them in your club's newsletter is that I get credit for them and, if possible, copies of the issues in which they appear. 73

==========

The Automatic Position Reporting System

An Overview and Introduction
by Arte Booten N2ZRC (packet: N2ZRC@KB2VLX.#BRONX.NY.USA.NA)
(E-mail: n2zrc@weca.org)

Many of you have heard discussions about a packet radio program called The Automatic Position Reporting System, (also called APRS.) It's a system which, unlike PBBS's, nodes and DX clusters, uses an UNCONNECTED protocol to transmit your exact position, a symbol denoting the type of station you're running and a Brief comment about it. It also uses direct keyboard-to-keyboard "chatting," has direction-finding capabilities and much more.

How does it work? In its most simplistic form you transmit a packet which contains your callsign, exact latitude and longitude, information about your station's power, antenna's height, gain and pattern as well as a brief comment of your choosing along with some symbols necessary to make the system work. With this information your station appears graphically on a map (actually, one in a series of many maps) on the monitor as would other stations that are on frequency. Since this is an UNCONNECTED protocol, on-air packets can be kept to a minimum.

Consider this: When you connect to a local station using standard AX.25 you send a connect request to that station, they acknowledge that packet, send you a connected packet which you must then acknowledge. The same thing happens to EVERY packet you, or the other station, sends. With APRS you only send ONE packet to convey your information. If it's not received on the first transmission, APRS retransmits this information using a decaying time delay (that is, the second packet is sent eight seconds after the first, the third fifteen seconds later, the fourth thirty seconds later,, the fifth a minute later etc. until, after an hour, you're only sending six packets an hour!) This makes more efficient use of the frequency.

APRS uses different kinds of digipeaters, which use generic callsigns of RELAY, WIDE, TRACE, GATE and ECHO. RELAY stations (the default setting) are base stations used to digipeat low-power portable and mobile stations. WIDE stations will digipeat packets addressed either to their specific callsign or the generic WIDE to other VHF stations and WIDEs. A packet addressed to TRACE will, with a TNC with appropriate firmware, be digipeated, and the generic callsign will be substituted with the TNC's own callsign. An ECHO performs a function similar to that of a WIDE on HF. A GATE will digipeat from VHF to HF. When setting up APRS for your location you'll set your digipeater path based on the situation at that QTH and where you want your information to go. For keyboard-to-keyboard chats (which are the only comms in which "ACK's" are used) you can also set alternate digipeater paths. Not only does this direct your message via the shortest possible route, but it also reduces QRM.

The program also interfaces with popular weather stations such as those made by Davis and Peet Brothers, thus allowing for real-time weather data which is available at the touch of a key. The potential for this during a SKYWARN situation is obvious. You'll get wind speed and direction, temperature, rainfall amounts by the hour and 24-hour period and, in some cases, barometric readings. Such weather data can also be entered manually if a station has the information but not the hardware.

There is also a Direction-Finding mode which can be used by stations with either a beam or omni antenna! When the "fox" transmits, stations can call, by voice (on another frequency!) or keyboard their beam headings and/or signal strength. Using the antenna gain figures for these stations, circles are drawn on the map. The "fox" will usually be located where these circles converge. If you have one of the many "doppler" antenna systems they can also be used.

If DX-ing is your thing, there's also a "DX-mode" which also uses the UI protocol by simply monitoring the DX cluster frequency. As new spots are posted, they appear on the map with their callsign. Their location is based on the callsign prefix of the spot. Obviously, since you're not connected to the cluster, this isn't meant as a replacement to your normal AX.25 program, and you can't SEND messages, you can receive them (the program will flag yours and display them when asked.) It's just another tool for your county- or country-hunting efforts. This feature is only available in APRS versions 7.96 or earlier.

If, like me, you have a Global Positioning System (GPS) receiver with NMEA-0183 output this, too, can be utilized with amazing results! Your mobile or portable position can be regularly updated. Using such a "stand-alone tracker" you don't even need a computer. All you'd need is an H-T, TNC and GPS! Think about the possibilities for such a setup in something like a marathon, walkathon or even for someone shadowing an important official.

APRS was written to be able to run on just about any PC compatible computer from the latest Pentium Pro down to a lowly 8086. Heck, I know several people

that use it with a Hewlett-Packard HP-200 palmtop! Maps are available from a large-scale map of the whole world to extremely detailed street-level maps. There's even a mail-reflector about it to which you can subscribe. Send a message to LISTPROC@TAPR.ORG, with a body that reads "subscribe aprssig your_name" without the quotes and substituting your name for "your_name".

APRS is lots of fun, has many potential ARES/RACES/SKYWARN uses. I'm sure you'll enjoy playing with it!

==========

SOME REALLY SIMPLE BASIC INSTRUCTIONS ON GETTING APRS ON THE AIR NOW
by Arte Booten N2ZRC (packet: N2ZRC@KB2VLX.#BRONX.NY.USA.NA)
(E-mail: N2ZRC@weca.org)

First things first. In order to run APRS, you first have to get it. If you have access to anonymous FTP simply navigate to the following URL:

ftp://ftp.tapr.org/tapr/SIG/files/dosstuff/APRSDos

and look for the latest version.

In this example I'll use the nonexistent APRS version 9.99, which would be called "APRS999.zip." Substitute the appropriate file name for this.

If you're using PkZip204g, put your APRS disk into the floppy drive of your choice (I'll call it drive A) then expand the APRS files by using the following commands on the hard drive of choice:

Make an appropriate directory	MD APRS
Change to this directory	CD \APRS
Switch to the A drive	A:
Run PKUNZIP with directories	PKUNZIP -d APRS999.zip C:

Don't forget to use that "-d" switch, which lets it create the necessary subdirectories.

If you use WinZip, PkZip250 (or some other Windows-based zip utility, change to drive A and double-click on APRS999.zip, click expand button, tell it where you want it and follow onscreen directions.

Make sure your TNC is in Terminal or Command mode (whatever it's called by the manufacturer) and that parity is set to 8-N-0. At the C:\> prompt, go to your chosen APRS folder and invoke "APRS99.exe". If you're using Windows, simply double-click on that folder. This brings you to the LOGO screen. Enter your callsign and ssid, if any. Tell it what kind of TNC you're using. Answer the other various questions. When you're done, the main map screen will appear.

Now press M(aplist) then C(onfigure) and C(hange maplist), tell it you want to use the appropriate maplist for your area, either EAS(t), CEN(tral), WES(t), NE(ast), SE(ast), etc. Use the arrows or mouse to bring the cursor to your approximate location (keep your eye on the upper left part of the screen which shows the latitude/longitude of the cursor.) Then press HOME to center your screen on it. Use the PgDN key to zoom in a few screens and tweak the cursor to your EXACT QTH. You may have to zoom in to a very small scale to get the necessary resolution. Once the cursor is at the right spot hit the HOME key again.

Press I(nput) M(y) P(osition) and confirm your lat/long, choose a symbol for yourself, type in a brief comment, and verify it. Once you've pressed that "Y" you're essentially ready to go on the air. In it's most basic form, you're configured! Tune the radio to 144.39 (in most parts of the country), hook it up and see what you can see. It might take a few minutes for other stations to appear (assuming there are some) but if you get a little impatient, try pressing O(perations) Q(uery) and give it a radius such as 64 to force position reports from others.

Look for stations whose symbol is a green star. THESE ARE THE WIDE DIGIPEATERS! Is there one fairly close to you? If there is, press the "D" key. If an asterisk (*) appears next to a callsign (hopefully that nearby WIDE) then you're hearing it directly. Make a note of that nearby WIDE station's digipeater path.

Now you're going to set YOUR digipeater path. Press O(perations) D(igipeaters). If you heard that WIDE station directly, enter it's callsign and ssid, if any. Follow this with a comma then type in "WIDE". For example: N2MH-15,WIDE would be how I'd enter it here in The Bronx, but the nearest WIDE to YOUR QTH is what YOU'RE looking for.

Next you want to set your Power-Height-Gain figures. Press I(nput) P(ower) and tell it how many watts you're using, your antenna's height above AVERAGE terrain (look at a topographical map of your area,) the gain in dBd and the antenna's directional pattern in degrees or 0 (zero)for an omnidirectional antenna.

Finally, set your Beacon Text by pressing I(nput) M(y) S(tatus) and typing in a short comment, different than the text you used for your Position Text earlier. At this point, you're about as far as you need to go for now.

I hope to see you all on my screen in the VERY near future. Look for me at cruise missile coordinates 4052.71N/07354.06W. 73

==========

APRS: Using It
(or: Now that I've got it set up, how do I make it work for me?)
by Arte Booten N2ZRC (packet: N2ZRC@KB2VLX.#BRONX.NY.USA.NA)
(E-mail: N2ZRC@weca.org)

In other articles I've described what The Automatic Position Reporting System is and how to get it set up on your computer and radio. So you're now probably telling yourself "OK, great. I've got these stations appearing on my screen. Now what do I do?"

One of the features in APRS is the ability to send what we call oneliners; that is, one-line messages from station to station either direct or by using digipeaters. From the main APRS screen press S(end), type the station's call and <cr>. Then type your message and another <cr>. You'll know when they got it when you receive an *ACK* which replaces the first five characters of your message. These one-liners are the only situation when APRS uses anything other than UI packets.

When you send a message in this manner it will be sent via the same digipeater path as your position and ID packets. If your intended recipient is someplace else you can STILL send it there by specifying an alternate digipeater path, which the program can store for you. If you press O(perations) D(igipath) S(ave), you'll be prompted to enter a two-letter code for that path via whatever path you choose, such as:

NJ VIA KC2CWT-15,N2MH-15,KB2EAR-1,W2HOB-15

to get to Southern New Jersey from Northern Westchester. To see which paths you've stored, press O(perations) D(igipath) L(ist). The main purpose of these alternate paths is to keep the QRM to a minimum and to use the most direct and, sometimes, the only feasible path.

The weather systems feature of APRS allows you to see various weather information in real-time which is transmitted by stations with a Peet Bros. or Davis Weather Station. Depending on which version of APRS you're using (as of now, July 1998, it's 8.17) and the options the weather station has, you can get different kinds of information including temperature, rainfall amounts (to the 1/100th inch) in the past hour and 24 hour periods, wind speed, direction and gusts and barometric pressure. By pressing W(eather) I(cons), or W(eather) D(isplay), you'll see a list of options to choose from. These have changed for the better) in the last few versions, so I can't be specific.

If at any time you wish to cease transmitting without actually shutting down the program, simply touch C(ommands) X(mit). This will disable the timer within APRS. When you want to send a specific packet (most often your position), you can do so by pressing X(mit) P(osition) [or S(tatus), M(essage), O(bject) or A(ll), as the case may be.]

In order to find a station on the screen, you can always use the O(perations) F(ind) (what else!) command. If you want to see something really neat, try O(perations) R(eplay), and type in the callsign of a mobile station. What you'll see the station's track being replayed. To access your TNC you'd use O(perations) C(omms) T(NC) which leads you to a very basic terminal screen. To get stations to appear on your screen faster (within two or three minutes) use O(perations) Q(uery), followed by a radius in miles from you.

Now that you've been on the air with APRS for a few hours, you don't necessarily want to wait for all those stations to reappear if, for some reason, you have to exit the program. No problem. When you shut down APRS by pressing Q(uit) Q(uit) <cr>, it asks you if you want a backup of this information, which it does by default. Next time you fire it up, you press F(iles) L(oad) B(ackup). Every time you shut APRS down it'll save this file, replacing the previous copy. Be aware, though, that all of those packets are time-stamped, and any station's data in this backup that was heard more than two hours ago will "gray-out" (APRS considers them to be inactive and makes room for more stations

that way.)

One thing to remember when playing with APRS is that the best way to learn, as with anything else, is by doing. You can play with the commands as much as you want. You're not going to BREAK anything! About the worst thing that can happen is a lockup, and this is a rare thing. Usually the three-fingered-salute (Ctrl-Alt-Del) will get you out of it and you'll have to start over. So play with the thing. I mean, how do you think I learned all this about APRS stuff, by reading about it?

Speaking of reading about it, yes I did. It's all right there in the APRS distribution zip file. You can always read those files by pressing F1 F(iles) and typing in the name of the file you want to see. One suggestion: if you're a slow reader, press the down-arrow button once in a while as APRS seems to get impatient with you when it just sits there while you re-read that paragraph for the umpty-umph time and shoves you back into the program.

There are dozens of these readme files in the "README" folder. You can also see them (at your leisure and there for the printing) by using any old text editor. Many of the answers to your questions can be found there, sometimes buried deep and not quite as visible as you'd like.

You can also purchase "Getting On Track with APRS", which was written by none other than Stan Horzepa (WA1LOU). It's available at many ham radio shops as well as your local hamfest. Or you can order it directly from the ARRL. Stan's book will walk you through much of what you'd like to know, in somewhat more detail than I can here. Mr. Horzepa is the author of "Digital Dimensions" in QST magazine, and also runs the WA1LOU-15 digipeater in Wolcott, CT.

I hope you enjoyed this series on APRS and hope to see you on the map in the near future. Whenever I see a new station on the screen I try to send them a one-liner welcoming them to APRS and offering live assistance and advice. Feel free to take advantage of this, or ask questions of any station on the air at that time. We're all very excited about this program and think that "the more, the merrier" is the way to go. We've gotten a lot of "converts" in the last few years and this situation can only improve, so come and join us on 144.390! 73

--
Arte Booten <n2zrc@webspan.net> EC/RO for Bronx County, NYC ARES/RACES
PGP Key Fingerprint: 22E5 3EC7 4E3C 2460 C570 BACA E48B 71D5 0F33 54AD
Riverdale, NY [FN30bu] Cruise Missile Coordinates: 4052.71N/07354.06W
TM-V7a/KPC-3 6.0/GPS-III Packet: N2ZRC@KB2VLX.#BRONX.NY.USA

"There is an undetonated Chroniton Torpedo lodged in the hull."
"Do not attempt to disarm it until I arrive." "Arrive quickly!"
-Seven of Nine & Tuvok, Star Trek: Voyager; "Year of Hell"

103. Re: [APRSSIG:25933] CONCERNS

From: Keith Kotch <kf4bxt@geocities.com>
Date: Sun, 05 Jul 1998 23:51:49 -0400
To: aprssig@tapr.org
Message-ID: <35A049D5.28C9BB4C@geocities.com>
Rendered body type: text/plain

Here's my take on this. If I'm wrong, then I need to give up my FCC license, resign from ARES and Skywarn and sell my equipment. I'm very passionate about volunteerism and public service. My God-given spiritual gift is that of service so it is in my very nature to want to help others above myself. That is one reason I had the desire to become a Ham more than 25 years ago (never did it until 3 years ago). The same reason I became a volunteer Fire Fighter some 20 years ago and an Emergency Medical Technician 14 years ago and maintain my certification every 2 years even though I've never been employed full-time in either of those avocations.

The BLN referred to was mine, I believe. I WILL NOT take my time away from family, church, work, etc. to provide any support for Red Cross if all I am to do is provide a shelter status report and relay that the shelter manager needs to call the ARC chapter house, something that can be done over a telephone. The Red Cross policy is that NO health and welfare inquiries will be attempted until after 3 days of an event. Would YOU want to sit back and wait 3 days to find out where your kids wound up after your family got separated in traffic evacuating your ENTIRE COUNTY? or, trying to locate your mother upon flying into the area from out of state and finding out she had to evacuate and didn't have time to let you know where she went? Absolutely ludicrous! MY policy is, when Red Cross won't or can't help, Amateur Radio Can and

MUST!!!! I don't force our desire to help on anyone, but I also don't
refuse it either.

This is one button of mine that has definately gotten pushed!
Amateur Radio is a Public Service, not a Red Cross service. BTW,
apparently the APRS message got through to someone up north in the
state. I didn't see a response but hopefully, someone took the ball and
kept it rolling and located this individual. If so, THANK YOU and thank
Amateur Radio and APRS for coming through!

Keith, KF4BXT
Seminole Co. (Florida) ARES AEC and Skywarn Manager
kf4bxt@geocities.com

kd4emi@juno.com wrote:
>
> This afternoon I was looking at msgs on APRS. I came across (no name
> mentioned), a bltn asking if anyone had info about a certain person at a red cross shelter.
>
> The msg was posted in a county well north of me, but do to propagation
> etc, made it here, and it also undoubtedly made it on the internet as
> well.
>
> Here is the concern:
>
> I have seen it posted in QST and other pubs that the red cross has a very specific policy about
"victims" or shelter dwellers names being broadcast over the radio, both Ham and their "own" red cross
freqs. The policy as I last heard it was that they do not allow any names over RF. While this may seem
silly, after all, how do you locate someone without giving their name , it is an established policy.
Is anyone familiar with this ?
>
> Mike KD4EMI@JUNO.COM
>
> ____
> You don't need to buy Internet access to use free Internet e-mail.
> Get completely free e-mail from Juno at http://www.juno.com
> Or call Juno at (800) 654-JUNO [654-5866]

104. Re: [APRSSIG:25929] RE: WWIN????

From: "Kevin Heyboer" <kd4uyr@gte.net>
Date: Mon, 6 Jul 1998 07:51:45 -0400
To: <k4hg@tapr.org>, <aprssig@tapr.org>
Message-ID: <001b01bda8d4$75a32080$4ff3ffd0@kh>
Rendered body type: text/plain

First, let me apologize for the extra bulletins my system has been putting
out over the past few days...this was a programming error caused by an
upgrade necessitated by the NWS folks changing some of the naming
conventions used on EMWIN system....I believe the error has been corrected
and only the severe wx bulletins and tropical stuff should now be going out.

However, regarding the internet data stream...I do not connect to the Inet
for that purpose....any bulletins on the Inet stream arrive via the local
IGate. I had asked Demos early on to budlist the WWIN transmitter from the
IGate, but he pointed out to me that NWS Ruskin serves 15 counties and we
only have reliable point to point VHF APRS between 3 of those counties, so
the choice was to leave it on the IGate.....again...the regular forecasts
and wx data that have been going out have been stopped....I hope.

Kevin Heyboer KD4UYR
Coordinator, Pinellas SKYWARN
-----Original Message-----
From: Steve Dimse K4HG <k4hg@tapr.org>
To: aprssig@tapr.org <aprssig@tapr.org>
Date: Sunday, July 05, 1998 1:33 PM
Subject: [APRSSIG:25929] RE: WWIN????

>On 7/5/98 10:59 AM Demos Doulou (ddoulou@gte.net) wrote:
>
>>Ok, lets over exaggerate a little. It is no way every five minutes. With
>>our 6 to 8 weather stations set at 2 minutes TX rates and the wwin
info,and
>>a dozen other stations online doing keyboarding, our local network is no
>>where near straining. Ill let Kevin respond to what his program is
putting
>>out in bulletin format. Unless the info that is going out on the inet is
>>causing programs to crash, (like some packets do with winaprs), then I
hope

>>we do not start censoring the inet feed. Maybe there can be a filter
>>designed in to the program that would filter out all data from areas you
do
>>not want to see. But lets not start censoring our best asset
>
>Perhaps I misread Jim's post. I thought he was saying that the bulletins
>were being IGATE'ed onto his RF LAN. This should not, and must not,
>happen. However, if I did misread Jim post and he is complaining about
>data on the internet, then I can give a very definite answer...
>
>I maintain the right to censor anything that is being sent direct to the
>internet server. For example, someone wanted to write a program to send
>all NWS weather reports to the server...I forget the number but hundreds
>every hour. I vetoed this idea. Another ham wants to directly send
>propagation information to the server, a few times a day. This I feel is
>good...the decision is on a case by case basis.
>
>However, anything that a local ham feels is appropriate for his rf
>network is welcome on APRServe, and will not be censored. In this case,
>the WWIN data is sent on RF and then picked up by an IGATE. This is
>acceptable, and it will not be removed from the internet stream.
>
>On the separate issue of what gets sent on RF...
>
>If I were a local user I would probably object to the volume of
>information being sent out. There are routine weather forcasts and a
>large number of blank lines being sent. I think any emergent weather that
>threatens a local area ought to be transmitted, but routine items, like
>forcasts and tropical weather summaries, ought not to clutter a LAN.
>However, this is an issue for each local area to settle based on their
>own needs.
>
>The problems of large numbers of bulletins is not limited to WWIN. Most
>of the bulletins are not of interest to me. You could turn off the
>bulletin sound, but then you might miss a local bulletin. I solve this
>with separate RF and internet computers, but if you only have one machine
>for APRS, there isn't a good answer. Perhaps Brent and TSB will consider
>splitting the RF and internet traffic...
>
>Steve K4HG
>

105. Re: CONCERNS

From: wo4u@juno.com
Date: Mon, 6 Jul 1998 09:33:57 -0400
To: kf4bxt@geocities.com, aprssig@tapr.org
Message-ID: <19980706.093358.3630.4.wo4u@juno.com>
Rendered body type: text/plain

Keith Kotch wrote:
>Here's my take on this. If I'm wrong, then I need to give up my FCC
>license, resign from ARES and Skywarn and sell my equipment. I'm very
>passionate about volunteerism and public service. My God-given spiritual
>gift is that of service so it is in my very nature to want to help
>others above myself.

REALITY .....

If the Shelter Manager or the Local RC Director gives you a message with
names in it to deliver - then do it. It often amazes me how HAMS keep
looking for written "rules" to tell them what to do or not to do. If
phone service is OUT and the RC communication system is almost non
existant then the RC needs our help. By using Packet, we can help
prevent the casual scanner operator from obtaining confidential
information. This is the reason I sent out the prior message about using
alternate frequencies for APRS.   No one has ever been fined, lost their
license or been sent to jail for helping out in situations like this. I
wish we could stop running from things that are not chasing us.

Yes, to those that are quoting the RC publications - I know they exist
and have taught the class.   They were written for good reason but
often, in real disasters, the rules have to be interpreted to get the job
done.

Paul - WO4U

_____
You don't need to buy Internet access to use free Internet e-mail.
Get completely free e-mail from Juno at http://www.juno.com

Or call Juno at (800) 654-JUNO [654-5866]

106. Digi Alias idea

From: "Paul E. Knupke, Jr." <pk@ij.net>
Date: Mon, 6 Jul 1998 10:11:56 -0400
To: <aprssig@tapr.org>
Message-ID: <000b01bda8e8$0939bda0$99dbdfcf@pknupke.tdts.com>
Rendered body type: text/plain

After the discussion about WWIN and other products that are for more or less local use it seems that developing a DIGI alias that applies for each NWS CWA (County Warning Area) so information can be propogated but not outside the area on RF (what is distributed by APRServe is a who different story) would be useful.

For instance digis in the the Tampa Bay/Ruskin CWA could have aliases of TBW so that bulletins, county warnings, etc. could be distributed and not use any generic aliases at all.

I realize we're getting thin on aliases and that digis have to support multiple aliases before this feasible but more and more digis seem to be using either KPC3/3+ or PacComm Version 4.x firmware.

73,
Paul
KR4YL
(still working on a getting a digi for the north suncoast going..)

107. Street Atlas 5.0 and Win 98

From: "Jacques Voisin" <jvoisin@evcom.net>
Date: Mon, 6 Jul 1998 10:25:46 -0400
To: <aprssig@tapr.org>
Message-ID: <000301bda8e9$f8103520$b6d98fd0@k6-300>
Rendered body type: text/plain

Does any one have problem installing SA 5 on Win 98 system. Thought I had problem with CD Rom but works fine on Win 95 system? Advised Delorme of the problem.
Jacques C. Voisin, KD4TWB, AAR4JI
http://evcom.net/~jvoisin/kd4twb.htm
E-Mail: jvoisin@evcom.net

108. Re: [APRSSIG:25882] 440 Freq?

From: "Paul Toth" <k2sec@gte.net>
Date: Mon, 6 Jul 1998 10:46:52 -0400
To: <rbost@itexas.net>, <aprssig@tapr.org>
Message-ID: <01bda8ec$e9d2daa0$40be2599@win95-adm>
Rendered body type: text/plain

441.050 is one of several frequencies that have been recommended for packet. 441.150 is another. The ARRL bandplan also notes a number of frequencies in the low 430 MHz range as well, particularly for higher speed packet.

While the local Coordinating bodies may have a recommendation, this is one of those issues they are not well positioned to address. As Bob Bruninga noted a couple weeks ago, this is a NATIONAL WIRELESS NET. And it works best when everyone is on the SAME frequency. This is where the endorsement of a frequency by the ARRL could smooth the road to success for 440 APRS. If grouping the packet frequencies together is important, then something in the 441.00-441.250 may be in order. If not, how about 446.150?

73!

Paul J. Toth
K2SEC

-----Original Message-----
From: Roy Bost <rbost@itexas.net>
To: aprssig@tapr.org <aprssig@tapr.org>
Date: Thursday, July 02, 1998 9:25 PM
Subject: [APRSSIG:25882] 440 Freq?

>Once again I'm considering creating a 2m-440 gate. Does anyone have any
>idea of what freq to use? Especially in Texas?! The only band plan I can
>find is in the ARRL Repeater Dir. Does anyone have any problem with
441.050

>mHz?
>
>Roy W Bost
>N5TAM
>rbost@itexas.net
>

109. Re: [APRSSIG:25949] Re: CONCERNS

From: Jon Ogden <jono@enteract.com>
Date: Mon, 6 Jul 98 10:01:18 -0500
To: <wo4u@juno.com>, <aprssig@tapr.org>
Message-ID: <199807061459.JAA19364@tapr.org>
Rendered body type: text/plain

>No one has ever been fined, lost their
>license or been sent to jail for helping out in situations like this. I
>wish we could stop running from things that are not chasing us.

Amen, Hear! Hear!

It's kind of like running a red light or speeding if your life depends on
it. If your mission is to save someone's life or property, I don' think
the FCC or anyone else is going to revoke your license. And also, the RC
is NOT the FCC. Their rules are their rules only. We are not legally
bound by them, although it may generally be good practice to adhere to
them, but not always.

Until we stop being panzies and so scared of breaking someone's rules, we
prevent our hobby and communication skills from being legitimized in the
eyes of the public.

Say you are not a ham. Think if it was one of your family members who
was missing and I found them in my local shelter. I then communicated the
issues to others who got word to you about a loved one's wearabouts.
What is your opinion then of ham radio? A nusiance? I think not. I
think your opinion would be forever changed. Let's say though I
"followed the rules" and didn't contact anyone. Now what's your vision
of ham radio?

Security issues are important but not that important. A shelter is full
of people and has some level of security. It would be difficult for some
scoundrel to rob or steal or otherwise harm someone in a building full of
people.

Let's lighten up and put people's individual needs and priorities and
safety above the rules of the collective.

73,

Jon
KE9NA

Jon Ogden

jono@enteract.com
www.qsl.net/ke9na

"A life lived in fear is a life half lived."

110. Re: [APRSSIG:25950] Digi Alias idea

From: Dave Kaplan <fluidpwr@m1.sprynet.com>
Date: Mon, 06 Jul 1998 10:01:29 -0500
To: aprssig@tapr.org
Message-ID: <3.0.5.32.19980706100129.007d17a0@m1.sprynet.com>
Rendered body type: text/plain

At 09:18 AM 7/6/98 -0500, you wrote:
>After the discussion about WWIN and other products that are for more or less
>local use it seems that developing a DIGI alias that applies for each NWS
>CWA (County Warning Area) so information can be propogated but not outside
>the area on RF (what is distributed by APRServe is a who different story)
>would be useful.
>
<snip>

I think Paul has the beginning of the right idea (imho). I think it would
be wounderful if there was a full time feed of WWIN information through the

I-Gate. What we would then need is for the APRS authors to build into the programs a feature that would allows selected watches and warnings to be transmitted.

For example. This week I hope to install a full time Wide/I-Gate at the local community college. This will be a 24/7 I-Gate. Since Sioux City is partly in Iowa, Nebraska and South Dakota, I would like to be able to tell the MacAprs program in what counties in each state the I-Gate should look for and then transmit those via the attached wide.

Does this idea have any merit??

Dave

111. Schaumburg, Il APRS Demo July 12

From: Skip Allison-CFAD07 <Skip_Allison-CFAD07@email.mot.com>
Date: Mon, 6 Jul 1998 10:01:52 -0500
To: aprssig@tapr.org
Message-ID: <"Macintosh */PRMD=MOT/ADMD=MOT/C=US/"@MHS>
Rendered body type: text/plain

The Motorola Amateur Radio Club will be doing an Amateur Radio demo at the Motorola Museum in Schaumburg, Il on July 12. Among other things, we will be demonstrating APRS. We plan have a tracker up in a small plane cruising the Chicago area. The plane will also be equiped with an ATV transmitter transmitting live fast scan video on 910.25 AM. The coordination will be on the Motorola repeater (443.725 PL 2A). We did a test run last week and the APRS worked out very well. The call will be K9MOT-7. We will probably be flying in the early afternoon around 2 PM.

Skip
K9SA

112. password?

From: "O.C. Winton wn1z" <wn1z@sojourner.wn1z.ampr.org>
Date: Mon, 06 Jul 1998 08:31:14 -0700
To: aprssig@tapr.org
Message-ID: <6093@babylon.wn1z.ampr.org>
Rendered body type: text/plain

I may have misinterpreted the discussion -- just
checking -- but i read something here about needing
a password string to get into the aprs server. Is this
correct? That having a registered version of one of the
programs isn't enough to set up a fully functional igate?
Thanks

Orrin wn1z
Monterey CA

113. Re: Yaesu 8 pin mic plug

From: Dave.Ackrill@NOTESMAIL.powergen.co.uk
Date: 06 Jul 1998 15:45:29 +0000
To: aprssig@tapr.org
Message-ID: <980706154529Z*/G=Dave/S=Ackrill/O=NOTESMAIL/PRMD=POWERGEN/ADMD=CWMAIL/C=GB/@MHS>
Rendered body type: text/plain

This may seem like teaching-my-Grandmother-to-suck-eggs, but has no one suggested using a multimeter set to Volts, and going round the pins until you find one with 8V on it?

But then, maybe I'm missing some subtle problem with the rig microphone socket?

Cheers - Dave (G0DJA)

114. Re:CONCERNS

From: "David K. Bodman" <dbodman@lucent.com>
Date: Mon, 06 Jul 1998 12:03:46 -0400
To: aprssig@tapr.org
Message-ID: <3.0.1.32.19980706120346.007cdc20@atsmail.gc.lucent.com>
Rendered body type: text/plain

Actually, a few year ago, while testing out a new portable setup at an RC shelter, I used a packet program called TPK to send information from the shelter to the EOC. One of the advantages of using the TPK was that TPK compressed the packet before sending it, hence even other paket stations monitoring could not read the message while it was being sent.

I've often thought that a very good idea...cuts down on bandwith (because
the packet is smaller, being "zzipped" on the fly), and somewhat secure.
Any comments??

David K. Bodman, KD4CLJ
Greensboro, NC

115. Re: [APRSSIG:25954] Re: Digi Alias idea

From: Steve Dimse K4HG <k4hg@tapr.org>
Date: Mon, 6 Jul 1998 12:45:41 -0400
To: <fluidpwr@m1.sprynet.com>, "aprssig" <aprssig@tapr.org>
Message-ID: <199807061645.LAA27267@tapr.org>
Rendered body type: text/plain

On 7/6/98 11:07 AM Dave Kaplan (fluidpwr@m1.sprynet.com) wrote:

>I think Paul has the beginning of the right idea (imho). I think it would
>be wounderful if there was a full time feed of WWIN information through the
>I-Gate. What we would then need is for the APRS authors to build into the
>programs a feature that would allows selected watches and warnings to be
>transmitted.
>
>For example. This week I hope to install a full time Wide/I-Gate at the
>local community college. This will be a 24/7 I-Gate. Since Sioux City is
>partly in Iowa, Nebraska and South Dakota, I would like to be able to tell
>the MacAprs program in what counties in each state the I-Gate should look
>for and then transmit those via the attached wide.
>
>Does this idea have any merit??
>
If you are talking about feeding it directly into APRServe, the feeding
of just watches and warning is being looked at, but it would require a
lot of work. The problems Kevin is having just keeping on top of the
alerts for a single county shows the magnitude of the problem.

Also, this would increase by a good amount the volume of data flowing
through APRServe, and that would decrease the number of users each server
could support. Nothing is easy...

Steve K4HG

116. Re: [APRSSIG:25956] password?

From: Steve Dimse K4HG <k4hg@tapr.org>
Date: Mon, 6 Jul 1998 12:45:47 -0400
To: <wn1z@sojourner.wn1z.ampr.org>, "aprssig" <aprssig@tapr.org>
Message-ID: <199807061645.LAA27269@tapr.org>
Rendered body type: text/plain

On 7/6/98 11:36 AM O.C. Winton wn1z (wn1z@sojourner.wn1z.ampr.org) wrote:

>I may have misinterpreted the discussion -- just
>checking -- but i read something here about needing
>a password string to get into the aprs server. Is this
>correct? That having a registered version of one of the
>programs isn't enough to set up a fully functional igate?
>Thanks
>
Yes. The issue I was discussing was feeding data into it from a source
other than APRS. The example I gave was someone that wanted to feed
hourly NWS weather reports into the server. To do something like this,
you need to manually supply the logon string.

Steve K4HG

117. APRS Program

From: "Paul E. Knupke, Jr." <pk@ij.net>
Date: Mon, 6 Jul 1998 12:46:31 -0400
To: <aprssig@tapr.org>, <aprs-fl@tapr.org>
Message-ID: <002f01bda8fd$a5df29a0$99dbdfcf@pknupke.tdts.com>
Rendered body type: text/plain

The Clearwater Amateur Radio Society will be having an APRS program that
will have Paul, K2SEC, speaking and demonstrating APRS. The meeting is
Thursday July 9th at 7:30PM at the Clearwater Red Cross 624 Court Street in
downtown Clearwater. Talk-in 146.97 (103.5) - 224.94 - 444.15 (103.5) -
444.575 (131.8) all linked

73,
Paul
KR4YL

118. compressed positions

From: Wes Johnston <kd4rdb@eagnet.com>
Date: Mon, 06 Jul 1998 13:34:27 -0400
To: aprssig@tapr.org
Message-ID: <3.0.32.19980706133425.006cfe1c@gena>
Rendered body type: text/plain

As I understand it, all versions of aprs can decode the compressed mic-e packets. When are we going to get the ability to TX them from APRS, WINAPRS, APRSPLUS? It would ease the crowding in some areas (although dumb trackes are still S.O.L.). I had understood before that not all versions of aprs would read these packets and we were waiting for everyone to get upgraded.
Wes
Email: mailto:kd4rdb@usa.net
APRS: http://www.qsl.net/kd4rdb/aprs.htm
A good traveler has no fixed plans and is not intent on arriving.

119. Re: [APRSSIG:25953] Re: CONCERNS

From: "Thomas_Busch" <Busch_T@se.crane.navy.mil>
Date: Mon, 6 Jul 1998 12:42:10 -0500
To: aprssig@tapr.org
Message-ID: <199807061742.MAA13832@cobra.se.crane.navy.mil>
Rendered body type: text/plain

>From what I've learned about Red Cross procedures, their main concern about the shelter information is the security and privacy of the people housed there.

I believe they are mostly worried about the press harrassing their charges. Also, be very careful when the press asks about specific families and incidents. For example, what would your answer be if the press asked you about someone who had a heart attack during an emergency? What if you passed information along that later proved to be incorrect? We are not a newsgathering organization.

We have to consider the source of the request.

Tom Busch, WB8WOR

120. National APRS 440 Frequency (again)

From: Ralph Fowler <rwf@BSRG.org>
Date: Mon, 06 Jul 1998 13:13:22 -0400
To: aprssig@tapr.org
Message-ID: <199807061745.NAA12986@cocacola-bh.cokecce.com>
Rendered body type: text/plain

Paul Toth mentions the ARRL band plan and the need for a National APRS Net frequency on 440 (again). Every time this comes up, we end up hashing out the various band plans vs the old, obsolete, ARRL "Band Plan" but still nothing gets decided.

Last year, the AMSAT folks were able to take a frequency on VHF that was fairly clear in many areas (because it had been "reserved" for future satellites) and reallocate it for APRS. It almost worked everywhere, but there have been some problems- some major.

However, don't expect TAPR, ARRL and AMSAT to come running to the rescue here this time, unless you plan to have existing satellite spectrum reallocated- because there just isn't any secret reserved spectrum this time. If you want a National frequency, you will have to work with all of the Spectrum Managers and Coordinators to identify and coordinate something that works everywhere. It may not be possible. I seriously doubt that the ARRL is going to endorse ANYTHING on 440 like they rubber stamped the 2m version! The ARRL has said that they do not intend to get into the coordination and band planning business.

If you think 2M was hard (in some areas), then wait until you try 440!

About four years ago, the SERA re planned almost the entire 420-450 band for our area. This was done because the existing (and also the ARRL) band plans all discriminated against one user or another, and there were uses that were not accommodated. The end result was a plan that accommodated

everyone and has been looked at and envied by quite a few other areas.

I have offered a list of the frequencies we use numerous times as a
starting point, but so far no one has taken the ball and run with it.

In the 8 SE states coordinated by SERA, 441.05 as well as 441.15 are
band-planned and available to the packet users. I seem to recall that
about everyone and his brother is on 441.05, however.   Seems like that is
the most commonly picked channel when someone is putting something on 9600,
and that may even be the home of some existing networks. Below are some
clippings from the SERA web pages http://www.sera.org

The group of "channels" in that area are:

70 cm NBFM Digital/Packet Simplex

440.9125   440.9250   440.9375   440.9500   440.9625   440.9750
440.9875   441.0000   441.0125   441.0250   441.0375   441.0500
441.0625   441.0750   441.0875   441.1000   441.1125   441.1250
441.1375   441.1500   441.1625   441.1750
441.000 is the National FM Digital Simplex Calling Frequency

(I think some of those are repeater inputs or possibly outputs in Southern
California)

If someone wanted to set up a duplex network of FM packet, he could choose
from the following frequencies:
Note that in the "ARRL Band plan" (term lightly used), I think some of
these are listed as voice link frequencies.

70 cm NBFM Digital Repeater/Digital Duplex Backbone

18 Duplex Channels, 12.5 KHz splits, (5 MHz In/Out - Hi In - Lo Out)

445.5125-440.5125   445.5250-440.5250   445.5375-440.5375
445.5500-440.5500   445.5625-440.5625   445.5750-440.5750
445.5875-440.5875   445.6000-440.6000   445.6125-440.6125
445.6250-440.6250   445.6375-440.6375   445.6500-440.6500
445.6625-440.6625   445.6750-440.6750   445.6875-440.6875

445.7000-440.7000   445.7125-440.7125   445.7250-440.7250

Paul mentions 430 MHz channels for high speed packet.   Not in this area!!!!
If someone wanted to use high speed packet (19.2k and above), we have 19
channel pairs for that. There are some for the really wide band 56k stuff
and some for the narrower uses too:

70 cm WB Digital Duplex Backbones/Links

19 Duplex Chans, Mixed 50 & 100 KHz. (5 MHz. - Hi In/Lo Out).
Check with your coordinator for polarization (either V or H)

445.0250-440.0250   445.0500-440.0500   445.0750-440.0750
445.1000-440.1000   445.1250-440.1250   445.1500-440.1500
445.1750-440.1750   445.2000-440.2000   445.2250-440.2250
445.2500-440.2500   445.2750-440.2750   445.3000-440.3000
445.3250-440.3250   445.3500-440.3500   445.3750-440.3750
445.4000-440.4000   445.4250-440.4250   445.4500-440.4500
445.4750-440.4750

Paul's suggested 446.15 is a simplex voice frequency here. Might not sit
to well with the simplexers to set up APRS on one of those channels.

I'd suggest, if we want a truly National frequency, that they take a
frequency from the SERA list and check for activity. At the same time,
check with all other Coordinators and Spectrum Managers to see if something
meshes. Maybe a matrix of the various frequencies could be created and the
divide and conquer method used.

You may wish to check with Ev Tupis about how he came about settling on
53.53 for PropNet. He checked with all the Coordinators he could before
settling on a frequency with little or no conflict.

If Paul or someone wants to tackle this, I will be glad to bring any valid
suggestions up before the National Frequency Coordinator's Council on their
private remailer.

Ralph Fowler N4NEQ
Atlanta

http://BSRG.org

Paul Toth wrote:
>441.050 is one of several frequencies that have been recommended for packet.
>441.150 is another. The ARRL bandplan also notes a number of frequencies in
>the low 430 MHz range as well, particularly for higher speed packet.
>
>While the local Coordinating bodies may have a recommendation, this is one
>of those issues they are not well positioned to address. As Bob Bruninga
>noted a couple weeks ago, this is a NATIONAL WIRELESS NET. And it works
>best when everyone is on the SAME frequency. This is where the endorsement
>of a frequency by the ARRL could smooth the road to success for 440 APRS.
>If grouping the packet frequencies together is important, then something in
>the 441.00-441.250 may be in order. If not, how about 446.150?
>
>73!
>
>Paul J. Toth
>K2SEC
>
>
>-----Original Message-----
>From: Roy Bost <rbost@itexas.net>
>To: aprssig@tapr.org <aprssig@tapr.org>
>Date: Thursday, July 02, 1998 9:25 PM
>Subject: [APRSSIG:25882] 440 Freq?
>
>
>>Once again I'm considering creating a 2m-440 gate. Does anyone have any
>>idea of what freq to use? Especially in Texas?! The only band plan I can
>>find is in the ARRL Repeater Dir. Does anyone have any problem with
>441.050
>>mHz?
>>
>>Roy W Bost
>>N5TAM
>>rbost@itexas.net
>>
>

121. Re: [APRSSIG:25912] Re: APRS and LINUX

From: "Roderick, Ren" <ren.roderick@intp.com>
Date: Mon, 06 Jul 98 10:45:11
To: aprssig@tapr.org
Message-ID: <9806068997.AA899747111@intp.intp.com>
Rendered body type: text/plain

Richard also has more information on his PerlAPRS page at:

   http://people.qualcomm.com/rparry/perlaprs

as well as more interesting goodies on his home page:

   http://people.qualcomm.com/rparry

Ren WA7QFR

_____ Reply Separator _____
Subject: [APRSSIG:25912] Re: APRS and LINUX
Author: b.davoren@clear.net.nz
Originator: aprssig@tapr.org at Internet-Mail
Date: 7/4/98 2:52 AM

Steve Dimse K4HG asked if Richard Parry,s article on GPS,APRS and LINUX was
available "on Line" following its publication in the JULY issue of the

LINUX JOURNAL.

Not to my knowledge, but here are several URL,s that may help...

http://www.linuxjournal.com/
 The home page with access to on-line index of articles from back
issues,on-line tables of contents and selected articles from back issues.

http://www.linuxgazette.com/
 The on-line magazine which includes Linux tips and articles.

http://www.linuxresources.com/
 A general directory of Linux resources including pointers to other sites.

Hope this helps

Regards
Basil,ZL2UT
b.davoren@clear.net.nz

122. RE: [APRSSIG:25964] National APRS 440 Frequency (again)

From: "Demos Doulou" <ddoulou@gte.net>
Date: Mon, 6 Jul 1998 14:02:57 -0400
To: <rwf@BSRG.org>, <aprssig@tapr.org>
Message-ID: <000401bda908$4e6f6e40$05f3ffd0@wingate>
Rendered body type: text/plain

There are a two frquecies which FADCA has reserved for APRS in Florida

446.150 and 441.125

73

Demos Doulou KR4US
Pinellas Cty, Florida
 ACS Radio Officer
kr4us@amsat.org
ddoulou@gte.net

123. Re: [APRSSIG:25954] WWIN was Re: Digi Alias idea

From: Dave Kaplan <fluidpwr@m1.sprynet.com>
Date: Mon, 06 Jul 1998 13:09:10 -0500
To: Steve Dimse K4HG <k4hg@tapr.org>
Cc: aprssig@tapr.org
Message-ID: <3.0.5.32.19980706130910.0080b7b0@m1.sprynet.com>
Rendered body type: text/plain

At 12:45 PM 7/6/98 -0400, you wrote:
>On 7/6/98 11:07 AM Dave Kaplan (fluidpwr@m1.sprynet.com) wrote:
>
>>I think Paul has the beginning of the right idea (imho). I think it would
>>be wounderful if there was a full time feed of WWIN information through the
>>I-Gate. What we would then need is for the APRS authors to build into the
>>programs a feature that would allows selected watches and warnings to be
>>transmitted.
>>
>>For example. This week I hope to install a full time Wide/I-Gate at the
>>local community college. This will be a 24/7 I-Gate. Since Sioux City is
>>partly in Iowa, Nebraska and South Dakota, I would like to be able to tell
>>the MacAprs program in what counties in each state the I-Gate should look
>>for and then transmit those via the attached wide.
>>
>>Does this idea have any merit??
>>
>If you are talking about feeding it directly into APRServe, the feeding
>of just watches and warning is being looked at, but it would require a
>lot of work. The problems Kevin is having just keeping on top of the
>alerts for a single county shows the magnitude of the problem.
>
>Also, this would increase by a good amount the volume of data flowing
>through APRServe, and that would decrease the number of users each server
>could support. Nothing is easy...
>
>Steve K4HG
>

Steve,

Everything you say is true...
Yet, what would the cost be of placing many WWIN receivers around the
country vs one and feeding it through the internet. As I said before, just
an idea but I think that this feed could make APRS suddenly more attractive
to many users at a minimal cost

124. Re: Yaesu 8 pin mic plug

From: n8exf@juno.com (R L BOEHM)
Date: Mon, 6 Jul 1998 13:58:37 -0400
To: Dave.Ackrill@NOTESMAIL.powergen.co.uk
Cc: aprssig@tapr.org
Message-ID: <19980706.141319.12494.0.N8EXF@juno.com>
Rendered body type: text/plain

Problem is, there is voltage on the UP DOWN pins, and more than just the
+8v pin.
73 de Bob, N8EXF // KN
homepage   http://www.qsl.net/n8exf

Don't sweat the petty things, and don't pet the sweaty things

On Mon, 6 Jul 1998 10:51:19 -0500 (CDT)
Dave.Ackrill@NOTESMAIL.powergen.co.uk writes:
>This may seem like teaching-my-Grandmother-to-suck-eggs, but has no
>one suggested using a multimeter set to Volts, and going round the
>pins until you find one with 8V on it?
>
>But then, maybe I'm missing some subtle problem with the rig
>microphone socket?
>
>Cheers - Dave (G0DJA)
>
>

_____
You don't need to buy Internet access to use free Internet e-mail.
Get completely free e-mail from Juno at http://www.juno.com
Or call Juno at (800) 654-JUNO [654-5866]

125. RE: [APRSSIG:25967] Re: WWIN was Re: Digi Alias idea

From: "Demos Doulou" <ddoulou@gte.net>
Date: Mon, 6 Jul 1998 14:34:14 -0400
To: <fluidpwr@m1.sprynet.com>, <aprssig@tapr.org>
Message-ID: <000501bda90c$ad079960$05f3ffd0@wingate>
Rendered body type: text/plain

You must remember that the EMWIN feed for the entire country is a continuous
stream of data at 9600 baud. This I think will taxs the server. Also if
this amount of continuous traffic shows up on the aprsserve stream, I will
most likely lose my ISP connection both here and at the eoc. With a average
of 700 baud as it is now, no one cares that we are connected 24 hrs.

73
Demos Doulou KR4US
Pinellas Cty, Florida
 ACS Radio Officer
kr4us@amsat.org
ddoulou@gte.net

> -----Original Message-----
> Everything you say is true...
> Yet, what would the cost be of placing many WWIN receivers around the
> country vs one and feeding it through the internet. As I said before, just
> an idea but I think that this feed could make APRS suddenly more
> attractive
> to many users at a minimal cost
>

126. Re: [APRSSIG:25953] Re: CONCERNS

From: Ray Vaughan <rvaughan@gate.net>
Date: Mon, 06 Jul 1998 14:50:21 -0400
To: jono@enteract.com
Cc: aprssig@tapr.org
Message-ID: <1.5.4.32.19980706185021.009498f8@pop.gate.net>

Rendered body type: text/plain

>Say you are not a ham. Think if it was one of your family members who
>was missing and I found them in my local shelter. I then communicated the
>issues to others who got word to you about a loved one's wearabouts.
>What is your opinion then of ham radio? A nusiance? I think not. I
>think your opinion would be forever changed. Let's say though I
>"followed the rules" and didn't contact anyone. Now what's your vision
>of ham radio?

Don't you see? Bitching about 'rules' and saying 'it can't be done' IS ham radio in the 90's! Thanks to the internet, we can even complain without wasting spectrum to do it. In the last couple of weeks, I've even heard APRS is 'broadcasting.'

I've see it on SIGs, and on the air. We're lazy as hell now. And it IS getting worse. Sure, for some hams, age or disablity is an excuse. But if you physically can't do something, leave your trap shut and let those of us who can do. It is contagious. For a while, I was doing new things (e.g. NOAA on repeaters, Ham fest info systems) partly to make some waves and get people to think outside of the box. But now I'm getting lazy too. I just had a 3 day weekend that I COULD have done a lot of ham radio projects... but why? So someone can complain on the air about the new signal?

Please. Everyone. If you can't say something constructive, keep it to yourself.

Ray, KD4BBM

127. National UHF frequency for APRS

From: "Paul E. Knupke, Jr." <pk@ij.net>
Date: Mon, 6 Jul 1998 14:43:53 -0400
To: <aprssig@tapr.org>
Message-ID: <005601bda90e$0ce655a0$99dbdfcf@pknupke.tdts.com>
Rendered body type: text/plain

I do not believe APRS will be able to find a single UHF frequency that will work nationwide. Ralph points out how SERA's bandplan works for the states covered by SERA but there are 43-44 other states that have different plans.

I believe UHF should be decided on a local/state basis/regional (in SERA's case I suppose due to the rare case of many states being covered.)

I think due to the many different plans in use that it will be impractical to secure a frequency nationally. In Florida we have two frequencies that FADCA (the digital coordinating body) has assigned for APRS usage. One is in the 441 range the other in 446 range. Paul mentions the usage of 430 frequencies for higher speed packet, and Ralph says not in SERA-land. That is a perfect example of how hard it will be to do this nationally.

In Florida we do follow the ARRL published plan but I also realize we are in the minority.   In many parts of California UHF repeaters occupy 440-450 entirely so packet unless it is repeater based isn't going to fly there.

UHF APRS will be more of a local thing based on needs of the applications and users. I do not support the attempt to secure a nationwide UHF frequency due to the great variations of bandplans. I can see that we might do it on 220 or 1296 but UHF is too crowded.

73,
Paul Knupke, Jr.
KR4YL
Florida Repeater Council District 4 Director

128. Re: [APRSSIG:25963] Re: CONCERNS

From: Jon Ogden <jono@enteract.com>
Date: Mon, 6 Jul 98 14:45:00 -0500
To: <Busch_T@se.crane.navy.mil>, <aprssig@tapr.org>
Message-ID: <199807061943.OAA10083@tapr.org>
Rendered body type: text/plain

>I believe they are mostly worried about the press harrassing their
>charges. Also, be very careful when the press asks about specific
>families and incidents. For example, what would your answer be if
>the press asked you about someone who had a heart attack during an
>emergency? What if you passed information along that later proved to
>be incorrect? We are not a newsgathering organization.

As an Amateur Radio Operator, I would give ZERO information to the press

about anyone in the shelter. I would talk about ONLY what my job was and what I had done.

Using amateur radio to aid the press is, I believe, a violation of the FCC rules and of the spirit of amateur radio (please correct me if I am wrong). If the press listens to our transmissions and learns stuff, that's different.

I think the original question was not about the press, but getting information to someone's family about their welfare or responding to H&W requests from the outside.

That I have no problem with and I belive is part of our job. It also shows we do more than just talk to each other, but rather we use our frequencies for real useful purposes.

73,

Jon
KE9NA

Jon Ogden

jono@enteract.com
www.qsl.net/ke9na

"A life lived in fear is a life half lived."

129. Re: [APRSSIG:25953] Re: CONCERNS

From: Jon Ogden <jono@enteract.com>
Date: Mon, 6 Jul 98 14:50:19 -0500
To: "Ray Vaughan" <rvaughan@gate.net>
Cc: <aprssig@tapr.org>
Message-ID: <199807061948.OAA10284@tapr.org>
Rendered body type: text/plain

>
>Don't you see? Bitching about 'rules' and saying 'it can't be done' IS ham
>radio in the 90's! Thanks to the internet, we can even complain without
>wasting spectrum to do it. In the last couple of weeks, I've even heard
>APRS is 'broadcasting.'
>

Excuse me? Were you saying I was bitching about the rules? I wasn't. I was bitching about those who bitch.

>Please. Everyone. If you can't say something constructive, keep it to
>yourself.

I thought I was saying something constructive. Maybe I misunderstand you.

73,

Jon
KE9NA

Jon Ogden

jono@enteract.com
www.qsl.net/ke9na

"A life lived in fear is a life half lived."

130. RE: [APRSSIG:25969] Re: WWIN was Re: Digi Alias idea

From: "Demos Doulou" <ddoulou@gte.net>
Date: Mon, 6 Jul 1998 15:51:59 -0400
To: <aprssig@tapr.org>
Message-ID: <000701bda917$89ce9100$05f3ffd0@wingate>
Rendered body type: text/plain

Just a note to those who would like to have a EMWIN feed on the net. I already expressed concern about this on the aprserve stream but here is a snip from a message on the emwin users forum about a new program in the

works.

">
> >On another note -- testing for "RealEMWIN" is progressing quite smoothly.
> >This software will allow you to get the EMWIN feed via the net in
> >realtime -- similar to having your own personal GOES / radio feed but a
lot
> >cheaper."

This should be out in the near future.

Demos Doulou KR4US
Pinellas Cty, Florida
 ACS Radio Officer
kr4us@amsat.org
ddoulou@gte.net

131. Re: [APRSSIG:25953] Re: CONCERNS

From: Ray Vaughan <rvaughan@gate.net>
Date: Mon, 06 Jul 1998 16:04:13 -0400
To: Jon Ogden <jono@enteract.com>
Cc: <aprssig@tapr.org>
Message-ID: <1.5.4.32.19980706200413.0092c97c@pop.gate.net>
Rendered body type: text/plain

Sorry, I should have made it clearer... I meant the collective 'you' as in
most hams. I was agreeing with you (Jon)! I meant to compare to what ham
radio should be (what you said) and what it has become (bitching about the
rules and other excuses). The sarcasm didn't come out right I guess.

Sorry for the confusion.

Ray, KD4BBM

At 02:50 PM 7/6/98 -0500, you wrote:
>>
>>Don't you see? Bitching about 'rules' and saying 'it can't be done' IS ham
>>radio in the 90's! Thanks to the internet, we can even complain without
>>wasting spectrum to do it. In the last couple of weeks, I've even heard
>>APRS is 'broadcasting.'
>>
>
>Excuse me? Were you saying I was bitching about the rules? I wasn't. I
>was bitching about those who bitch.
>
>>Please. Everyone. If you can't say something constructive, keep it to
>>yourself.
>
>I thought I was saying something constructive. Maybe I misunderstand you.
>
>73,
>
>Jon
>KE9NA
>
>
>
>---
>Jon Ogden
>
>jono@enteract.com
>www.qsl.net/ke9na
>
>"A life lived in fear is a life half lived."
>
>

132. Re: [APRSSIG:25972] Re: CONCERNS

From: Stephen Vinson <kd4wiw@ipass.net>
Date: Mon, 06 Jul 1998 16:21:51 -0700
To: jono@enteract.com
Cc: aprssig@tapr.org
Message-ID: <35A15C0F.7331@ipass.net>
Rendered body type: text/plain

Jon Ogden wrote:

> As an Amateur Radio Operator, I would give ZERO information to the press
> about anyone in the shelter. I would talk about ONLY what my job was and
> what I had done.
>
> Using amateur radio to aid the press is, I believe, a violation of the
> FCC rules and of the spirit of amateur radio (please correct me if I am
> wrong). If the press listens to our transmissions and learns stuff,
> that's different.
>
> I think the original question was not about the press, but getting
> information to someone's family about their welfare or responding to H&W
> requests from the outside.
>
> That I have no problem with and I belive is part of our job. It also
> shows we do more than just talk to each other, but rather we use our
> frequencies for real useful purposes.
>
> 73,
>
> Jon
> KE9NA
>
>
--

I have to agree with Jon. And let me say his is the first post I have
read. So I might be a little off on the original post.

Having been involved in EMS for the past 25 years I have learned as a
leader and a follower that information of an on going mission should be
routed thru a public relations officer and cleared by the head of the
operation.

I don't want to say that all news media persons are or will try to get
you to say something news worthy ... but they will try to get their
story and will use anything you say or give them. If we could give them
what we wanted them to know and not have to explain every detail we
could pass more information their way.

As the lead individual in several events, involving Emergency Medical
Service work, I have seen my words turned to their best interest. I
have made it a rule to only release carefully worded information and
only thru official channels.

Again I hope I have stuck to the topic and that my post is in no way a
flame, but as a suggestion from someone who has been there and burned.
Unfortunately it is impossible to "retract" something that has been
said.
Once it is said its out ... for good or bad.

Thanks for the band width ...

Steve
KD4WIW

==
E-mail: kd4wiw@ipass.net
Home Page: http://www.ipass.net/~kd4wiw
Packet: KD4WIW@W4RAL.#RTP.NC.USA.NOAM
==
       TOWERS ARE BEAUTIFUL !!!!
==

133. Re: [APRSSIG:25971] National UHF frequency for APRS

From: Jeff Brenton <jeffb@espi.com>
Date: Mon, 06 Jul 1998 15:44:54 -0500
To: aprssig <aprssig@tapr.org>
Message-ID: <35A13746.51DB@espi.com>
Rendered body type: text/plain

One question - when/if we have a national 2m frequency for APRS, where
is the need for a UHF frequency "nationwide"?

We need a national 2m frequency for trackers. Trackers have enough
trouble with multipath that, per empirical testing reported by others
here last year, operations at 9600 is impractical, without a heck of a
lot more infrastructure than we've been able to muster for 2m.

What 440 and faster baud rates would be good for is things like EMWIN

distribution, in APRS-friendly forms, _locally_. So, there is little
need for NATIONAL coordination.

That's my $.15 ($.02 in 1970 dollars) on the subject...
--

Jeff Brenton, Ham radio call KA9VNV
http://www.espi.com
Questionable web page: http://www.dididahdahdidit.com
Covert supporter of the Vast Right Wing Conspiracy (tm)

134. ICOM UT-106 DSP Module

From: w1eo@gw.ri.ultranet.com ("DoC" Dave Willard)
Date: Mon, 06 Jul 98 21:33:25 UTC
To: aprssig%tapr.org@switch.woonri
Message-ID: <22442@gw.ri.ultranet.com>
Rendered body type: text/plain

Has anyone used the new UT-106 DSP noise reduction module in a IC-706 MK-II?
They are hard to find apparently, leading one to think they are either
very useful or they are being changed. Either way the supply pipeline
is apparently closed temporarily.
My interest is to help fight the automotive noise while mobile on HF.
Thanks in advance for any information.

73 DoC, W1EO@gw.ri.ultranet.com
sysop @ w1on.ma.usa.noam, switch.bedford [44.56.4.1] and Boston APRS GATEway.
Data provider to NADSD-TAPR for New England (CT,NH,MA,ME,RI,VT)

135. Re: Yaesu 8 pin mic plug

From: Arte Booten <n2zrc@webspan.net>
Date: Mon, 06 Jul 1998 13:28:14 -0400
To: APRS SIG <aprssig@tapr.org>
Message-ID: <35A1092E.DAB3EE04@webspan.net>
Rendered body type: text/plain

Hi all,

Tom VanAlstyne replied to Wes with:

>The mike pin-out for the FT-2200 ...

     Is it a reasonable assumption that the pinouts for my (currently
comatose) FT-5100, and most "recent" Yaesu VHF gear? 73
--
Arte Booten <n2zrc@webspan.net> EC/RO for Bronx County, NYC ARES/RACES
PGP Key Fingerprint: 22E5 3EC7 4E3C 2460 C570 BACA E48B 71D5 0F33 54AD
Riverdale, NY [FN30bu]   Cruise Missile Coordinates: 4052.71N/07354.06W
    TM-V7a/KPC-3 6.0/GPS-III Packet: N2ZRC@KB2VLX.#BRONX.NY.USA.NA

   "There is an undetonated Chroniton Torpedo lodged in the hull."
   "Do not attempt to disarm it until I arrive." "Arrive quickly!"
      -Seven of Nine & Tuvok, Star Trek: Voyager; "Year of Hell"

136. Re: [APRSSIG:25966] RE: National APRS 440 Frequency (again)

From: "James Clay French" <kd4dla@megsinet.net>
Date: Mon, 6 Jul 1998 18:10:01 -0400
To: <aprssig@tapr.org>
Message-ID: <m0ytJSf-000C0MC@megsinet.net>
Rendered body type: text/plain

And we run into a problem here in the SouthEast portion of Michigan where
441.125 is starting to be used for NOS in the Detroit area. Can't speak for
the rest of the state though.
Plus locally also, NOS beacons out all users positions in an APRS format.
Now to fiqure out how to port all those positions to the NATIONAL
frequency.

James KD4DLA
SouthEast Michigan AMSAT Net

> From: Demos Doulou <ddoulou@gte.net>
> To: aprssig@tapr.org
> Subject: [APRSSIG:25966] RE: National APRS 440 Frequency (again)
> Date: Monday, July 06, 1998 2:08 PM
>
>

> There are a two frquecies which FADCA has reserved for APRS in Florida
>
> 446.150 and 441.125
>
>
>
> 73
>
> Demos Doulou KR4US
> Pinellas Cty, Florida
> ACS Radio Officer
> kr4us@amsat.org
> ddoulou@gte.net
>

137. Re: [APRSSIG:25954] WWIN was Re: Digi Alias idea

From: Steve Dimse K4HG <k4hg@tapr.org>
Date: Mon, 6 Jul 1998 18:44:53 -0400
To: "Dave Kaplan" <fluidpwr@m1.sprynet.com>
Cc: "aprssig" <aprssig@tapr.org>
Message-ID: <199807062244.RAA20462@tapr.org>
Rendered body type: text/plain

>
>Steve,
>
>Everything you say is true...
>Yet, what would the cost be of placing many WWIN receivers around the
>country vs one and feeding it through the internet. As I said before, just
>an idea but I think that this feed could make APRS suddenly more attractive
>to many users at a minimal cost

The thing is, the costs for the www.aprs.net system are being borne by ME. The $4k to put the server together was donated by ME. The beer to bribe the guy at the museum of science is bought by ME. The hundreds of hours of programming, testing, setup, and maintenence are performed by ME. If the hardware dies, the costs for repair are paid by ME. If the system crashes or bogs down people complain (quite vocally) to ME. Anyone that wants to is welcome to use the system for free. I do this because it interests me, I think it is cool, and the occasional thank you I get. All I ask is the right to decide what data gets dumped into it to prevent bogging down. I don't think that is much to demand, is it?

Sure, it would be better for most people if MY system supplied the info. It would be minimimal cost for everyone except ME. Great idea, unless you happen to me ME. I don't think it is cool enough to justify MY paying for another server to handle the extra load, and more importantly, MY time to modify the software. If you think this is such a cool thing, then why don't YOU buy a server, find a full time internet site, and write the software to do it?

I'm sorry if this seems harsh, but I really want to work on what I find interesting, rather than have other people dictate their needs to me...and since no one is paying me, I WILL do what I want...

And right now what I think is cool happens to be microcontrollers...

Steve K4HG

138. Map label colors

From: Richard Amirault <amirault@tiac.net>
Date: Mon, 6 Jul 1998 19:12:53 -0400 (EDT)
To: Bob Bruninga <bruninga@nadn.navy.mil>
Cc: aprssig@tapr.org
Message-ID: <Pine.BSF.3.96.980706191027.20745D-100000@shell2.tiac.net>
Rendered body type: text/plain

FYI

Running 813 and was disapointed with the unreadablity of the default map labels....a very dark blue color.

Well, if I SHUT OFF THE LABELS they change to a grey and are now *much* easier to read!

Richard Amirault N1JDU Boston, Massachusetts USA
amirault@tiac.net "Go Fly A Kite"

139. concerns

From: kd4emi@juno.com (Michael A Kantor)
Date: Mon, 6 Jul 1998 19:27:04 -0400
To: aprssig@tapr.org
Message-ID: <19980706.192704.3966.0.kd4emi@juno.com>
Rendered body type: text/plain

Since I started this thread, and have watched it, now I suppose is the time to comment.

The original question, which now has been permutated into who knows what --was

"what is the ARC policy about giving shelter victims names on the air ?"

It was Not I repeat NOT meant to foster hate and flames.
IT was not a commentary on ham radio today
It was not a code, no code debate
It was not a spectrum loss debate
and it was not a packet vs voice debate

I just wanted to know the policy , thats all.
It was also given without naming the party who did it --who chose to ID himself

And it wasnt a comment about that operators ability.

It was simply a question...
Without getting wordy, though, after hearing some of the comments about going against the rules etc, I'll comment:

Some of you have advocated going "against the rules"... This is a personal decision.
For my taste though, it'll be pretty hard to get me to discuss ANY names , let me say that again ANY NAMES, over packet, voice, or any other mode available...

BUT

Should there be an emergency, I can decide if the circumstances are appropriate to change my policy. I am not an inflexible automaton, and neither are any of you.. To routinely say "to hell" with enforcing the policy of saying , or typing names of shelter victims , etc over our freqs is just as silly as absolutely NOT giving names. Either extreme is probably wrong.

If someone hires you to do a job, but gives you rules, do you think that you should
not obey them ? What would you do to an employee who disregarded the rules when he felt it was ok , and made you liable for God knows how much $$??

In my (now) limited experience in law enforcement, I have found that it is usually the guy who tries to do someone a favor, ends up getting it in the rear end. Those of you who disagree are naive.. I work too hard what the little I have, to jeopardize it in a civil lawsuit. I suggest that those with similar feelings take note. Some of you will interpret this as being silly, and that's fine, but I think that everyone is a little more aware of the implications of sending a name over FM, which was the original purpose of the question.

Last thought -- some have commented about what could happen in divulging names (theft of property, etc) and I have appreciated and noted those comments. In closing, lets all relax one notch ok ?

Mike KD4EMI@JUNO.COM

_____
You don't need to buy Internet access to use free Internet e-mail.
Get completely free e-mail from Juno at http://www.juno.com
Or call Juno at (800) 654-JUNO [654-5866]

140. Re: CONCERNS

From: n8exf@juno.com (R L BOEHM)
Date: Mon, 6 Jul 1998 19:23:54 -0400
To: Busch_T@se.crane.navy.mil
Cc: aprssig@tapr.org
Message-ID: <19980706.192758.14630.0.N8EXF@juno.com>

Rendered body type: text/plain

Never, ever, talk to the PRESS! You will all of a sudden become a "source
within the Red Cross" weather you want to be one or not! and if you have
an HT at your side, you will then become a "highly placed source".
73 de Bob, N8EXF // KN
homepage   http://www.qsl.net/n8exf

Don't sweat the petty things, and don't pet the sweaty things

On Mon, 6 Jul 1998 12:48:26 -0500 (CDT) "Thomas_Busch"
<Busch_T@se.crane.navy.mil> writes:
>>From what I've learned about Red Cross procedures, their main concern
>
>about the shelter information is the security and privacy of the
>people housed there.
>
>I believe they are mostly worried about the press harrassing their
>charges. Also, be very careful when the press asks about specific
>families and incidents. For example, what would your answer be if
>the press asked you about someone who had a heart attack during an
>emergency? What if you passed information along that later proved to
>be incorrect? We are not a newsgathering organization.
>
>We have to consider the source of the request.
>
>Tom Busch, WB8WOR
>
>

_____
You don't need to buy Internet access to use free Internet e-mail.
Get completely free e-mail from Juno at http://www.juno.com
Or call Juno at (800) 654-JUNO [654-5866]

141. Re: [APRSSIG:25945] Re: CONCERNS

From: Jon Ogden <jono@enteract.com>
Date: Mon, 6 Jul 98 18:56:53 -0500
To: <n2zrc@webspan.net>, <aprssig@tapr.org>
Message-ID: <199807062349.SAA02648@tapr.org>
Rendered body type: text/plain

>   Think about it. Your family has been evacuated to a shelter due to
>threatening brush fires. Some creep with a scanner hears this. He now
>knows that your house is empty and unguarded.

This is a useless concern anyhow. The media reports all the areas that
have been evacuated. So the creeps know which houses are vacant as it
is. They don't need ham radio to tell them what they already know!

Additionally, evacuated areas usually have some sort of barricaded or
restricted access. While not stopping the creeps entirely, it certainly
must slow them down because one generally doesn't hear of homes being
robbed in times like this (although it probably does happen).

If someone wants to get a message to loved ones, then we should do what
the person wants. Period. End of story.

73,

Jon
KE9NA

Jon Ogden
KE9NA

http://www.qsl.net/ke9na

"A life lived in fear is a life half lived."

142. Re: [APRSSIG:25953] Re: CONCERNS

From: Jon Ogden <jono@enteract.com>
Date: Mon, 6 Jul 98 18:58:21 -0500
To: "Ray Vaughan" <rvaughan@gate.net>
Cc: <aprssig@tapr.org>
Message-ID: <199807062350.SAA02741@tapr.org>

Rendered body type: text/plain

>Sorry, I should have made it clearer... I meant the collective 'you' as in
>most hams. I was agreeing with you (Jon)! I meant to compare to what ham
>radio should be (what you said) and what it has become (bitching about the
>rules and other excuses). The sarcasm didn't come out right I guess.
>
>Sorry for the confusion.

No offense taken ray. I thought you were agreeing with me. I just
wasn't sure. So the sarcasm came across pretty good! :-)

For the rest of you: Ray says it right: STOP BITCHING!

73,

Jon
KE9NA

Jon Ogden
KE9NA

http://www.qsl.net/ke9na

"A life lived in fear is a life half lived."

143. HTX-404 Closeout

From: Chris Cannon <kb5yrz@bigfoot.com>
Date: Sun, 05 Jul 1998 23:39:33
To: aprssig@tapr.org, aprs-fl@tapr.org
Message-ID: <3.0.1.16.19980705233933.483fb448@cftnet.com>
Rendered body type: text/plain

I just popped into the local RatShack to see if they still had
any 2M amps (they did), and also found that the HTX-404 440
HTs are also being closed out. They've been reduced to
$70. Of course I scooped up their last one. (I'll have to wait
for the correct antenna, though)

So, now I've finally got a 440 HT, and have to ask:
Any APRS activity on 440 around Tampa, now that I've been orphaned
from 2M with the QSY? Demos, you want to field this one?

Chris
kb5yrz@bigfoot.com

144. Re: [APRSSIG:25884] (no subject)

From: Richard Amirault <amirault@tiac.net>
Date: Mon, 6 Jul 1998 20:02:32 -0400 (EDT)
To: JDWalkerJr@aol.com
Cc: aprssig@tapr.org
Message-ID: <Pine.BSF.3.96.980706200046.20745F-100000@shell2.tiac.net>
Rendered body type: text/plain

On Thu, 2 Jul 1998 JDWalkerJr@aol.com wrote:

> I went right out here in Macon, GA and bought the Radio Shack 30W 2 meter
> amplifier (19-1122) on closeout for $39.97 per Glenn Little's tip. The
> regular price was $99.00. Of course the power supply was an extra $100 but
> I'm still very happy with the deal. It gives me a nice boost on RS-12. I can
> hear the difference, and I think it's worth it. Thanks Glenn!

That's nice .... wait a minute ... you're using an amp designed for FM
(it has no FM/SSB switch) on RS-12? How'd you do that?

Richard Amirault   N1JDU   Boston, Massachusetts USA
amirault@tiac.net   "Go Fly A Kite"

145. Wiring info needed for Tiny-2/FT-470

From: Daniel Baker/K4DB <k4db1@ibm.net>
Date: Mon, 06 Jul 1998 21:40:14 -0400
To: aprssig@tapr.org
Message-ID: <3.0.5.32.19980706214014.007a8bc0@pop3.ibm.net>
Rendered body type: text/plain

I'm in the process of running down a problem with my APRS setup consisting
of a PacComm Tiny-2 TNC & a
Yaesu FT-470 HT. It's come to my attention that my transmitted audio level
is very low, possibly explaining
the problems I've been experiencing getting into the local digi. Looking @
the very informative manual for my
AEA PK-900 TNC, the connect diagram shows a .22mF cap & a 2.2 kohm resistor
in parallel in the audio line.
My harness doesn't have either of these & I suspect that is part of the
problem. Can anyone confirm this &
verify the correct values?

Tks & 73,

Daniel Baker/K4DB

146. More Rat Shack Closeouts

From: "Ray J. Vaughan" <rvaughan@gate.net>
Date: Mon, 06 Jul 1998 21:51:37 -0400
To: aprssig@tapr.org
Message-ID: <1.5.4.32.19980707015137.00ac1b2c@pop.gate.net>
Rendered body type: text/plain

While not directly related to APRS (yet), another item on sale right now is
the Probe Style O'Scope (22-310). Was $99.99 now 29.97. This got it down
to my 'toy' price range.

It has a tiny display on the side (.5" square) but also outputs to a PC via
a serial port to some nice dos/win/win95 software to show waveforms. It
also doubles as a simple DVM.

It's not going to replace your bench scope, but might be good to check audio
levels in and out of a tnc for example. When I get a PL circuit on the
bench, I'll see how well it can detect a PL.

Here's an idea... it outputs at 19.2 kps. Maybe buffer it and output a data
burst on APRS. Just think, not only will you see the PS voltage, you'll see
the ripple too!

Of course I'm kidding, but I'm sure some mind here could think of some data
that could be digitized by this thing and then sent to all via APRS.

Still looking to anyone that's managed to get highway traffic speed data on
the air. I see a BIG demand for this in any evacuation.

I also picked up the last (display) of the 2m amp. No box, no manual. But
they agreeded to mail a manual, n/c. If you get the last one, be sure they
do the same for you. Mine will go with me HTX-202 tracker. There's also a
digital SWR meter on sale. But the one they had left had no remote sensor.

I'm not happy about RS getting out of ham radio (remember when everyone
wanted to boycott them for having the nerve to sell a ham radio!) but as
long as they are, I guess we should take advantage of it.

Ray, KD4BBM

147. Digi Owner mailing list

From: Ralph Fowler <rwf@BSRG.org>
Date: Mon, 06 Jul 1998 21:29:44 -0400
To: aprssig@tapr.org
Message-ID: <199807070202.WAA29756@cocacola-bh.cokecce.com>
Rendered body type: text/plain

It has been a while since I sent this, and there may be new digi owners who
have not joined.

There's another, much less well known, APRS mailing list!
It is intended for use by APRS RF Digipeater Owners.
Purpose is for the discussion of issues relating to the operation and
infrastructure of the APRS RF digi network.

To subscribe, send a message to: majordomo@lounet.com
In the body of the message mention: subscribe digiowners

The list is private, but not moderated.

If I can't tell who you are from your Email address, you may be asked to
show evidence

of what and where your digi is. Being in Jeff Brenton's digis.pos file is
a very good start.
As a matter of fact- you must be listed there to get on the list.
He has a web page at: http://www.dididahdahdidit.com

If you are aware of other APRS user lists, please make sure this info gets
to them.

Enjoy

Ralph N4NEQ

148. Radio Shack Amplifier

From: JDWalkerJr@aol.com
Date: Mon, 6 Jul 1998 22:45:29 EDT
To: amirault@tiac.net
Cc: aprssig@tapr.org
Message-ID: <8382b4fd.35a18bca@aol.com>
Rendered body type: text/plain

In a message dated 7/6/98 8:04:54 PM Eastern Daylight Time, amirault@tiac.net
writes:

> you're using an amp designed for FM
> (it has no FM/SSB switch) on RS-12? How'd you do that?

Strange things happen to people who don't know any better. It didn't occur to
me that it would matter. Actually, it seems to work great on CW. That's
about all I do on RS-12 anyway. I've tried it on SSB, and it causes the
amplifier to make a rattling noise which I judged was not desirable. As I've
have thought about it, I'm realizing that the TR switch would be a problem. I
wonder if some simple mod could adapt it to SSB? Maybe hard wire a TR switch?
Any suggestions, warnings, etc. No jeering please.

Jimmy Walker
WA4ILO
Macon, GA

149. Re: Win CE version

From: "Louis Cobet" <louis_cobet@email.msn.com>
Date: Sun, 5 Jul 1998 23:21:21 -0700
To: <aprssig@tapr.org>
Message-ID: <000201bda953$d5175de0$421f2599@MSNLouisCobet>
Rendered body type: text/plain

What is the status of the Win CE version of APRS?

73,
Louis Cobet, K6MDH

louis_cobet@email.msn.com

150. Kantronics Announces....

From: Jim Duncan <ku0g@kcaprs.org>
Date: Mon, 06 Jul 1998 22:08:44 -0500
To: "aprssig@tapr.org" <aprssig@tapr.org>
Message-ID: <35A1913C.3F567F01@kcaprs.org>
Rendered body type: text/plain

I am passing along the following to the APRS SIG at the request of Phil
Anderson, W0XI, who is "on the road" these days.... Read on....

--
73 de Jim, KU0G
Chairman/Coordinator
Kansas City APRS Working Group, W0APR
Rogue Squadron Storm Chasers
Mailto:ku0g@kcaprs.org
Webpage: http://www.kcaprs.org
BorgNet: 1st of 10

>Phil Anderson wrote...

Please pass this info along to the APRS sig:

1. Kantronics to release 2.5 watt 144.390 Mhz transmitter kit, crystal
controlled and compatible with the KPC-3, KPC-3+, KPC-9612 and KPC-9612+
for tracking.....pcb is 3.5 inches by 4.97 inches and fits inside

anempty kpc-3+ case. Cost of the kit will be $ 69.95 plus $ 7.50
shipping handling.

2. Kantronics to release the 8.3 firmware for the KPC-3 Plus. This
includesthe following features:

        second serial port, configured as a firmware UART, via the
radio   DB-9 connector.....

        qualified setting of the TNC clock via fix strings from the
satellite...

        support for APRS "hot key" (control-E) operation

        allows tracker to be configured with GPS-HH into firmware UART
port so that the single terminal laptop can be used for packet
communicatings and/or APRS program operation

        detachment of the computer causes 8.3 KPC-3+ to revert to being
a standalone tracker...and more, see the website for details

Phil W0XI.

Phil Anderson W0XI
Kantronics
1202 E 23rd Street
Lawrence, KS 66046
website www.kantronics.com
e-mail pandersn@kantronics.com
785-842-7745
fax 785-842-2031.

151. Re: [APRSSIG:25988] Re: (no subject)

From: "O.C. Winton wn1z" <wn1z@sojourner.wn1z.ampr.org>
Date: Mon, 06 Jul 1998 20:24:53 -0700
To: aprssig@tapr.org
Message-ID: <6127@babylon.wn1z.ampr.org>
Rendered body type: text/plain

At 07:08 PM 7/6/98 -0500, you wrote:
>> I'm still very happy with the deal. It gives me a nice boost on RS-12.
I can
>> hear the difference, and I think it's worth it. Thanks Glenn!
>
>That's nice .... wait a minute ... you're using an amp designed for FM
>(it has no FM/SSB switch) on RS-12? How'd you do that?

Yep, i asked him the same question off the list but no answer.
RS-12 uplink on 15 meters, down on 10 or 2 -- USB!!

Orrin wn1z
in foggy Monterey CA

152. Re: [APRSSIG:25937] Re: CONCERNS

From: Bob Bruninga <bruninga@nadn.navy.mil>
Date: Mon, 6 Jul 1998 23:33:07 -0400 (EDT)
To: R L BOEHM <n8exf@juno.com>
Cc: aprssig@tapr.org
Message-ID: <Pine.SOL.3.96.980706232917.14994F-100000@arctic>
Rendered body type: text/plain

I once keyboarded out a list of all "survivors" in the early days of
packet. THis list definately DID not mention any "victims". It was only
a list of all of the people coming into the shelter that were OK. I have
always wondered if this was a screw-up on my part...
None of the red cross people said anything. In fact, they were
feeding me the lists of names...

But a definitive answer for all of us APRS folks would help...

153. Re: [APRSSIG:25992] Radio Shack Amplifier

From: n8exf@juno.com (R L BOEHM)
Date: Mon, 6 Jul 1998 23:37:39 -0400
To: JDWalkerJr@aol.com
Cc: aprssig@tapr.org
Message-ID: <19980706.233739.3454.0.N8EXF@juno.com>
Rendered body type: text/plain

>> you're using an amp designed for FM
>> (it has no FM/SSB switch) on RS-12? How'd you do that?
>

>wonder if some simple mod could adapt it to SSB? Maybe hard wire a TR
>switch?
>Any suggestions, warnings, etc. No jeering please.
>
>Jimmy Walker
>WA4ILO
>Macon, GA

Jimmy,
It has been about 17 years since I have been in the 2 way biz, but I bet
you will find that the little RS amp is CLASS C and SSB requires CLASS
AB. SSB needs a LINEAR amp while FM does not - I hope I got that right,
like I said, its been a LONG time since I messed with real radio.
In other words, you will sound very distorted on SSB to the point where
others will ask if you are talking into an AT&T tin can :)
IF you really want to use the RS amp, build a delay by adding a 10 mfd
cap across the relay coil. This will hold the relay for just a few
seconds longer than "normal", but then stand by for the "what are you
using" comments :)

73 de Bob, N8EXF // KN
homepage   http://www.qsl.net/n8exf

Don't sweat the petty things, and don't pet the sweaty things

_____
You don't need to buy Internet access to use free Internet e-mail.
Get completely free e-mail from Juno at http://www.juno.com
Or call Juno at (800) 654-JUNO [654-5866]

154. Re: [APRSSIG:25992] Radio Shack Amplifier

From: Dave Hockaday VROC #940 <wb4iuy@amsat.org>
Date: Mon, 6 Jul 1998 23:43:17 -0400 (EDT)
To: aprssig@tapr.org
Message-ID: <199807070343.XAA04460@earth.ipass.net>
Rendered body type: text/plain

>have thought about it, I'm realizing that the TR switch would be a problem. I
>wonder if some simple mod could adapt it to SSB? Maybe hard wire a TR switch?
>Any suggestions, warnings, etc. No jeering please.

I've not looked at the R/S amp, but many amps use an NPN (or FET) switch on
the "cold" side of the coil in the T/R relay. In most of these applications,
a small polarized electrolytic cap (about 1-2uf) can be connected from the
base (gate) to the collector (drain) to modify the T/R relay to quick
attack-slow decay. Increase the value of the cap to increase the decay time.
Connect the + lead of the cap to the collector (drain).

73
Dave WB4IUY

155. Re: [APRSSIG:25952] Re: 440 Freq?

From: Bob Bruninga <bruninga@nadn.navy.mil>
Date: Mon, 6 Jul 1998 23:56:42 -0400 (EDT)
To: Paul Toth <k2sec@gte.net>
Cc: aprssig@tapr.org
Message-ID: <Pine.SOL.3.96.980706235051.14994J-100000@arctic>
Rendered body type: text/plain

You will never be able to coordinate a single frequency in the "packet"
area, because they are all already in use everywhere. That is why I
recommend 445.925 (the lowest of the FM simplex channels). YES, I know
this violates the gentlemens agreement to keep packet off of the simplex
channels, but APRS (with the Mic-ENcoder as just a brief burst on a the
tail end of a VOICE conversation) is NOT just packet. APRS when
mixed with voice is more like "selective calling" but with position
thrown in...

Since no one coordinates the FM simplex channels, this has a good
posibility to become a gathering point for APRS *VOICE* operations on
UHF... I am not advocating anarchy in spectrum planning. Just offering
this as a suggestion if it can be made to work in your area... I keep my
dual band listeing on 445.925 FM simplex when I am mobile, in case any
other APRS users wanna chat...

On Mon, 6 Jul
1998, Paul Toth wrote:

> 441.050 is one of several frequencies that have been recommended for packet.
> 441.150 is another. The ARRL bandplan also notes a number of frequencies in
> the low 430 MHz range as well, particularly for higher speed packet.
>
> While the local Coordinating bodies may have a recommendation, this is one
> of those issues they are not well positioned to address. As Bob Bruninga
> noted a couple weeks ago, this is a NATIONAL WIRELESS NET. And it works
> best when everyone is on the SAME frequency. This is where the endorsement
> of a frequency by the ARRL could smooth the road to success for 440 APRS.
> If grouping the packet frequencies together is important, then something in
> the 441.00-441.250 may be in order. If not, how about 446.150?
>
> 73!
>
> Paul J. Toth
> K2SEC
>
>
> -----Original Message-----
> From: Roy Bost <rbost@itexas.net>
> To: aprssig@tapr.org <aprssig@tapr.org>
> Date: Thursday, July 02, 1998 9:25 PM
> Subject: [APRSSIG:25882] 440 Freq?
>
>
> >Once again I'm considering creating a 2m-440 gate. Does anyone have any
> >idea of what freq to use? Especially in Texas?! The only band plan I can
> >find is in the ARRL Repeater Dir. Does anyone have any problem with
> 441.050
> >mHz?
> >
> >Roy W Bost
> >N5TAM
> >rbost@itexas.net
> >
>
>

APRSdos REPLY/COMMENT:

Reply mail addr: wb4apr@amsat.org
US mail address: 115 old Farm Ct, Glen Burnie, MD 21060
See DAYTON97 HISTORY: http://web.usna.navy.mil/~bruninga/dayton.html
See Maryland APRS LIVE: http://web.usna.navy.mil/~bruninga/aprs.html
See GPS on ANY radio: http://www.tapr.org/tapr/html/mic-e.html

156. Digipeater coverage

From: Jeff Brenton <jeffb@espi.com>
Date: Mon, 06 Jul 1998 23:07:58 -0500
To: aprssig <aprssig@tapr.org>
Message-ID: <35A19F1E.19E6@espi.com>
Rendered body type: text/plain

I've re-done the digipeater coverage map, which complements the
DIGIS.POS and DIGIS.LOG files.

Some people have been thinking that the little boxes on the frequency
map are the "known digis", but they were only what was known back in
March, when I first generated the base map. The Coverage map is a plot
of the just-updated DIGIS file on a Continental USA map.

http://www.dididahdahdidit.com/images/coverage.gif The Map
http://www.dididahdahdidit.com/text/digis.pos   The APRS Overlay file
http://www.dididahdahdidit.com/text/digis.log   The Win/Mac version
--

Jeff Brenton, Ham Radio call KA9VNV
Questionable web page: http://www.dididahdahdidit.com
Selling some toys: http://www.espi.com/ForSale.html

157. Re: [APRSSIG:25962] compressed positions

From: Bob Bruninga <bruninga@nadn.navy.mil>
Date: Tue, 7 Jul 1998 00:08:06 -0400 (EDT)
To: Wes Johnston <kd4rdb@eagnet.com>

Cc: aprssig@tapr.org
Message-ID: <Pine.SOL.3.96.980707000637.14994L-100000@arctic>
Rendered body type: text/plain

On Mon, 6 Jul 1998, Wes Johnston wrote:

> As I understand it, all versions of aprs can decode the compressed mic-e
> packets. When are we going to get the ability to TX them from APRS,
> WINAPRS, APRSPLUS? It would ease the crowding in some areas (although dumb
> trackes are still S.O.L.). I had understood before that not all versions
> of aprs would read these packets and we were waiting for everyone to get
> upgraded.

I hope to begin transmitting in a few days with a BETA version of APRS. I
will not be releaseing this beta, but will be transmitting just so we will
all have a source for testing our receive capabilties... Ill post
someting when Im ready...

158. Re: [APRSSIG:25994] Kantronics Announces....

From: "Ray J. Vaughan" <rvaughan@gate.net>
Date: Tue, 07 Jul 1998 00:11:28 -0400
To: ku0g@kcaprs.org
Cc: aprssig@tapr.org
Message-ID: <1.5.4.32.19980707041128.00ada99c@pop.gate.net>
Rendered body type: text/plain

A round of thanks to Kantronics for supporting ham radio, and specifically APRS.

Second serial port? Can't wait!

Ray, KD4BBM

At 10:13 PM 7/6/98 -0500, you wrote:
>I am passing along the following to the APRS SIG at the request of Phil
>Anderson, W0XI, who is "on the road" these days.... Read on....
>
>--
>73 de Jim, KU0G
>Chairman/Coordinator
>Kansas City APRS Working Group, W0APR
>Rogue Squadron Storm Chasers
>Mailto:ku0g@kcaprs.org
>Webpage: http://www.kcaprs.org
>BorgNet: 1st of 10
>
>>Phil Anderson wrote...
>
>Please pass this info along to the APRS sig:
>
>1. Kantronics to release 2.5 watt 144.390 Mhz transmitter kit, crystal
>controlled and compatible with the KPC-3, KPC-3+, KPC-9612 and KPC-9612+
>for tracking.....pcb is 3.5 inches by 4.97 inches and fits inside
>anempty kpc-3+ case. Cost of the kit will be $ 69.95 plus $ 7.50
>shipping handling.
>
>2. Kantronics to release the 8.3 firmware for the KPC-3 Plus. This
>includesthe following features:
>
>   second serial port, configured as a firmware UART, via the
>radio DB-9 connector.....
>
>   qualified setting of the TNC clock via fix strings from the
>satellite...
>
>   support for APRS "hot key" (control-E) operation
>
>   allows tracker to be configured with GPS-HH into firmware UART
>port so that the single terminal laptop can be used for packet
>communicatings and/or APRS program operation
>
>   detachment of the computer causes 8.3 KPC-3+ to revert to being
>a standalone tracker...and more, see the website for details
>
>Phil W0XI.
>
>Phil Anderson W0XI
>Kantronics
>1202 E 23rd Street
>Lawrence, KS 66046
>website www.kantronics.com

>e-mail pandersn@kantronics.com
>785-842-7745
>fax 785-842-2031.
>
>

159. RS 30W PA

From: assib@imap1.asu.edu
Date: Mon, 06 Jul 1998 21:27:07 -0700 (MST)
To: aprssig@tapr.org
Message-ID: <Pine.GSO.3.96.980706212537.12689A-100000@email1.asu.edu>
Rendered body type: text/plain

Hi,
Since it was mentioned here,
did anyone try to obtain the schematics for the discontinued PA from RS ?
bye, Assi

     Assi Friedman, 4X1KX/KK7KX Arizona State University
                  "The Truth Is Out There"
Tel: 602-844-1458 (home)
Tel: 602-965-2474 (ASUsat lab)
Fax: 602-965-0277 (ASUsat lab)
Email: assib@asu.edu
Home Page: http://www.public.asu.edu/~assib
ASUSat Page: http://www.eas.asu.edu/~nasasg/asusat/asusat.html
---

160. Re: [APRSSIG:25987] HTX-404 Closeout

From: Jon Ogden <jono@enteract.com>
Date: Mon, 6 Jul 98 23:54:54 -0500
To: <kb5yrz@bigfoot.com>, <aprssig@tapr.org>
Message-ID: <199807070447.XAA22169@tapr.org>
Rendered body type: text/plain

>I just popped into the local RatShack to see if they still had
>any 2M amps (they did), and also found that the HTX-404 440
>HTs are also being closed out. They've been reduced to
>$70. Of course I scooped up their last one. (I'll have to wait
>for the correct antenna, though)

Wow! The HTX-404s have been scarce around here in Chicago for at least a
year! I am even having to search for another 2m amp. Think I found a
store that has some though.

73,

Jon
KE9NA

Jon Ogden
KE9NA

http://www.qsl.net/ke9na

"A life lived in fear is a life half lived."

161. Re: [APRSSIG:25990] More Rat Shack Closeouts

From: Jon Ogden <jono@enteract.com>
Date: Mon, 6 Jul 98 23:57:08 -0500
To: <rvaughan@gate.net>, <aprssig@tapr.org>
Message-ID: <199807070449.XAA22302@tapr.org>
Rendered body type: text/plain

>I'm not happy about RS getting out of ham radio (remember when everyone
>wanted to boycott them for having the nerve to sell a ham radio!) but as
>long as they are, I guess we should take advantage of it.

When I asked the manager at the RS near my office if they were completely
getting out of ham radio, his reply was, "Well, they certainly aren't
expanding that product line any." Doesn't look to good. Kinda sad
actually. They've had some neat stuff over the years.

73,

Jon
KE9NA

Jon Ogden
KE9NA

http://www.qsl.net/ke9na

"A life lived in fear is a life half lived."

162. Re: [APRSSIG:25992] Radio Shack Amplifier

From: Jon Ogden <jono@enteract.com>
Date: Mon, 6 Jul 98 23:59:31 -0500
To: <JDWalkerJr@aol.com>, <aprssig@tapr.org>
Message-ID: <199807070452.XAA22419@tapr.org>
Rendered body type: text/plain

>Strange things happen to people who don't know any better. It didn't
>occur to
>me that it would matter. Actually, it seems to work great on CW. That's
>about all I do on RS-12 anyway.

It's off topic, but what the heck. CW will work on a class C amplifier.
SSB won't. Bad things happen.

 > I've tried it on SSB, and it causes the
>amplifier to make a rattling noise which I judged was not desirable. As I've
>have thought about it, I'm realizing that the TR switch would be a
>problem. I
>wonder if some simple mod could adapt it to SSB? Maybe hard wire a TR
>switch?
>Any suggestions, warnings, etc. No jeering please.

No, no, no, no! A class C amplifier is not linear enough for SSB
operation. It will not work. Class C amps need a constant envelope form
of modulation. FM provides this as does CW. SSB is NOT constant
envelope. Please, do not attempt to use it on SSB. You'll cause great
havoc with all the intermod you create.

73,

Jon
KE9NA

Jon Ogden
KE9NA

http://www.qsl.net/ke9na

"A life lived in fear is a life half lived."

163. Weather Node

From: "Gary Laurance" <n7nat@fnord.nwinfo.net>
Date: Mon, 6 Jul 1998 21:57:33 +0000
To: aprssig@tapr.org
Message-ID: <199807070457.VAA02765@fnord.nwinfo.net>
Rendered body type: text/plain

I am looking to set up a weather node in central washington and would
like info from the other weather staions on line as to what equipment
they are running, pro's and con concerning all. Would also like to put
this in a remote site which I already have picked out, but wondering
if the weather system can connect directly to the KPC-3 Plus or do you
have to have a computer to use it. All information that you can supply
me with would be very greatful.

Gary / N7NAT / Yakima, WA

164. Re: [APRSSIG:25999] Re: 440 Freq?

From: Jim Duncan <ku0g@kcaprs.org>
Date: Tue, 07 Jul 1998 00:15:50 -0500

To: bruninga@nadn.navy.mil, "aprssig@tapr.org" <aprssig@tapr.org>
Message-ID: <35A1AF06.107A83DD@kcaprs.org>
Rendered body type: text/plain

Bob Bruninga wrote:
>
> You will never be able to coordinate a single frequency in the "packet"
> area, because they are all already in use everywhere. That is why I
> recommend 445.925 (the lowest of the FM simplex channels).

<remainder of His Most Excellent Guru's commentary judiciously and
carefully removed to preserve His concepts)

445.925 MHz is already coordinated in Kansas and is verbally agreed to
in Missouri. I can not speak for the rest of the Midwest but we pushed
for this allocation three years ago. It is now being used in St. Louis
(I've just become aware of this in the past month) and will soon be
employed in Kansas City as a high-speed backbone network between
digis...

--
73 de Jim, KU0G
Chairman/Coordinator
Kansas City APRS Working Group, W0APR
Rogue Squadron Storm Chasers
Mailto:ku0g@kcaprs.org
Webpage: http://www.kcaprs.org
BorgNet: 1st of 10

165. Web page facelift

From: Jeff Brenton <jeffb@espi.com>
Date: Tue, 07 Jul 1998 00:22:11 -0500
To: aprssig <aprssig@tapr.org>
Message-ID: <35A1B083.483@espi.com>
Rendered body type: text/plain

Some people complained that it was too dark, and that "all those dots on
the background" made it hard to read the main page.... So, I'm doing
something a little lighter with the Questionable web page.

All the links are the same, I added a miniature of the APRS Frequency
Map (with link to the real thing), and tweaked the DOS APRS
documentation page a bit, too.

If anyone complains about readability, I'll change the background to
this really funky thing I saw on the "Home Power Magazine" CD... then
you'll have to click blindly, hoping to find a link! B-)

--

Jeff Brenton, Ham Radio call KA9VNV
Questionable web page: http://www.dididahdahdidit.com

166. Re: [APRSSIG:25999] Re: 440 Freq?

From: Cap Pennell <cap@cruzio.com>
Date: Mon, 06 Jul 1998 22:19:49 -0700
To: bruninga@nadn.navy.mil, aprssig@tapr.org
Message-ID: <3.0.5.32.19980706221949.0086e830@mail.cruzio.com>
Rendered body type: text/plain

At 11:03 PM 7/6/98 -0500, Bob Bruninga wrote:
<snip>
>I keep my
>dual band listeing on 445.925 FM simplex when I am mobile, in case any
>other APRS users wanna chat...

If you come out West to Monterey Bay, stick a PL of 123.0 on that thing and we'll hear you on our K6BJ
repeater in Santa Cruz. If you want to hear the repeater output too, 440.925. ;-) Not a problem.
73, Cap KE6AFE
--
Cap Pennell
Santa Cruz, CA 95062-1002   3658.93N/12200.91W [CM86xx]
email: cap@cruzio.com   home page: http://members.cruzio.com/~cap
packet radio: KE6AFE @ki6eh.#wcca.ca.usa.noam

167. Low-power equipment

From: "Paul Christenson" <n3eop@hotmail.com>
Date: Mon, 06 Jul 1998 22:28:03 PDT
To: aprssig@tapr.org

Message-ID: <19980707052804.24067.qmail@hotmail.com>
Rendered body type: text/plain

I'm doing some "hand waving" calculations on setting up a solar powered RELAY digi. I need ideas on equipment, particularly 2m rigs that have low RX current drain.

If anyone has set up a solar digi, I'd really like to hear from you.

Location: Silicon Valley, CA.

Thanks,
Paul N3EOP/6

_____
Get Your Private, Free Email at http://www.hotmail.com

168. Re: [APRSSIG:26007] Weather Node

From: Jeff Brenton <jeffb@espi.com>
Date: Tue, 07 Jul 1998 00:39:20 -0500
To: n7nat@fnord.nwinfo.net
Cc: aprssig <aprssig@tapr.org>
Message-ID: <35A1B488.55A2@espi.com>
Rendered body type: text/plain

Without a computer on-site, you're limited to the Peet Brothers line of weather stations (http://www.peetbros.com/), since none of the others outputs weather information in a form that can be sent by a TNC alone.

With a DOS APRS machine, you're limited to Peet and the Davis line (http://www.davisnet.com/), to which you'll have to add the computer interface (data logger).

If you put a Windows 95 computer on-site, you have a much larger variety of weather stations, from the inexpensive Radio Shack unit ($300 for "everything") up to the formerly-Heath 5001 weather station (don't remember where I put my link to the current manufacturer). Basically, if it has a computer interface and is half-way affordable, the Sprouls have built code to talk to it...

Pros/cons:

Peet units are well supported, but there have been a lot of people who have NEEDED that support. We've got a Ultimeter 2000 that's going to have to go back because it has stopped talking to the wind unit, and has NEVER talked properly to the electronic rain gauge. Others say they give great service. Can be used in "packet mode" or continuous output mode with a KPC-3 or other "GPS-capable" TNC, without a computer.

Davis units are a bit more expensive, particularly since you have to have to purchase the computer interface separately... but, it can also be used to log historical WX info. It can NOT be used stand-alone, though.

Heath put together a heck of a WX station, but it isn't cheap. Accurate, yes; inexpensive or cheap, no. $1300 last time I checked... but the display shows EVERYTHING at once, except highs/lows, unlike the above units. The non-kit units include the serial port, but, like the Davis, it can't be used stand-alone, and DOS APRS doesn't support it (Win/MacAPRS does).

Radio Shack's unit is popular, but its field history is still not very long. It's a private label version of someone else's unit, as is usual for most R/S products. Again, you must use Win/MacAPRS to put one of these on the air.

Not familiar with the others....
--

Jeff Brenton, Ham Radio call KA9VNV
Questionable web page: http://www.dididahdahdidit.com

Gary Laurance wrote:
> I am looking to set up a weather node in central washington and would
> like info from the other weather staions on line as to what equipment
> they are running, pro's and con concerning all. Would also like to put
> this in a remote site which I already have picked out, but wondering
> if the weather system can connect directly to the KPC-3 Plus or do you
> have to have a computer to use it. All information that you can supply
> me with would be very greatful.

169. New Weekly "Voice" APRS Net in Northern California

From: "Kurt A.F. Kiesow III" <kurt@ntgi.com>
Date: Mon, 06 Jul 1998 22:42:47 -0700
To: California APRS List <aprs@lists.monterey.edu>,
National APRS List <aprssig@tapr.org>
Cc: Cap Pennell <cap@cruzio.com>, Lance Ginner <lance@ginner.com>
Message-ID: <35A1B557.77293633@ntgi.com>
Rendered body type: text/plain

My apologies in advance to the folks outside of Northern and Central California for the use of your bandwidth, although that is one of the reasons that we are starting this Net... (there's not a single place to post this info, (not that there ever will be... ;-)))

Starting this coming Wednesday, July 8th, at 7:30 P.M. there will be a Net for APRS users, want-to-be users (as opposed to "wannabe"), and anyone else interested in general discussion about APRS.

The Net will meet on WB6OQS, a high level repeater located right next to the WR6ABD digi on Loma Prieta Peak in Santa Clara County, CA. (146.760 PL 151.4). This repeater has a large footprint and can be heard in the Central Sacramento Valley, the San Juaquin Valley, most of the San Francisco Bay Area, San Jose / Santa Clara Valley, Monterey and Santa Cruz.

There is currently no active "APRS users group" in this area although there is a substantial "group of APRS users". Hopefully this Net will provide a catalyst for the formation of such a group...

We hope that this Net will gain enough popularity to augment the constructive discussions that come out of these list servers ;-)

If you have any questions or comments please send them to kurt@ntgi.com. Thanks again for the use of your bandwidth. I'll look forward to speaking with you on Wednesday.

Kurt Kiesow
KF6QNC

P.S. A special thanks to the Santa Clara Valley Repeater Society for making WB6OQS available for this net. Without a high level machine we couldn't get broad enough coverage for this net to make sense.

170. 440 APRS Frequency

From: David McCarthy <david.kc7ayx@mci2000.com>
Date: Mon, 06 Jul 1998 18:10:04 -0700
To: aprssig@tapr.org
Message-ID: <35A1756C.C525E708@mci2000.com>
Rendered body type: text/plain

We have been using 445.925 simplex for APRS. currently it has only been used on a temporary trial basis, but we plan to put up permanent digis by fall.

David
Motorola ARC of Arizona
--
David C. McCarthy - KC7AYX - Vice Chair, Disaster Services
American Red Cross - Central Arizona Chapter
ARES EC - Skywarn - APRS - Motorola ARC of Arizona
mailto:david.kc7ayx@mci2000.com - SkyPager: 1-888-260-8153
http://www.angelfire.com/az/kc7ayx/index.html

171. Re: [APRSSIG:26006] Re: Radio Shack Amplifier

From: Dave Hockaday VROC #940 <wb4iuy@amsat.org>
Date: Tue, 7 Jul 1998 05:20:35 -0400 (EDT)
To: aprssig@tapr.org
Message-ID: <199807070920.FAA22533@earth.ipass.net>
Rendered body type: text/plain

>>amplifier to make a rattling noise which I judged was not desirable. As I've
>>have thought about it, I'm realizing that the TR switch would be a
>>problem. I
>>wonder if some simple mod could adapt it to SSB? Maybe hard wire a TR
>>switch?

>No, no, no, no! A class C amplifier is not linear enough for SSB
>operation. It will not work. Class C amps need a constant envelope form

>of modulation. FM provides this as does CW. SSB is NOT constant
>envelope. Please, do not attempt to use it on SSB. You'll cause great
>havoc with all the intermod you create.

Yep, this is true, if the amp is class C. The T/R circuit delay mod will
quiet it down a bit while working CW, though.

Dave WB4IUY

172. Re: [APRSSIG:25996] Re: CONCERNS

From: "John B. Leonard, Jr" <jleonard@tbcnet.com>
Date: Tue, 07 Jul 1998 06:39:12 -0500
To: bruninga@nadn.navy.mil
Cc: aprssig@tapr.org
Message-ID: <3.0.5.32.19980707063912.00974850@tbcnet.com>
Rendered body type: text/plain

Bob, this may help answer your question. It's from the Red Cross
regulation concerning Mass Care/Shelters. It pretty much defines the
problem and the responsibility of the RC people in charge of this stuff:

The "3000 Series" is the ARC's last word on Disaster Services , and the
3031 covers the shelter area.

There's been some discussion along this thread of "getting around" or
"ignoring" the rules because they're perceived to be wrong. That's not why
ARRL and ARC signed a Memo of Understanding. They agreed to cooperate
within each other's policies and procedures. But then again this is only
within the RC's circle of influence. Other H&W avenues (NTS, etc.) may not
have these limitations.

jbl

>FYI-
>ARC 3031 "Mass Care-Preparedness and Operations", Pg. 10, "Assisting
Disaster Welfare Inquiry", para. 4:
>   "The shelter manager must be aware of the importance of confidentiality
in gathering and maintaining information about shelter occupants. Such
information should be used only within the Red Cross. Specific requests
for related information from the media and other agencies should be
referred to administrative staff."
>
>The reason behind all of this confidentiality is that the US Congress gave
the RC a mandate way back in the early 1900's to alleviate suffering due to
disaster-related causes. By ensuring confidentiality, it sends everyone a
message that no one having reason to use RC services will have his/her
identity released to the public.
>
>What does this have to do with ham radio/APRS? Because ham radio, by its
very nature, can be monitored, even packet. Hence the confict between
NTS/Health and Welfare messages that ham radio does so well, and the
Disaster Welfare Inquiry that is the RC way of passing disaster-related
traffic.
>
>The bottom line is that the RC wants confidentiality maintained. Ham
radio can't guarantee that.
>
>jbl
>
>At 10:38 PM 7/6/98 -0500, you wrote:
>I once keyboarded out a list of all "survivors" in the early days of
>packet. THis list definately DID not mention any "victims". It was only
>a list of all of the people coming into the shelter that were OK. I have
>always wondered if this was a screw-up on my part...
>None of the red cross people said anything. In fact, they were
>feeding me the lists of names...
>
>But a definitive answer for all of us APRS folks would help...
>
>

J Barry Leonard/W9JBL
DeKalb IL E-MAIL mailto:jleonard@tbcnet.com
WWW Home Page http://tbcnet.com/~jleonard/home.html
American Red Cross Disaster Services -Rockford IL Chapter

173. Re: CONCERNS

From: jack swift <jswift@up.net>
Date: Tue, 07 Jul 1998 07:55:02 -0500
To: aprssig@tapr.org
Message-ID: <3.0.3.16.19980707075502.473f364a@mail.up.net>
Rendered body type: text/plain

the key phrase here is "they were feeding me the lists of names".

these guys are the 'served agency' and all we do is handle __their__
message traffic.

our local ares members are told:
1. do not violate FCC rules or do anything that risks your health.
2. only transmit messages given you by the 'served agency'.
3. transmit messages exactly.

that way we don't have to be 'experts' on the rules of ARC, the Salvation
Army, Search & Rescue, Law Enforcement, Emergency Management, Medical
Services, and the rest of the agencies we serve - we just have to know FCC
rules and how to operate our equipment.

if we work with a particular group often enough, we become familiar with
their rules and can call attention to an unusual message but it's still
__their__ decision on the message content.

At 10:40 PM EST 7/6/98 -0500, you wrote:
>I once keyboarded out a list of all "survivors" in the early days of
>packet. THis list definately DID not mention any "victims". It was only
>a list of all of the people coming into the shelter that were OK. I have
>always wondered if this was a screw-up on my part...
>None of the red cross people said anything. In fact, they were
>feeding me the lists of names...
>
>But a definitive answer for all of us APRS folks would help...
>
>
>
>

Jack Swift   jswift@up.net   N8WAV@W8YY.#UPMI.MI.USA.NA   47.119N 88.572W
Swift True Value Hardware   402 Shelden Ave. Houghton, MI 49931
906-482-0530, 0531, 7766   Alpha Phi Omega Epsilon Lambda Chapter Advisor
Houghton County Amateur Radio Emergency Service   Dereliction IS!
^^

174. Re: [APRSSIG:25952] Re: 440 Freq?

From: "Paul Toth" <k2sec@gte.net>
Date: Tue, 7 Jul 1998 08:19:26 -0400
To: "Bob Bruninga" <bruninga@nadn.navy.mil>, <aprssig@tapr.org>
Message-ID: <01bda9a1$7b991260$7dc02599@win95-adm>
Rendered body type: text/plain

Bob...

445.925 MHz won't work. I know of several voice repeaters on the
frequency...including one in my old backyard of Central NJ.

Maybe this issue is one where some type of national discussion and consensus
is needed...where the ARRL or some other organization can take the lead. We
all thought there would be a massive uproar when the move to 144.390 was
undertaken earlier this year. From my vantage point, things have gone
fairly smoothly.

The alternative is no higher speed APRS on 440 or moving 9600 baud or faster
service to some other band (maybe 220 or 23cm).

73!

Paul J. Toth
K2SEC
-----Original Message-----
From: Bob Bruninga <bruninga@nadn.navy.mil>
To: Paul Toth <k2sec@gte.net>
Cc: aprssig@tapr.org <aprssig@tapr.org>
Date: Monday, July 06, 1998 11:56 PM
Subject: Re: [APRSSIG:25952] Re: 440 Freq?

>You will never be able to coordinate a single frequency in the "packet"

>area, because they are all already in use everywhere. That is why I
>recommend 445.925 (the lowest of the FM simplex channels). YES, I know
>this violates the gentlemens agreement to keep packet off of the simplex
>channels, but APRS (with the Mic-ENcoder as just a brief burst on a the
>tail end of a VOICE conversation) is NOT just packet. APRS when
>mixed with voice is more like "selective calling" but with position
>thrown in...
>
>Since no one coordinates the FM simplex channels, this has a good
>posibility to become a gathering point for APRS *VOICE* operations on
>UHF... I am not advocating anarchy in spectrum planning. Just offering
>this as a suggestion if it can be made to work in your area... I keep my
>dual band listeing on 445.925 FM simplex when I am mobile, in case any
>other APRS users wanna chat...
>
>
> On Mon, 6 Jul
>1998, Paul Toth wrote:
>
>> 441.050 is one of several frequencies that have been recommended for
packet.
>> 441.150 is another. The ARRL bandplan also notes a number of frequencies
in
>> the low 430 MHz range as well, particularly for higher speed packet.
>>
>> While the local Coordinating bodies may have a recommendation, this is
one
>> of those issues they are not well positioned to address. As Bob Bruninga
>> noted a couple weeks ago, this is a NATIONAL WIRELESS NET. And it works
>> best when everyone is on the SAME frequency. This is where the
endorsement
>> of a frequency by the ARRL could smooth the road to success for 440 APRS.
>> If grouping the packet frequencies together is important, then something
in
>> the 441.00-441.250 may be in order. If not, how about 446.150?
>>
>> 73!
>>
>> Paul J. Toth
>> K2SEC
>>
>>
>> -----Original Message-----
>> From: Roy Bost <rbost@itexas.net>
>> To: aprssig@tapr.org <aprssig@tapr.org>
>> Date: Thursday, July 02, 1998 9:25 PM
>> Subject: [APRSSIG:25882] 440 Freq?
>>
>>
>> >Once again I'm considering creating a 2m-440 gate. Does anyone have any
>> >idea of what freq to use? Especially in Texas?! The only band plan I
can
>> >find is in the ARRL Repeater Dir. Does anyone have any problem with
>> 441.050
>> >mHz?
>> >
>> >Roy W Bost
>> >N5TAM
>> >rbost@itexas.net
>> >
>>
>>
>
>APRSdos REPLY/COMMENT:
>
>Reply mail addr: wb4apr@amsat.org
>US mail address: 115 old Farm Ct, Glen Burnie, MD 21060
>See DAYTON97 HISTORY: http://web.usna.navy.mil/~bruninga/dayton.html
>See Maryland APRS LIVE: http://web.usna.navy.mil/~bruninga/aprs.html
>See GPS on ANY radio: http://www.tapr.org/tapr/html/mic-e.html
>

175. Re: 440 Freq?

From: Joseph Dees <michael.dees@ferc.fed.us>
Date: Tue, 07 Jul 1998 08:32:38 -0400
To: aprssig@tapr.org
Message-ID: <s5a1dd3d.029@ferc.fed.us>
Rendered body type: text/plain

There are a large number of ATV repeaters around the country which operate with an input or output bandpass of 438 to 444 MHZ. A 441 MHZ packet network in the vicinity of these repeaters would cause severe interference and would make the ATV machines unusable. It would make a lot of ATV people very unhappy. Frequencies in the 446 range would be a better choice.
Mike Dees N3EZD

-----Original Message-----
From: Roy Bost <rbost@itexas.net>
To: aprssig@tapr.org <aprssig@tapr.org>
Date: Thursday, July 02, 1998 9:25 PM
Subject: [APRSSIG:25882] 440 Freq?

>Once again I'm considering creating a 2m-440 gate. Does anyone have any
>idea of what freq to use? Especially in Texas?! The only band plan I can
>find is in the ARRL Repeater Dir. Does anyone have any problem with 441.050
>mHz?
>
>Roy W Bost
>N5TAM
>rbost@itexas.net
>

176. RE: [APRSSIG:26018] Re: 440 Freq?

From: "Demos Doulou" <ddoulou@gte.net>
Date: Tue, 7 Jul 1998 09:45:27 -0400
To: <k2sec@gte.net>, <aprssig@tapr.org>
Message-ID: <001901bda9ad$7fd5db40$05f3ffd0@wingate>
Rendered body type: text/plain

I do not think we need a high speed nation wide frequency. We almost have a low speed one now with 144.390 and for the intended purpose of tracking mobiles it will do just fine. What needs to be done is all other uses of the frequency need to be moved off of it (i.e.. weather stations, keyboarding and so). Preferable to a high speed local frequency that was linked to all other areas via the internet (with ongoing work to make a parallel link via RF).

Think about it. With 39 and other local frequencies being dumped into the inet and with a local inet to rf channel, you could be tracked anywhere in the country and also see and keyboard to anyone else in the country (world actually) in real time from your car, boat, camp site, disaster site, wherever.

Of course this is only my opinion for what its worth.

73

Demos Doulou KR4US
Pinellas Cty, Florida
 ACS Radio Officer
kr4us@amsat.org
ddoulou@gte.net

> -----Original Message-----
> The alternative is no higher speed APRS on 440 or moving 9600
> baud or faster
> service to some other band (maybe 220 or 23cm).
>

177. aprs digi software

From: Wes Johnston <kd4rdb@eagnet.com>
Date: Tue, 07 Jul 1998 10:16:38 -0400
To: aprssig@tapr.org
Message-ID: <3.0.32.19980707101636.006d64f0@gena>
Rendered body type: text/plain

I'm in the process of writing aprs digi software. Will run in KISS mode. Will do wide-n, trace, MIC-E routing, and all the other goodies. Want to ask the group what their opinion of compressing the packets of dumb trackers on the fly. Let consider that a dumb tracker sends out a RMC string which is over 70 characters long. When the node hears this, it

converts that RMC sentence to a MIC-E packet, then digipeats it as 30bytes
(or so). It might save some bandwidth in the more crowded areas.

Pro's? Cons? let me know.
Wes
Email: mailto:kd4rdb@usa.net
APRS: http://www.qsl.net/kd4rdb/aprs.htm
A good traveler has no fixed plans and is not intent on arriving.

178. Re: CONCERNS

From: wo4u@juno.com
Date: Tue, 7 Jul 1998 10:23:22 -0400
To: bruninga@nadn.navy.mil, aprssig@tapr.org
Message-ID: <19980707.103728.3630.12.wo4u@juno.com>
Rendered body type: text/plain

On Mon, 6 Jul 1998 22:38:48 -0500 (CDT) Bob Bruninga
<bruninga@nadn.navy.mil> writes:
>I once keyboarded out a list of all "survivors" in the early days of
>packet. THis list definately DID not mention any "victims". It was
>only
>a list of all of the people coming into the shelter that were OK. I
>have
>always wondered if this was a screw-up on my part...
>None of the red cross people said anything. In fact, they were
>feeding me the lists of names...
>
>But a definitive answer for all of us APRS folks would help...
>
I believe I have been through every Red Cross training course that has
been offered. Most of the Instructors have had considerable Disaster
Experience and know when it is necessary to deviate from the "Procedure
Manual". Although my prior message addressed this same question, I will
try to re-phrase it this time. My reply is based on considerable
training and actual experience.

If all the normal communication systems that the Red Cross uses are
working (including land lines and cell phones) then they will use those
for passing names. If the disaster results in those services being
unavailable then the Red Cross needs us. We are working under the
direction of the Shelter Manager. If the Shelter Manager gives us a
message to relay to another location - and it includes names - then
relay the information. If we can use a form of Packet to do the job so
much the better. Using packet will greatly reduce the number of people
"without a need to know" from listening on their scanners. I know anyone
can go out and buy a radio and TNC and hook it up to their computer and
"listen" - but not many do that compared to the millions of scanners that
exist. Using APRS on Alternate frequencies with portable digis reduces
the chances of the "snoops" from obtaining confidential information even
more. Our local RC Officials LOVE APRS.

In summary, the "Manual" says DON'T but "Reality" says sometimes it is
the only way. I am not saying that we as HAMS make the decision all the
time either - most of the time there will be a Red Cross Official that
makes the decision. However, if we are going to be working in Disaster
situations then we better be prepared to make decisions. We may not
always have someone there to tell us what to do.

Like I said in my earlier response to this same basic question .... No
one has ever lost their license, been fined, or gone to jail for
communicating such information. We should not be running from things
that are not chasing us. As a member of the National DAT, I've been
there and done that and am proud of it. To the person that accused me of
"breaking the law" on a post that I read yesterday ... all I can say is
once you have had the experience you will probably be eating your words.

Paul - WO4U

_____
You don't need to buy Internet access to use free Internet e-mail.
Get completely free e-mail from Juno at http://www.juno.com
Or call Juno at (800) 654-JUNO [654-5866]

179. Re: [APRSSIG:26020] Re: 440 Freq?

From: Jon Ogden <jono@enteract.com>
Date: Tue, 7 Jul 98 09:43:53 -0500
To: <ddoulou@gte.net>, <aprssig@tapr.org>
Message-ID: <199807071441.JAA02520@tapr.org>

Rendered body type: text/plain

> We almost have a
>low speed one now with 144.390 and for the intended purpose of tracking
>mobiles it will do just fine. What needs to be done is all other uses of
>the frequency need to be moved off of it

Huh? ...I disagree.

Why must we always insist that everything be moved off our main
frequency? APRS typically does not need the high data rates of other
forms of packet. There just isn't that much information being
transmitted. Maybe some telemetry stuff such as EMWIN or whatever, need
the higher data rates, but certainly not guys sending one or two sentence
messages at keyboards, trackers, temperatures and wind data, etc.

There is plenty of dead air on 144.39 (at least in Chicago). If it was
"constantly" busy then I'd agree with you. But it isn't. Why complicate
things and confuse users as to what they need to use and what equipment
they need to buy. Keep it simple. That's the beauty of APRS.

Higher speeds are sexy. But they aren't necessary. 1200 baud is still
used for a lot of stuff: credit card verification, etc. It's perfect for
applications where there is not a tremendous amount of data. APRS is one
of those.

73,

Jon
KE9NA

Jon Ogden

jono@enteract.com
www.qsl.net/ke9na

"A life lived in fear is a life half lived."

180. Re: [APRSSIG:26022] Re: CONCERNS

From: assib@imap1.asu.edu
Date: Tue, 07 Jul 1998 08:13:06 -0700 (MST)
To: wo4u@juno.com
Cc: aprssig@tapr.org
Message-ID: <Pine.GSO.3.96.980707075904.2037C-100000@email1.asu.edu>
Rendered body type: text/plain

Hi,
Please do not forget that the Red-Cross does not decide what is proper
info to be transmitted, and what is not ! (with all due respect to ARC - I am
a volunteer too). The type of communications we are allowed in emergency is
regulated in part 97.401 and 97.403.
If a Red-Cross official has a problem that names be said on Ham-Radio
frequencies then my guess is that the message is probably not important
enough, in which case, should not be transmitted anyway.
But if it is an emergency, then there should not be any problems sending any
type of message. I am sure that a family that got seperated would not care
having their names sent on the air if its for tracing purposes.
I think that the important thing to remember is that the Ham-Radio operator
operating the comm equipment is the party responsible for what is sent, not
any ARC official. So the final call is always yours.
bye, Assi

On Tue, 7 Jul 1998 wo4u@juno.com wrote:

> direction of the Shelter Manager. If the Shelter Manager gives us a
> message to relay to another location - and it includes names - then
> relay the information. If we can use a form of Packet to do the job so

snip

> makes the decision. However, if we are going to be working in Disaster
> situations then we better be prepared to make decisions. We may not
> always have someone there to tell us what to do.

snip

> Like I said in my earlier response to this same basic question .... No
> one has ever lost their license, been fined, or gone to jail for
> communicating such information. We should not be running from things

181. Re: [APRSSIG:26022] Re: CONCERNS

From: Jon Ogden <jono@enteract.com>
Date: Tue, 7 Jul 98 10:41:13 -0500
To: <wo4u@juno.com>, <aprssig@tapr.org>
Message-ID: <199807071539.KAA05958@tapr.org>
Rendered body type: text/plain

>To the person that accused me of
>"breaking the law" on a post that I read yesterday ... all I can say is
>once you have had the experience you will probably be eating your words.

Since when does breaking Red Cross rules equal breaking the law?

I didn't know the US Constitution had been amended to give the American
Red Cross legislative power. When did this happen?

73,

Jon
KE9NA

Jon Ogden

jono@enteract.com
www.qsl.net/ke9na

"A life lived in fear is a life half lived."

182. Re: [APRSSIG:26021] aprs digi software

From: Wes Johnston <kd4rdb@eagnet.com>
Date: Tue, 07 Jul 1998 11:39:55 -0400
To: Mark Oppenheim <projunltd@compuserve.com>, aprssig@tapr.org
Message-ID: <3.0.32.19980707113953.0070104c@gena>
Rendered body type: text/plain

the wide parser is unnecessary... it'll keep a queue of packets for 30
seconds and not digi the same one twice in that 30 second period... that
solves the wide,wide,wide problem. I'll be keeping a checksum of the data
portion of the packet and checking it when deciding to digipeat a packet.
That way my tracker can send data every 10 seconds (if i desire), and as
long as it's packet is different than any packet heard inthe past 30
seconds, it will be digi'd. I'm also going to keep a queue of channel
activity for the past 8 hours, and when someone sends a querry (?APRS?),
the node will respond with the last known positions of any stations that
can't report on their own - like dumb trackers.

Here's a thought for people that send out wide,wide,wide.... when the node
hears such a packet, or one with RELAY at any position beyond the first
hop, have the NODE send an aprs formatted message to t he user saying
something like "Lamont, you big dummy! you shouldn't put a relay in that
positon"

wes

>What about a WIDE parser, so if someone sends out "WIDE,WIDE,WIDE...."
>(anything more than two wides in a row) then it's parsed to no more than
>two wides? (ie: someone sends WIDE,WIDE,WIDE and digi N2ABC hears it, then
>it goes out as N2ABC*,WIDE).
>
>A filter to block HID packets would also help.
>
>Of course, if it could count packets, and just ignore those that abuse the
>channel by digipeating every minute or less on an automatic basis, THAT
>would solve some problems and reduce channel congestion... but that would
>take up a lot of processing power, I would imagine.
>
>-Mark
>KD6KQ
>
Wes
Email: mailto:kd4rdb@usa.net
APRS: http://www.qsl.net/kd4rdb/aprs.htm
A good traveler has no fixed plans and is not intent on arriving.

183. Re: 440 Freq?

From: Mike Musick <71301.3106@compuserve.com>
Date: Tue, 7 Jul 1998 11:52:56 -0400
To: Blind.Copy.Receiver@compuserve.com
Message-ID: <199807071157_MC2-525C-6121@compuserve.com>
Rendered body type: text/plain

Jim notes:

>445.925 MHz is already coordinated in Kansas and is verbally agreed to
>in Missouri. I can not speak for the rest of the Midwest but we pushed
>for this allocation three years ago. It is now being used in St. Louis
>(I've just become aware of this in the past month) and will soon be
>employed in Kansas City as a high-speed backbone network between
>digis...

And Jim is right.

445.925 is "for all intents" coordinated in Missouri for APRS 9600bps packet. The exact mechanics are that we verified that it was "open" and arranged for the voice coordinator to "cross it off his list" as available for repeater links, and the packet coordinator put it on his list for APRS.

In the St. Louis area we have a new WIDE on 445.925/9600 (W0MA-5), thanks to the efforts of Terry, KI0BF. This works well in conjunction with the VHF-UHF gateway (up since late last year), which gates anything with a "WIDE" to the opposite side, and also gates VHF traffic to the IGATE receiver, which listens to 440. And my home site will digi UHF-UHF with both "UWIDE" and "RELAY".

445.925 is also being used in Illinois (primarily) for inter-digi linking at 9600, but (correct me if I'm wrong, Larry) I don't think there's anything preventing it from being a user frequency.

As to Jeff's comments about 9600bps UHF trackers not being practical... I beg to differ. My testing over a month's time was quite successful. The only thing in the way of my operating a full time 9600bps mobile is making the bucks available to replace the permanent tracker rig in the truck with a 9600bps-capable dual-bander.

  ...mike/N0QBF
     71301.3106@compuserve.com

184. Re: [APRSSIG:26024] Re: CONCERNS

From: "David C. Kovar" <kovar@webnexus.com>
Date: Tue, 07 Jul 1998 08:58:00 -0700
To: assib@imap1.asu.edu, aprssig@tapr.org
Message-ID: <199807071603.JAA20100@hub1.san-jose.webnexus.net>
Rendered body type: text/plain

I'm not sure I really agree with this. Perhaps it is a grey area? You're acting in support of the Red Cross and you're communicating information that they've gathered on people that they're serving. If they say "Do not broadcast the names of the people in our shelter." then perhaps you shouldn't broadcast that information? Your job, in my mind, is to communicate, not to decide what to communicate. Who to admit, who to turn away, when to close the shelter, and what names to pass to whom via what mechanism and when - that is the Shelter Manager's job. Let them do it.

-David

At 10:14 AM 7/7/98 -0500, assib@imap1.asu.edu wrote:
>Hi,
>Please do not forget that the Red-Cross does not decide what is proper
>info to be transmitted, and what is not ! (with all due respect to ARC - I am
>a volunteer too). The type of communications we are allowed in emergency is
>regulated in part 97.401 and 97.403.
>If a Red-Cross official has a problem that names be said on Ham-Radio
>frequencies then my guess is that the message is probably not important
>enough, in which case, should not be transmitted anyway.
>But if it is an emergency, then there should not be any problems sending any
>type of message. I am sure that a family that got seperated would not care
>having their names sent on the air if its for tracing purposes.
>I think that the important thing to remember is that the Ham-Radio operator
>operating the comm equipment is the party responsible for what is sent, not
>any ARC official. So the final call is always yours.
>bye, Assi
>
>On Tue, 7 Jul 1998 wo4u@juno.com wrote:
>
>> direction of the Shelter Manager. If the Shelter Manager gives us a
>> message to relay to another location - and it includes names - then

>> relay the information. If we can use a form of Packet to do the job so
>
>snip
>
>> makes the decision. However, if we are going to be working in Disaster
>> situations then we better be prepared to make decisions. We may not
>> always have someone there to tell us what to do.
>
>snip
>
>> Like I said in my earlier response to this same basic question .... No
>> one has ever lost their license, been fined, or gone to jail for
>> communicating such information. We should not be running from things
>

185. PalmPilot APRS Programs

From: Carl Hyde <carl.s.hyde@lmco.com>
Date: Tue, 07 Jul 1998 13:49:47 -0400
To: "aprssig@tapr.org" <aprssig@tapr.org>
Message-ID: <35A25FBB.C2D8F1D4@lmco.com>
Rendered body type: text/plain

Is anyone working on APRS software that will run on a PalmPilot? I have a Pilot and a tripmate and a KPC-3. Seems it would be an ideal APRS rig if only there were a terminal program for the pilot. If there are any pilot aplication developers out there send me an email.

186. Re: [APRSSIG:26026] Re: aprs digi software

From: Bob Bruninga <bruninga@nadn.navy.mil>
Date: Tue, 7 Jul 1998 14:24:06 -0400 (EDT)
To: Wes Johnston <kd4rdb@eagnet.com>
Cc: aprssig@tapr.org
Message-ID: <Pine.SOL.3.96.980707140420.25144F-100000@arctic>
Rendered body type: text/plain

CONCERNING THE WIDE,WIDE,WIDE problem:

> >What about a WIDE parser, so if someone sends out "WIDE,WIDE,WIDE...."

Driving through Tennesse on vacation, I used WIDE,WIDE,WIDE,WIDE,WIDE because all the digi's in the southeast are just about all converted to modern TRACE or WIDEn-n ROMS. Thus there was no problem with such a long path during my one day 800 mile trip. I saw few if any dupes.

THUS, I am removing the WIDE,WIDE,WIDE red-flag warning built into APRSdos. This constitutes a change in philosophy as shown below:

OLD PHILOSOPHY: Users were warned NOT to use W,W,W due to duplication...

NEW PHILOSOPHY: APRS network and digi owners are responsible to replace old WIDE digis with TRACE and or WIDEn-n digipeaters. Users are cautioned to use the minimum path necessary for their current application and not to flood the network except during special situations. Users are RESPONSIBLE for their own dupes. If they are causing excessive dupes, then they should modify their path accordingly...

187. A New Me

From: wo4u@juno.com
Date: Tue, 7 Jul 1998 14:27:38 -0400
To: jono@enteract.com, aprssig@tapr.org
Message-ID: <19980707.142946.3630.13.wo4u@juno.com>
Rendered body type: text/plain

Jon,

Maybe it is just me but after about 3 to 4 rounds of snips and partial quotes (things taken out of context), I have a hard time remembering how some of these threads even get started.

When I said I had been accused of "breaking the law" for transmitting Red Cross messages (that had sensitive content) by someone on this SIG, I was only repeating what I was being accused of ... and nothing more.   I know I was NOT breaking any law and I will continue to do what is necessary in any Emergency that I encounter. Yes, I am also the type of person who will administer First Aid to people in need. Most US citizens are so afraid of a Law Suit that they would rather standby and watch someone die than to step in and help. Not me!

There are times that I wish I could just read the messages on the SIG and

restrain myself from making any personal comments. I think this message
will be the "turning point" for me.

My real purpose in subscribing to this SIG was to keep up to date with
the latest plans and features of APRS. All of the tangents that we seem
to go off on do nothing to help me operate APRS any better. So, I think
I will refrain from offering any more comments about anything unless they
are DIRECTLY related to a feature or function of APRS.

Worn Out ...

Paul - WO4U

_____
You don't need to buy Internet access to use free Internet e-mail.
Get completely free e-mail from Juno at http://www.juno.com
Or call Juno at (800) 654-JUNO [654-5866]

188. Re: [APRSSIG:25995] Re: (no subject)

From: JDWalkerJr@aol.com
Date: Tue, 7 Jul 1998 14:29:58 EDT
To: wn1z@sojourner.wn1z.ampr.org, aprssig@tapr.org
Message-ID: <5751ae46.35a26927@aol.com>
Rendered body type: text/plain

In a message dated 7/7/98 12:47:44 AM Eastern Daylight Time,
wn1z@sojourner.wn1z.ampr.org writes:

> Yep, i asked him the same question off the list but no answer.
> RS-12 uplink on 15 meters, down on 10 or 2 -- USB!!

First of all, RS-12 was designed to have both a 15 meter and 2 meter uplink.
I've never used the 15 meter uplink, but I can tell you that the 2 meter
uplink works just fine.

Second, I made a mistake that may be causing some unnecessary confusion. I
subscribe to BOTH the APRSSIG and the AMSAT mailing list. I saw the report of
the Radio Shack amplifier in my e-mail and didn't pay attention to which list
it came from. My comment about the use of the amplifier on RS-12 was more
appropriate for the AMSAT list rather than this APRSSIG list. I would not be
surprised to find that there is very little interest here in RS-12 and its
uplink frequencies. I'm sorry for the confusion caused by raising the subject
here.

By the way, the amplifier works great for my APRS too.

Jimmy Walker
WA4ILO
Macon, GA

189. Re: [APRSSIG:26027] Re: 440 Freq?

From: Bob Bruninga <bruninga@nadn.navy.mil>
Date: Tue, 7 Jul 1998 14:36:06 -0400 (EDT)
To: Mike Musick <71301.3106@compuserve.com>
Cc: aprssig@tapr.org
Message-ID: <Pine.SOL.3.96.980707142511.25144G-100000@arctic>
Rendered body type: text/plain

My suggestion for using one of the FM simplex channels (445.925) for
APRS voice/Mic-E operations was based on what I thought was a nationwide
FM voice simplex channels. Apparently, some areas have coordinated that
channel for repeaters.

If 445.925 is NOT a nationwide FM simplex channel, then where are the FM
simplex channels? I know 446.000 is. We CANT go there, but can we find
an FM simplex channel that is agreed to nationally and use it as a
gathering place for APRS mobiles? So I guess the question is:

What are the FM simplex channels in those areas where 445.925 is
coordinated for repeaters?

190. Re: [APRSSIG:25992] Radio Shack Amplifier

From: JDWalkerJr@aol.com
Date: Tue, 7 Jul 1998 14:35:58 EDT
To: jono@enteract.com, aprssig@tapr.org

Message-ID: <b602c69c.35a26a8f@aol.com>
Rendered body type: text/plain

In a message dated 7/7/98 12:53:51 AM Eastern Daylight Time, jono@enteract.com
writes:

> Please, do not attempt to use it on SSB.

Thank you for the explanation for why the amplifier will not work for SSB. I
will be content to use it only on FM and CW. What a great hobby this is.
There is so much to learn and so may people willing to help. Thanks to
everyone who has responded to my question.

Jimmy Walker
WA4ILO
Macon, GA

191. RE: [APRSSIG:26024] Re: CONCERNS

From: George Kammerzell <GKammerzell@procard.com>
Date: Tue, 7 Jul 1998 12:51:54 -0600
To: "'aprssig@tapr.org'" <aprssig@tapr.org>
Message-ID: <34DA22FA4520D111BCFF00A0C920127C4C397F@smtp.procard.com>
Rendered body type: text/plain

OOOOH its getting nasty....and the predicament Im in...ham, APRSer, have
TNC and radio, volunteer and iI have all the prees ID stuff in my back
pocket

On Tuesday, July 07, 1998 9:55 AM, assib@imap1.asu.edu
[SMTP:assib@imap1.asu.edu] wrote:
> Hi,
> Please do not forget that the Red-Cross does not decide what is proper
> info to be transmitted, and what is not ! (with all due respect to ARC
- I am
> a volunteer too). The type of communications we are allowed in
emergency is
> regulated in part 97.401 and 97.403.
> If a Red-Cross official has a problem that names be said on Ham-Radio
> frequencies then my guess is that the message is probably not
important
> enough, in which case, should not be transmitted anyway.
> But if it is an emergency, then there should not be any problems
sending any
> type of message. I am sure that a family that got seperated would not
care
> having their names sent on the air if its for tracing purposes.
> I think that the important thing to remember is that the Ham-Radio
operator
> operating the comm equipment is the party responsible for what is
sent, not
> any ARC official. So the final call is always yours.
> bye, Assi
>
> On Tue, 7 Jul 1998 wo4u@juno.com wrote:
>
> > direction of the Shelter Manager. If the Shelter Manager gives us a
> > message to relay to another location - and it includes names - then
> > relay the information. If we can use a form of Packet to do the job
so
>
> snip
>
> > makes the decision. However, if we are going to be working in
Disaster
> > situations then we better be prepared to make decisions. We may not
> > always have someone there to tell us what to do.
>
> snip
>
> > Like I said in my earlier response to this same basic question ....
No
> > one has ever lost their license, been fined, or gone to jail for
> > communicating such information. We should not be running from
things
>
>
>

192. Re: CONCERNS

From: "Paul Christenson" <n3eop@hotmail.com>
Date: Tue, 07 Jul 1998 11:55:38 PDT
To: aprssig@tapr.org
Message-ID: <19980707185539.15786.qmail@hotmail.com>
Rendered body type: text/plain

>Please do not forget that the Red-Cross does not decide what is
>proper info to be transmitted, and what is not ! (with all due
>respect to ARC - I am a volunteer too). The type of communications we
>are allowed in emergency is regulated in part 97.401 and 97.403.

Sec. 97.401 Operation during a disaster.

(a) When normal communication systems are overloaded, damaged or
disrupted because a disaster has occurred, or is likely to occur, in
an area where the amateur service is regulated by the FCC, an amateur
station may make transmissions necessary to meet essential communication
needs and facilitate relief actions.

(In an emergency, the rules go out the window. Subparts b-d relate to
other special cases.)

Sec. 97.403 Safety of life and protection of property.

No provision of these rules prevents the use by an amateur station of
any means of radiocommunication at its disposal to provide essential
communication needs in connection with the immediate safety of human
life and immediate protection of property when normal communication
systems are not available.

Also, looking over Sec. 97.113 Prohibited transmissions, I don't see
anything prohibiting such traffic.

It sounds as though you may be confusing what is proper/appropriate, and
what is legal. If we are acting on behalf of any organization (not just
the Red Cross, but also when we provide support for races, parades, and
such), our concern is if such a transmission is LEGAL, not if it is
PROPER to go over the air. We may need to remind the officials that ham
radio is not a "secure" channel, but as long as it's legal, it's their
decision to send it or not.

>If a Red-Cross official has a problem that names be said on Ham-Radio
>frequencies then my guess is that the message is probably not
>important enough, in which case, should not be transmitted anyway.

Importance is not our concern. We don't know how important a given
piece of information is, anyway. If the channel is overloaded, tell the
official, and follow their instructions.

>I think that the important thing to remember is that the Ham-Radio
>operator operating the comm equipment is the party responsible for
>what is sent, not any ARC official. So the final call is always
>yours.

True, to an extent. It's OUR license on the line, but it's THEIR
traffic. If the traffic is legal, and they want it sent, then send it.

_____
Get Your Private, Free Email at http://www.hotmail.com

193. WX - millibars vs. Inches

From: Mark Oppenheim <projunltd@compuserve.com>
Date: Tue, 7 Jul 1998 15:29:45 -0400
To: APRS-USA <aprssig@tapr.org>
Cc: aprs-calif <aprs@lists.monterey.edu>
Message-ID: <199807071529_MC2-5270-FF7D@compuserve.com>
Rendered body type: text/plain

Gang-

-- disclaimer: This comes from an APRS-DOS user, so this may have already
been adopted in the Mac/Win and APRS+ versions....

A discussion I had with someone is that APRS seems to have adopted
millibars rather than inches of mercury for barometric pressure readings.
Since most of us (non-boating types, that is) don't use millibars, can
there be something in the programs that will display in inches/hg or (god,
I HATE to bring this up) changing the protocol to send inches instead?

 I would think that the "conversion" within the programs would be better -

- and perhaps something for those in metric areas so that Kpa could be
displayed.

Mark
KD6KQ

194. PALM Pilot stuff

From: kd4emi@juno.com (Michael A Kantor)
Date: Tue, 7 Jul 1998 15:36:22 -0400
To: aprssig@tapr.org
Message-ID: <19980707.153717.3542.0.kd4emi@juno.com>
Rendered body type: text/plain

I cant reveal the company etc but I am beta testing some new (commercial)
 software that will allow a variety of maps etc in a WIN CE system.
(from a well known map company--wink)

It wont be APRS compatable but, at least it'll be moving map display with
your GPS.

I am using it now on my 4 meg CE system. It works great !

I will be able to reveal more once the stuff is out of beta test. (3 more
weeks tops)

Mike KD4EMI@JUNO.COM

_____
You don't need to buy Internet access to use free Internet e-mail.
Get completely free e-mail from Juno at http://www.juno.com
Or call Juno at (800) 654-JUNO [654-5866]

195. PS

From: kd4emi@juno.com (Michael A Kantor)
Date: Tue, 7 Jul 1998 15:42:06 -0400
To: aprssig@tapr.org
Message-ID: <19980707.154206.3542.1.kd4emi@juno.com>
Rendered body type: text/plain

The software I mentioned will run MAPS (yes MAPS and topo maps)
on WIN CE and Palm Pilot.

I know there are a few Palm pilot guys around my area, if interested
 in seeing it, send me a msg...

The implications are great...

Now I can drive with my Hand held, GPS, and CE or P. Pilot and see a
moving map display as well as topo maps.
I am really gonna try to write something on WIN CE if it kills me ! We
need it !
Whats the situation Mark and Keith ?

(I think I'll hang on to my compass and paper topp map out in the woods
for
a while yet)
MIke KD4EMI@JUNO.COM

_____
You don't need to buy Internet access to use free Internet e-mail.
Get completely free e-mail from Juno at http://www.juno.com
Or call Juno at (800) 654-JUNO [654-5866]

196. Re: [APRSSIG:26035] Re: CONCERNS

From: Ray Vaughan <rvaughan@gate.net>
Date: Tue, 07 Jul 1998 16:20:13 -0400
To: GKammerzell@procard.com
Cc: aprssig@tapr.org
Message-ID: <1.5.4.32.19980707202013.00937c24@pop.gate.net>
Rendered body type: text/plain

We better not ever catch you talking to yourself. Could be a rules violation!

Same boat here. Flordia EAS Co-Chair too. I've already signed a
non-disclosure agreement with myself.

Ray, KD4BBM

At 01:56 PM 7/7/98 -0500, you wrote:

>OOOOH its getting nasty....and the predicament Im in...ham, APRSer, have
>TNC and radio, volunteer and iI have all the prees ID stuff in my back
>pocket

197. Southern CA WIDE WIDE WIDE

From: Dan Minear <DMinear@TRIDENTMS.COM>
Date: Tue, 7 Jul 1998 14:38:32 -0700
To: "'aprssig@tapr.org'" <aprssig@tapr.org>
Message-ID: <c=US%a=_%p=TRIDENT_DATACOM_%l=TMSNT1-980707213832Z-26@TMSNT1.tridentms.com>
Rendered body type: text/plain

Bob Bruninga's WIDE WIDE WIDE comments spurred me. Sorry for the wasted bandwidth out of area.

In Southern CA, there are now 4 WIDE digis that I think can hear each other (Oat Mtn, Mt Wilson, Loma Ridge, and San Bernadino Mts). I know that I can hear all 4 and they hear me from northern Orange County).

With a path of APRS via WIDE,WIDE you would be surprised at the activity and congestion it causes. It seems to me that what we need is for users to talk to each other in more than 1 line messages.

To that end, I propose that we start an APRS voice net for Southern CA. I haven't checked with the local packet net if it's still in operation (Terry AA6TN?), but even still I think there is a need for an APRS specific net.

I'll supply a high level 440 repeater for the net, but I don't think I will have all the time in the world to run it. Any takers? Any interest in a Southern CA email list? Send corrections/comments!

Dan Minear, N6RDK

>

198. Re: [APRSSIG:26033] Re: 440 Freq?

From: rbost@itexas.net (Roy Bost)
Date: Tue, 7 Jul 1998 16:37:50 -0500
To: <bruninga@nadn.navy.mil>, <aprssig@tapr.org>
Message-ID: <004f01bda9ef$80324d20$03000004@default>
Rendered body type: text/plain

Gee...I didn't think that my humble request for information would create such a large volume of comments!
Here is the history behind my request....some time back 1200b packet on 441.000 was the predominate form of packet in this area! We had a BPQ switch with a 1200b port on 441.00 and a 9600b port on a different (I forget which) 440 frequency. Not counting the BPQ switch I was the only one on 9600b. Since the advent of the internet, interest has died in the conventional forms of packet locally.
I have been approached by some of the 441 packet guys about APRS. They wanted to use their 441 rigs and not have to invest in 2m rigs. I have a KPC-4 and my 440 packet radio, so I thought a 2m - 440 gate would be a fun project! I have not gotten a reply (as of yet) from the TPRS 440 coordinator about a frequency to use so I'll probably either use 441.050 or the 445.925 simplex frequency.
Let's keep this discussion going! We need look to the future. APRS on 144.39 will reach saturation in many areas soon. There is plenty of bandwidth available on 440, we just need to find a spot!

Roy W Bost
N5TAM
rbost@itexas.net

199. Re: [APRSSIG:26033] Re: 440 Freq?

From: rbost@itexas.net (Roy Bost)
Date: Tue, 7 Jul 1998 16:37:50 -0500
To: <bruninga@nadn.navy.mil>, <aprssig@tapr.org>
Message-ID: <005201bda9ef$dc217520$03000004@default>
Rendered body type: text/plain

Gee...I didn't think that my humble request for information would create such a large volume of comments!
Here is the history behind my request....some time back 1200b packet on 441.000 was the predominate form of packet in this area! We had a BPQ switch with a 1200b port on 441.00 and a 9600b port on a different (I forget which) 440 frequency. Not counting the BPQ switch I was the only one on

9600b. Since the advent of the internet, interest has died in the conventional forms of packet locally.
     I have been approached by some of the 441 packet guys about APRS. They wanted to use their 441 rigs and not have to invest in 2m rigs. I have a KPC-4 and my 440 packet radio, so I thought a 2m - 440 gate would be a fun project! I have not gotten a reply (as of yet) from the TPRS 440 coordinator about a frequency to use so I'll probably either use 441.050 or the 445.925 simplex frequency.
    Let's keep this discussion going! We need look to the future. APRS on 144.39 will reach saturation in many areas soon. There is plenty of bandwidth available on 440, we just need to find a spot!

Roy W Bost
N5TAM
rbost@itexas.net

200. re: [APRSSIG:26029] PalmPilot APRS Programs

From: "Paul J. Toth-K2SEC" <K2SEC@gte.net>
Date: Tue, 7 Jul 1998 17:41:31 -0400
To: aprssig@tapr.org, carl.s.hyde@lmco.com
Message-ID: <BeyondMail.3.0.8998584570K2SEC@mail.gte.net>
Rendered body type: text/plain

The Sprouls have WinAPRS for Windows CE under development.

Paul J. Toth
K2SEC

Amateur Radio Is A CONTACT Sport. Make CONTACT Today!

---------- Original Text ----------

From: Carl Hyde <carl.s.hyde@lmco.com>, on 7/7/98 5:39 PM:

Is anyone working on APRS software that will run on a PalmPilot? I have a Pilot and a tripmate and a KPC-3. Seems it would be an ideal APRS rig if only there were a terminal program for the pilot. If there are any pilot aplication developers out there send me an email.
[Attachment: Beyond.rtf; application/x-beyondmail; 632 bytes]

201. WX alerts from NWS,SevStormCtr

From: aa8ei@eos.net
Date: Tue, 7 Jul 1942 19:12:34 -0400
To: APRS SIG <aprssig@tapr.org>
Message-ID: <l0313030348729f017088@205.133.149.155>
Rendered body type: text/plain

I sent a philosophy query to Bob Bruninga re manual and auto placement of WX info to make the NWS county highlighting work. Idea being to make all the serious stuff show up using the colored county alerts. This from watching lots of serious stuff happen with no notification on APRS.

There is the question of whether it would be good for all the tornado warnings, for instance, to show up on APRS, or not. Bob agreed that the idea was good in principle, and supported the concept of a 24/7 parsing system.

I stipulated conceptually the only bulletin info would be single line "type of alert, county(ies), from -til" and not the massive blank lines and other unnecessary info from WWIN (you should hear my computer try to pronounce "WWIN"!!).

I think it's doable. My resource is the SIU wx processor, which sends the NWS and Severe Storm Center alerts to my email. There are MANY such alerts when the wx is busy. I think that software could assess the relevance of each incoming alert, look at any that preceded it in n minutes, and decide whether to transmit it or not. I also think that the text files can be parsed to reduce the amount of info transmitted. This would be a transmission to activate the county highlighting, put a bulletin out, and then another transmission, if required , to cancel both (if the from-til timing does not automatically handle the cancellation).

If you want the info on getting the info from SIU, send me a private email.

Until I had the tornado warnings sent to me, I had no ideas how many WARNINGS are issued around the coutry. It's amazing.

I also offered to make these inputs manually when I can. I think that several such stations handling perhaps CONUS regions could keep the entire US APRS map covered for serious wx concerns. I'm not sure this would overload the inet

server, but it would sure get more information out for portions of the country
not now covered by auto county highlighting.

I sent a copy of my proposals and Bob's reply to the Sprouls (since I am only
Macish at the moment).

73, Tony

202. Re: [APRSSIG:26042] Re: 440 Freq?

From: Jon Ogden <jono@enteract.com>
Date: Tue, 7 Jul 98 19:14:07 -0500
To: <rbost@itexas.net>, <aprssig@tapr.org>
Message-ID: <199807080006.TAA14952@tapr.org>
Rendered body type: text/plain

>APRS on
>144.39 will reach saturation in many areas soon.

Please define saturation.

My definiton would be that 95% or more of the time the channel has
traffic on it. So it is nearly impossible to transmit any packets.

Here in Chicago, we have a fairly well developed network. The channel
loading is probably not even 25% of the time (that's a guess). Yes,
there may be some areas with more users than Chicago. However, I really
question wether the channel loading is even approaching saturation.
Sometimes the channel may be busy, but certainly not all the time.

What would be nice is if someone could monitor the amount of time there
is loading on the channel during a given day.

But I really think we are not even close to saturating the channel.

73,

Jon
KE9NA

Jon Ogden
KE9NA

http://www.qsl.net/ke9na

"A life lived in fear is a life half lived."

203. Re: [APRSSIG:26041] Southern CA WIDE WIDE WIDE

From: Bob Bruninga <bruninga@nadn.navy.mil>
Date: Tue, 7 Jul 1998 21:47:06 -0400 (EDT)
To: Dan Minear <DMinear@tridentms.com>
Cc: aprssig@tapr.org
Message-ID: <Pine.SOL.3.96.980707214354.15371E-100000@arctic>
Rendered body type: text/plain

On Tue, 7 Jul 1998, someone wrote

> In Southern CA, there are now 4 WIDE digis that I think can hear each
> other ...
> With a path of APRS via WIDE,WIDE you would be surprised at the activity
> and congestion it causes.

If they were all WIDEn-n digis, then one would only need to use the path
of WIDE2-2 to go out the same number of hops, and his packet would be 7
bytes shorter, and there would be no dupes from each digi... Everyone
wins... Your voice net is a good idea too...

204. Transmitting Red Cross Info

From: Ralph Milnes <milnes@openix.com>
Date: Tue, 07 Jul 1998 21:50:22 -0400
To: aprssig@tapr.org
Message-ID: <3.0.5.32.19980707215022.007adb50@openix.com>
Rendered body type: text/plain

I'm an ex-American Red Cross local Disaster Chair, and here's my take on using APRS or amateur radio to help ARC disaster victims. I don't claim that all this is the *official* ARC position, but I believe it's pretty accurate, and I hope that it will make sense as you read it.

As Barry, W9JBL, pointed out, the ARC is obligated to protect the confidentiality of all of its clients and any other victims -- safe, homeless, injured, or dead.

Generally, there is no need for ARC HQ to have a list of shelter residents' names and addresses during the first several days of a disaster. Simple population counts will suffice. Names and addresses will not be needed for Disaster Welfare Inquiries (see below) or other Red Cross recovery services for about 2 to 3 days. By then, there is usually a "secure" transfer route -- specifically telephone(fax) or courier. (The same would be true for reports from hospitals, morgues, and detailed damage assessment teams.) So, generally, Red Cross personnel should not be asking hams to relay specific names or addresses by radio (although an inexperienced ARC volunteer might -- incorrectly -- make such a request; yes, they're human).

That's not to say that in an extreme case, with proper ARC HQ approval, radio reports might be appropriate, but it should be highly unusual. (One exception might be an effort to re-unite *immediate* members of a family, but then you would be transmitting a specific name or two, not a general list.)

Since hams are normally acting as auxillary volunteers under the guidance and auspice of the ARC (per a Statement of Understanding), as Barry says, hams should follow ARC protocols. Hams shouldn't be making independent decisions to transmit names that have been collected by the ARC. (You are also likely to run afoul of government/EOC restrictions on information release.)

My advice: If you are asked to transmit an ARC list of names or addresses, first advise the ARC volunteer that radio is not a secure method and that information could be intecepted (packet being more secure than voice, obviously). Encourage the ARC personnel to get high level (operation HQ) approval for any such transmission -- to protect both of you. The point here is to try to insulate yourself from any reponsibility for any potential problems resulting from the release of confidential information.

Disaster Welfare REPORTS (radio messages sent at the request of victims themselves): Generally, ARC shelters are set up in out-of-danger areas where telephones will be available for shelter residents to call their relatives. The ARC tries to arrange for supplemental telephone service for shelter residents as a comfort item (telco agreements are usually in place for special services), but the ARC can't afford to get involved with relaying victim messages. If telephones were not available, then the ARC would probably welcome hams *directly* assisting the victims. The ARC would not be involved, other than to allow the activity in the shelter (the ARC has authority to permit/disallow *any* activities occuring on shelter premises).

It seems plausible to me that hams could send out welfare messages *at the request* of the victim/shelter resident, but I suggest you work with the ARC leaders to make sure they know what you are doing, especially if you are working on their clock. As a personal safeguard, I would get the resident's signed statement acknowledging the interception risk, before I made such a transmission. That may seem overly cautious, but again, the point is to have someone else accept the risk for your good deed! (Besides, such statements become a good record of all the good work you did!) If you prefer to operate without this self-protection, so be it.

Diaster Welfare INQUIRIES: Note that the ARC normally has a moritorium on handling any *incoming* victim inquiries from out-of-area relatives until 3 or more days after the disaster. That's because a.) the ARC will be too busy providing more important sheltering operations (with limited staff), and b.) by the time the ARC could track down the victim and respond to the relative, telephone services are usually restored and the victim has already called the out-of-area relatives. (It's a lot easier if the victim self-reports his/her whereabouts, rather than having the ARC -- or hams operating independently -- trying to track down the victim. Self-reporting is usually what happens.)

If you are asked to radio an inquiry *into* the disaster area, my advice is that you tell the relatives to instead contact their local ARC chapter where they can fill out an ARC Disaster Welfare Inquiry form after the moritorium expires.

One final word on the media: They can be good alies. Yes, they may try to
obtain information they should not have, and you must ensure they don't get
it; but they can also be useful in spreading the word about the good work
that hams (and the ARC) do. If you are a ham working for the ARC, let the
ARC handle the media. If you are working independently, try to work with
the media without jeopardizing any confidentiality. They just want an
interesting story and you can provide it.

Ralph, KC2RLM
Southeast Morris NJ ARC
Chatham NJ ARES

>Date: Tue, 07 Jul 1998 06:39:12 -0500
>From: "John B. Leonard, Jr" <jleonard@tbcnet.com>
>To: bruninga@nadn.navy.mil
>Cc: aprssig@tapr.org
>Subject: Re: CONCERNS
>Message-ID: <3.0.5.32.19980707063912.00974850@tbcnet.com>
>
>Bob, this may help answer your question. It's from the Red Cross
>regulation concerning Mass Care/Shelters. It pretty much defines the
>problem and the responsibility of the RC people in charge of this stuff:
>
>The "3000 Series" is the ARC's last word on Disaster Services , and the
>3031 covers the shelter area.
>
>There's been some discussion along this thread of "getting around" or
>"ignoring" the rules because they're perceived to be wrong. That's not why
>ARRL and ARC signed a Memo of Understanding. They agreed to cooperate
>within each other's policies and procedures. But then again this is only
>within the RC's circle of influence. Other H&W avenues (NTS, etc.) may not
>have these limitations.
>
>jbl
>
>>FYI-
>>ARC 3031 "Mass Care-Preparedness and Operations", Pg. 10, "Assisting
>Disaster Welfare Inquiry", para. 4:
>>   "The shelter manager must be aware of the importance of confidentiality
>in gathering and maintaining information about shelter occupants. Such
>information should be used only within the Red Cross. Specific requests
>for related information from the media and other agencies should be
>referred to administrative staff."
>>
>>The reason behind all of this confidentiality is that the US Congress gave
>the RC a mandate way back in the early 1900's to alleviate suffering due to
>disaster-related causes. By ensuring confidentiality, it sends everyone a
>message that no one having reason to use RC services will have his/her
>identity released to the public.
>>
>>What does this have to do with ham radio/APRS? Because ham radio, by its
>very nature, can be monitored, even packet. Hence the confict between
>NTS/Health and Welfare messages that ham radio does so well, and the
>Disaster Welfare Inquiry that is the RC way of passing disaster-related
>traffic.
>>
>>The bottom line is that the RC wants confidentiality maintained. Ham
>radio can't guarantee that.
>>
>>jbl
>>
>>At 10:38 PM 7/6/98 -0500, you wrote:
>>I once keyboarded out a list of all "survivors" in the early days of
>>packet. THis list definately DID not mention any "victims". It was only
>>a list of all of the people coming into the shelter that were OK. I have
>>always wondered if this was a screw-up on my part...
>>None of the red cross people said anything. In fact, they were
>>feeding me the lists of names...
>>
>>But a definitive answer for all of us APRS folks would help...
>>
>>
>---
>J Barry Leonard/W9JBL
>DeKalb IL E-MAIL mailto:jleonard@tbcnet.com
>WWW Home Page http://tbcnet.com/~jleonard/home.html

>American Red Cross Disaster Services -Rockford IL Chapter

205. Re: CONCERNS

From: n8exf@juno.com (R L BOEHM)
Date: Tue, 7 Jul 1998 23:42:27 -0400
To: aprssig@tapr.org
Message-ID: <19980707.234228.11382.3.N8EXF@juno.com>
Rendered body type: text/plain

maybe we ought to start a new SIG, the Us vs Them.sig.
Anyway, at the risk of wasting bandwidth, and all the other possible sins, I need to tell of a personal experiance.
I (an many others) was in Hawaii for Huricane Iniki. I can tell you that the local Hams could not understand the "rules" set forth by the ARC. I was stuck in the middle, being a ARC DSHR volunteer and a HAM. Hams wanted immediate communications, something that we all have come to expect. The ARC did not want to deviate from the "3 day rule". The local Hawaiian hams were not at all happy! Hams really must remember that the ARC is in control and we must play by thier rules as much as that may go against all WE believe in.
As a side note, remember that if the ARC doesn't like what you have done, you wil not be asked back again. We had an assistant job director that was at Hugo and remembered the problems encountered with the KG4 Ham(s) and thought that AA8EI & I were cut from the same roll of coax..

73 de Bob, N8EXF // KN
homepage http://www.qsl.net/n8exf

Igloos are polar bear snacks, cruchy on the outside and warm and chewy on the inside.

_____
You don't need to buy Internet access to use free Internet e-mail.
Get completely free e-mail from Juno at http://www.juno.com
Or call Juno at (800) 654-JUNO [654-5866]

206. Peet Bros Problem

From: "Rich Casey" <casey@acm.org>
Date: Tue, 7 Jul 1998 23:51:45 -0500
To: <aprssig@tapr.org>
Message-ID: <01bdaa2c$1bead660$b83daccd@casey6.startext.net>
Rendered body type: text/plain

Speaking of Peet Brothers, my wired .1 rain gauge has stopped taking readings after less than 18 months of operation. I can't see anything physically wrong with it, have exercised it a bit, but can't get it to come back to life. Any troubleshooting ideas before I break down and open my wallet for new one?

Rich
Rich Casey, Dallas TX | Amateur Radio N5CSU
casey@acm.org | http://www.startext.net/homes/rcasey
--- Think globally, connect locally ---

207. Re: [APRSSIG:26041] Southern CA WIDE WIDE WIDE

From: "Ken Mirabella" <kjm@flo-bin.com>
Date: Tue, 7 Jul 1998 21:49:58 -0700
To: <DMinear@tridentms.com>, <aprssig@tapr.org>
Message-ID: <004201bdaa2b$dc9f8780$84bfabc7@local.host>
Rendered body type: text/plain

Greetings:

Yes, there is a lot of increasing digi traffic in So. California and it would seem that maybe an e-mail list would be in order, but we already have a list for all of California pertaining to the unification of North and South (frequency wise) maybe the Northern are having the same problem and we could use that list. Or if there is a real interest in a separate mail list I could set one up on our ocraces.org server.

I converted our Loma Ridge (W6KRW-10) digi over to wide-n about a month ago and by looking at the local maps I see that quite a few other digis in the area have converted also. We were even thinking of running our proprietary "Tracker" software on the digi (you need a 8088 to run it) which strips out all dupes and parses down the data stream, but decided against it because it doesn't handle the mic-e data as yet. We have used the Tracker program for two years now during the Baker to Vegas Race in the desert. If all the digis are addressed in the software it works great for a linked system.

Cap, what do you think of discussing digis in California on the move to
144.39 list.

73, Ken, KM6YH
OCRACES, W6KRW-10, Loma Ridge, CA

-----Original Message-----
From: Dan Minear <DMinear@tridentms.com>
To: aprssig@tapr.org <aprssig@tapr.org>
Date: Tuesday, July 07, 1998 3:08 PM
Subject: [APRSSIG:26041] Southern CA WIDE WIDE WIDE

>Bob Bruninga's WIDE WIDE WIDE comments spurred me. Sorry for the wasted
>bandwidth out of area.
>
>In Southern CA, there are now 4 WIDE digis that I think can hear each
>other (Oat Mtn, Mt Wilson, Loma Ridge, and San Bernadino Mts). I know
>that I can hear all 4 and they hear me from northern Orange County).
>
>With a path of APRS via WIDE,WIDE you would be surprised at the activity
>and congestion it causes. It seems to me that what we need is for users
>to talk to each other in more than 1 line messages.
>
>To that end, I propose that we start an APRS voice net for Southern CA.
>I haven't checked with the local packet net if it's still in operation
>(Terry AA6TN?), but even still I think there is a need for an APRS
>specific net.
>
>I'll supply a high level 440 repeater for the net, but I don't think I
>will have all the time in the world to run it. Any takers? Any
>interest in a Southern CA email list? Send corrections/comments!
>
>
>Dan Minear, N6RDK
>
>>
>
>

208. Re: [APRSSIG:26037] WX - millibars vs. Inches

From: "O.C. Winton wn1z" <wn1z@sojourner.wn1z.ampr.org>
Date: Tue, 07 Jul 1998 23:14:26 -0700
To: projunltd@compuserve.com, aprssig@tapr.org
Message-ID: <6166@babylon.wn1z.ampr.org>
Rendered body type: text/plain

At 02:36 PM 7/7/98 -0500, Mark Oppenheim wrote:
>Since most of us (non-boating types, that is) don't use millibars, can
>there be something in the programs that will display in inches/hg or (god,
>I HATE to bring this up) changing the protocol to send inches instead?

The whole world is on millibars / kiloPascals. Why go back to the
dark ages with inches?

Also, the metric system has been LEGAL in the U.S. since
the 1860s.   Time to change. Leave aprs metric if that's the
way it is now!

Orrin wn1z

209. Re: Southern CA WIDE WIDE WIDE

From: Cap Pennell <cap@cruzio.com>
Date: Tue, 07 Jul 1998 23:31:20 -0700
To: aprssig@tapr.org, Dan Minear <DMinear@tridentms.com>,
        aprs@lists.monterey.edu
Message-ID: <3.0.5.32.19980707233120.0087a8b0@mail.cruzio.com>
Rendered body type: text/plain

At 11:55 PM 7/7/98 -0500, Ken Mirabella KM6YH wrote:
>Yes, there is a lot of increasing digi traffic in So. California and it
>would seem that maybe an e-mail list would be in order, but we already have
>a list for all of California pertaining to the unification of North and
>South (frequency wise) maybe the Northern are having the same problem and we
>could use that list. Or if there is a real interest in a separate mail list
>I could set one up on our ocraces.org server.

<snip>
>Cap, what do you think of discussing digis in California on the move to
>144.39 list.
>
>73, Ken, KM6YH

The California APRS mailing list is intended for discussion of any and all aspects of APRS in (or near) California. It is an open and informal list, almost anything goes (including chocolate-chip cookie recipes).
For info (including subscription instructions) about
the California APRS users' mailing list, send email to
admin@lists.monterey.edu   with only the message: info aprs
73, Cap KE6AFE
--
Cap Pennell
Santa Cruz, CA 95062-1002   3658.93N/12200.91W [CM86xx]
email: cap@cruzio.com   home page: http://members.cruzio.com/~cap
packet radio: KE6AFE @ki6eh.#wcca.ca.usa.noam

210. Precision Mapping CD

From: Mark Fellhauer <sparkfel@primenet.com>
Date: Tue, 07 Jul 1998 23:42:58 -0700
To: aprssig@tapr.org
Message-ID: <3.0.5.32.19980707234258.007f5100@pop.primenet.com>
Rendered body type: text/plain

Where's the best place to get the PM CD ROM? Are the Sprouls carrying it?

73,

Mark
KC7BXS

211. Re: Radio Shack Amplifier

From: Dave.Ackrill@NOTESMAIL.powergen.co.uk
Date: 08 Jul 1998 10:57:09 +0000
To: aprssig@tapr.org
Message-ID: <980708105709Z*/G=Dave/S=Ackrill/O=NOTESMAIL/PRMD=POWERGEN/ADMD=CWMAIL/C=GB/@MHS>
Rendered body type: text/plain

If it's an 'FM' amplifier and not linear, then I wouldn't suggest
using it for SSB at all! Not without modifying the biasing for a
linear mode of operation. (This means hacking out several components
and redesigning the amplifier. Unless you've done this before, I
wouldn't advise doing it. By the time youve finished you might as
well have made a different amplifier, properly designed for linear
amplification).

It will be fine for CW, however, as CW doesn't require a linear
amplifier.

Since you are using it for a non-linear mode, CW, then you should be
OK. If you have a circuit diagram, see if there was any provision
made for hard wiring via an external relay. If not, see if you can
put a switch between a suitable supply voltage and the relay. A good
place to look is around the RF sensing circuit, as that's what that
circuit does, detects an RF input and fires the change over relays,
probably from the supply voltage.

HTH.

Dave (G0DJA)

212. Re: [APRSSIG:26040] Re: CONCERNS

From: "Kevin Heyboer" <kd4uyr@gte.net>
Date: Wed, 8 Jul 1998 07:44:08 -0400
To: <rvaughan@gate.net>, <aprssig@tapr.org>
Message-ID: <004401bdaa65$cb65b0e0$f6f3ffd0@kh>
Rendered body type: text/plain

Press ID, oh thats nothing, try carrying a badge in your back pocket, hee
hee
-----Original Message-----
From: Ray Vaughan <rvaughan@gate.net>
To: aprssig@tapr.org <aprssig@tapr.org>
Date: Tuesday, July 07, 1998 4:19 PM
Subject: [APRSSIG:26040] Re: CONCERNS

>We better not ever catch you talking to yourself. Could be a rules
violation!
>
>Same boat here. Flordia EAS Co-Chair too. I've already signed a
>non-disclosure agreement with myself.
>
>Ray, KD4BBM
>
>At 01:56 PM 7/7/98 -0500, you wrote:
>>OOOOH its getting nasty....and the predicament Im in...ham, APRSer, have
>>TNC and radio, volunteer and iI have all the prees ID stuff in my back
>>pocket
>

213. Re: [APRSSIG:26052] Re: WX - millibars vs. Inches

From: "Kevin Heyboer" <kd4uyr@gte.net>
Date: Wed, 8 Jul 1998 07:53:35 -0400
To: <wn1z@sojourner.wn1z.ampr.org>, <aprssig@tapr.org>
Message-ID: <006e01bdaa67$188ba400$f6f3ffd0@kh>
Rendered body type: text/plain

Millibars are used because that is the NWS standard....it isn't that hard to
figure out.....1013 is sea level pressure...anything above is high, anything
below is low.
-----Original Message-----
From: O.C. Winton wn1z <wn1z@sojourner.wn1z.ampr.org>
To: aprssig@tapr.org <aprssig@tapr.org>
Date: Wednesday, July 08, 1998 2:18 AM
Subject: [APRSSIG:26052] Re: WX - millibars vs. Inches

>At 02:36 PM 7/7/98 -0500, Mark Oppenheim wrote:
>>Since most of us (non-boating types, that is) don't use millibars, can
>>there be something in the programs that will display in inches/hg or (god,
>>I HATE to bring this up) changing the protocol to send inches instead?
>
>
>The whole world is on millibars / kiloPascals. Why go back to the
>dark ages with inches?
>
>Also, the metric system has been LEGAL in the U.S. since
>the 1860s.   Time to change. Leave aprs metric if that's the
>way it is now!
>
>
>Orrin wn1z
>

214. Re: [APRSSIG:25998] Re: Radio Shack Amplifier

From: Glenn Little <glittle@awod.com>
Date: Wed, 08 Jul 1998 08:28:24 -0400
To: wb4iuy@amsat.org
Cc: aprssig@tapr.org
Message-ID: <3.0.5.16.19980708082824.0bef5fe2@awod.com>
Rendered body type: text/plain

The amplifier is FM (Class C). SSB requires linear amplification (conducts
foe most of the cycle). A Class C amp only conducts foe a short period of
the cycle. The amplifier would have to be rebiased. An extensive
undertaking.

At 10:48 PM 7/6/98 -0500, you wrote:
>>have thought about it, I'm realizing that the TR switch would be a
problem. I
>>wonder if some simple mod could adapt it to SSB? Maybe hard wire a TR
switch?
>>Any suggestions, warnings, etc. No jeering please.
>
>I've not looked at the R/S amp, but many amps use an NPN (or FET) switch on
>the "cold" side of the coil in the T/R relay. In most of these applications,
>a small polarized electrolytic cap (about 1-2uf) can be connected from the
>base (gate) to the collector (drain) to modify the T/R relay to quick
>attack-slow decay. Increase the value of the cap to increase the decay time.
>Connect the + lead of the cap to the collector (drain).
>
>73
>Dave WB4IUY
>

>
>

Glenn Little   glittle@awod.com   QCWA LM 28417
Amateur Callsign: WB4UIV   wb4uiv@amsat.org   AMSAT LM 2178
QTH: Goose Creek, SC USA (EM92xx)   ARRL TAPR
---

215. Re: [APRSSIG:26046] Re: 440 Freq?

From: "Gregory \"Lin\" Holcomb Jr." <glfh@localone.net>
Date: Wed, 8 Jul 1998 08:29:48 -0400
To: <aprssig@tapr.org>
Message-ID: <000001bdaa6d$52db41a0$cf042299@n4yci>
Rendered body type: text/plain

My thought,
Isn't the beauty of UI Frames that if a packet gets missed it will be picked up later?
Wouldn't this allow for an over loaded frequency to still pass communications, Even if the channel load was, lets say 125%. I know that there would be a point at which it could become a problem (major delays) But your aprs station is going to know that it was not digied and try again after a while. Trackers on the other hand dont know if they have been heard or not, but most trackers tx enough that it really won't matter.
just my take right or wrong? comments welcome as long as I dont have to break out the SCBA Respirator and fire retardant suit. :)
73 Lin N4YCI
-----Original Message-----
From: Jon Ogden <jono@enteract.com>
To: aprssig@tapr.org <aprssig@tapr.org>
Date: Tuesday, July 07, 1998 8:50 PM
Subject: [APRSSIG:26046] Re: 440 Freq?

>>APRS on
>>144.39 will reach saturation in many areas soon.
>
>Please define saturation.
>
>My definiton would be that 95% or more of the time the channel has
>traffic on it. So it is nearly impossible to transmit any packets.
>
>Here in Chicago, we have a fairly well developed network. The channel
>loading is probably not even 25% of the time (that's a guess). Yes,
>there may be some areas with more users than Chicago. However, I really
>question wether the channel loading is even approaching saturation.
>Sometimes the channel may be busy, but certainly not all the time.
>
>What would be nice is if someone could monitor the amount of time there
>is loading on the channel during a given day.
>
>But I really think we are not even close to saturating the channel.
>
>73,
>
>Jon
>KE9NA
>
>
>
>
>-------------------------------------
>Jon Ogden
>KE9NA
>
>http://www.qsl.net/ke9na
>
>
>"A life lived in fear is a life half lived."
>
>

216. QSY

From: "Dennis Todd" <dennytodd@email.msn.com>
Date: Wed, 8 Jul 1998 06:09:08 -0700
To: "APRS SIG" <aprssig@tapr.org>
Message-ID: <003601bdaa71$9870d640$7c8dfbd0@default>
Rendered body type: text/plain

These DIGI have indicated they will be QSYing to 144.39 with in the next 3
weeks.

KA6CDY-1 In Victor Vile Ca.

N7ZEV-1, N7ZEV-2 In Las Vegas Nv.

Denny Todd
KC7RVK

217. Re: [APRSSIG:26054] Precision Mapping CD

From: owen8914@dpnet.net (William Owens)
Date: Wed, 08 Jul 1998 09:12:19 -0400
To: sparkfel@primenet.com
Cc: aprssig@tapr.org
Message-ID: <35A37032.E3C7B967@dpnet.net>
Rendered body type: text/plain

Mark Fellhauer wrote:

> Where's the best place to get the PM CD ROM? Are the Sprouls carrying it?
>

Yes they were, $43.00 for the CD.

218. RE: [APRSSIG:26059] Re: 440 Freq?

From: "Demos Doulou" <ddoulou@gte.net>
Date: Wed, 8 Jul 1998 09:22:40 -0400
To: <aprssig@tapr.org>
Message-ID: <002b01bdaa73$7b7ea420$05f3ffd0@wingate>
Rendered body type: text/plain

In our area, Dos APRS reports, at times, 400% or more on channel load, and
we never notice much of a delay in keyboard communications.

73

Demos Doulou KR4US
Pinellas Cty, Florida
 ACS Radio Officer
kr4us@amsat.org
ddoulou@gte.net

> -----Original Message-----
> From: aprssig@tapr.org [mailto:aprssig@tapr.org]On Behalf Of Gregory
  Even if the channel load was, lets say 125%.

219. Re: [APRSSIG:26059] Re: 440 Freq?

From: Bob Bruninga <bruninga@nadn.navy.mil>
Date: Wed, 8 Jul 1998 09:48:28 -0400 (EDT)
To: "Gregory \"Lin\" Holcomb Jr." <glfh@localone.net>
Cc: aprssig@tapr.org
Message-ID: <Pine.SOL.3.96.980708094432.13006F-100000@arctic>
Rendered body type: text/plain

On Wed, 8 Jul 1998, Gregory "Lin" Holcomb Jr. wrote:

> Isn't the beauty of UI Frames that if a packet gets missed it will be picked
> up later?

Has nothing to do with UI frames. And since FIXED APRS stations only
transmit once every 30 minutes, a single missed packet leaves that person
out of the net for 30 miuntes. A LONG time in the real-world...
>
> Wouldn't this allow for an over loaded frequency to still pass
> communications, Even if the channel load was, lets say 125%.

Fundamental theory for an ALOHA channel like APRS is that maximum
throughput occurs when the channel is less than 18% busy!

> I know that
> there would be a point at which it could become a problem (major delays) But
> your aprs station is going to know that it was not digied and try again
> after a while.

NO, APRS does not know it had a collision. If a packet is lost, it is
lost forever.

220. Re: [APRSSIG:26059] Re: 440 Freq?

From: Jon Ogden <jono@enteract.com>
Date: Wed, 8 Jul 98 08:55:39 -0500
To: <glfh@localone.net>, <aprssig@tapr.org>
Message-ID: <199807081353.IAA03239@tapr.org>
Rendered body type: text/plain

>Wouldn't this allow for an over loaded frequency to still pass
>communications, Even if the channel load was, lets say 125%.

Maybe I misunderstand what channel loading is, but my understanding of it
is that a 100% loaded channel will have RF carriers present all of the
time. When one station stops TXing, another immediately chimes in. So I
know not how a channel could be loaded at 125%.

> Trackers on the other hand dont know if they have been heard
>or not, but most trackers tx enough that it really won't matter.

How can you say that trackers don't know if they've been heard? Mine
hears digis all the time. Yes, if you have a tracker that's a TX only,
then I agree, but they can hear digis.

However, since all packets sent via APRS are unconnected, there is no
acknowledgement that you were heard. So I guess this is moot anyhow.
The only way you can know if you were heard is if you see your positi
digipeated. Both a mobile and a base can generally see that.

73,

Jon
KE9NA

Jon Ogden

jono@enteract.com
www.qsl.net/ke9na

"A life lived in fear is a life half lived."

221. Re: [APRSSIG:26062] Re: 440 Freq?

From: Bob Bruninga <bruninga@nadn.navy.mil>
Date: Wed, 8 Jul 1998 09:55:02 -0400 (EDT)
To: Demos Doulou <ddoulou@gte.net>
Cc: aprssig@tapr.org
Message-ID: <Pine.SOL.3.96.980708094900.13006G-100000@arctic>
Rendered body type: text/plain

On Wed, 8 Jul 1998, Demos Doulou wrote:

> In our area, Dos APRS reports, at times, 400% or more on channel load, and
> we never notice much of a delay in keyboard communications.

The APRSdos channel load display is normalized to 36% (which is optimum
for a CSMA channel). So, when you see 100% on APRSdos, this means that
the channel is 36% saturated and is being used at the optimum rate.

It will rise above that at times, but during the higher rates, there are
many packets being lost to collisions.

* In my previous message I said an ALOHA channel like APRS really is
optimum at 18% and here, I am saying 36%. The difference is that AX.25 is
actually a CSMA channel (Carrier sense, multiple access), but since most
home stations cannot hear collisions with other home stations, they are
not really operating in a CSMA envirionment and are more like the hidden
transmitter problem which peaks at 18%. SO to be optimistic, in APRSdos,
i used the 36% figure as the baseline.

222. Re: [APRSSIG:26044] re: PalmPilot APRS Programs

From: Will KB9JTT <aprs@rocketmail.com>
Date: Wed, 8 Jul 1998 07:30:20 -0700 (PDT)
To: aprssig@tapr.org
Message-ID: <19980708143020.17109.rocketmail@web2.rocketmail.com>
Rendered body type: text/plain

---"Paul J. Toth-K2SEC" <K2SEC@gte.net> wrote:
>
> The Sprouls have WinAPRS for Windows CE under

> development.
>

However, the subject of this thread is APRS for the
PalmPilot, which is most certainly not a WinCE machine.
In answer to the original poster, YES - someone is
developing a PalmAPRS. I won't say who (it's not me,
although I am a PalmOS developer) but he's posted a
few messages about it which should be in the
archives. IIRC, it'll take a PalmOS 3.0 device
(PalmIII or upgraded PalmPilot) to make full use of
all of its features, but will run on a PalmPilot
Professional.

73

_____
DO YOU YAHOO!?
Get your free @yahoo.com address at http://mail.yahoo.com

223. MAPFIX and MAKEMAP

From: Bob Bruninga <bruninga@nadn.navy.mil>
Date: Wed, 8 Jul 1998 10:36:09 -0400 (EDT)
To: aprssig@tapr.org
Message-ID: <Pine.SOL.3.96.980708103333.4231B-100000@arctic>
Rendered body type: text/plain

I just posted the source code for MAPFIX37.BAS and MAKEMAP2.BAS.

I thought these were always posted on tapr, but just was informed that
they had been lost recently. ANyway, they will run under QB.EXE. If you
only have QBASIC.EXE (built into DOS 5.0 and later) then you will have to
remove the INTERRUPT lines (these are for the mouse)...

THis may allow some of you to have more flexibility in your mapmaking...

WB4APR, bob

224. RE: [APRSSIG:26063] Re: 440 Freq?

From: "Demos Doulou" <ddoulou@gte.net>
Date: Wed, 8 Jul 1998 10:21:32 -0400
To: <bruninga@nadn.navy.mil>, <aprssig@tapr.org>
Message-ID: <002d01bdaa7b$b47e0920$05f3ffd0@wingate>
Rendered body type: text/plain

How about having the software recognize that it did not get digied and then
continue to try in 1 minute intervals until it sees the packet digied, then
reset back to 30 minutes.

73

Demos Doulou KR4US
Pinellas Cty, Florida
 ACS Radio Officer
kr4us@amsat.org
ddoulou@gte.net

> -----Original Message-----
> From: aprssig@tapr.org [mailto:aprssig@tapr.org]On Behalf Of Bob
>
> > Isn't the beauty of UI Frames that if a packet gets missed it
> will be picked
> > up later?
>
> Has nothing to do with UI frames. And since FIXED APRS stations only
> transmit once every 30 minutes, a single missed packet leaves that person
> out of the net for 30 miuntes. A LONG time in the real-world...
>
>

225. Re: [APRSSIG:26063] Re: 440 Freq?

From: Robert Kirk <kirk@neptune.gsfc.nasa.gov>
Date: Wed, 08 Jul 1998 11:09:38 -0400
To: aprssig@tapr.org
Message-ID: <3.0.1.32.19980708110938.00a237f0@neptune.gsfc.nasa.gov>
Rendered body type: text/plain

At 08:56 08-07-98 -0500, Bob Bruninga wrote:

>Has nothing to do with UI frames. And since FIXED APRS stations only
>transmit once every 30 minutes, a single missed packet leaves that person
>out of the net for 30 miuntes. A LONG time in the real-world...

It's really not a long time in my view. APRS is a marvelous system
for getting position *information* out to a large group. But a stationary
qth is not really very much in the way of new *information*. Even if
it missed 5 out of 6 times, you'd still get be cued that the station is there
every 3 hours. It hasn't changed and still, of course, is kept on your
screen, P list, heard list, etc. You can't ask for more.

My preference is to let the mobiles perk away as often as they want
at the expense of the sitters. There's plenty of room on the frequency
to allow that.

Bob Kirk
N3OZB

226. Re: Southern CA WIDE WIDE WIDE

From: "Paul Christenson" <n3eop@hotmail.com>
Date: Wed, 08 Jul 1998 08:16:00 PDT
To: aprssig@tapr.org
Message-ID: <19980708151600.10856.qmail@hotmail.com>
Rendered body type: text/plain

On Tue, 7 Jul 1998 20:55:32 -0500 (CDT), Sir Bob thus spoke:

>If they were all WIDEn-n digis, then one would only need to use the
>path of WIDE2-2 to go out the same number of hops,

So whose TNCs support the WIDEn-n protocol? (And is it available for an
old MFJ?)

_____
Get Your Private, Free Email at http://www.hotmail.com

227. WX - millibars vs. Inches

From: Mark Oppenheim <projunltd@compuserve.com>
Date: Wed, 8 Jul 1998 12:44:34 -0400
To: APRS-USA <aprssig@tapr.org>
Message-ID: <199807081244_MC2-5289-551A@compuserve.com>
Rendered body type: text/plain

No where in the message did I infer that millibars wasn't needed.

I also said that it would be nice if APRS programs could display in
millibars/inches/Kpa - and secondary to that, changing the protocol (which
I think would be detrimental to the slowly growing user base of overseas
ops that are starting to make their own maps and use APRS) which of course,
I don't think is in anyone's best intrest to do.

However, despite what some say, NWS forcasts are in inches. Aviation
forecasts are in inches. The only community that seems to use mb on a
regular basis are boaters.

As a pilot, I'd just like to see something I understand like "30.02" on my
APRS screen, rather than "1012.8". A user selectable display within that
user's APRS program would be ideal. That way, users could display what
they like to see, and the fact that APRS squirts out millibars or
micrometers from the RF port wouldn't matter one bit.

Unfortunately, feet and inches are going to be around for a long time,
mainly because the worldwide aviation world has adopted it, and if you need
more reinforcement that the industry moves to change slowly - consider the
fact that all their VHF comminicatons are still using AM :-)

-Mark

---------- Orrin, wn1z wrote:

>Message-Id: <6166@babylon.wn1z.ampr.org>

At 02:36 PM 7/7/98 -0500, Mark Oppenheim wrote:
>Since most of us (non-boating types, that is) don't use millibars, can
>there be something in the programs that will display in inches/hg or (god,
>I HATE to bring this up) changing the protocol to send inches instead?

The whole world is on millibars / kiloPascals. Why go back to the
dark ages with inches?

Also, the metric system has been LEGAL in the U.S. since
the 1860s.   Time to change. Leave aprs metric if that's the
way it is now!

228. Palm & WinCE APRS

From: Mike Musick <71301.3106@compuserve.com>
Date: Wed, 8 Jul 1998 12:47:32 -0400
To: Blind.Copy.Receiver@compuserve.com
Message-ID: <199807081252_MC2-5288-E624@compuserve.com>
Rendered body type: text/plain

Given the queries and conjectures about APRS versions for handheld PC's, it
sort of sounds like it's time to set the record straight.

"Palm Pilot" - now officially "PalmOS device", because the Pilot pen company
sued 3Com over the use of "Pilot". Anyway... I have been writing a flavor of
APRS for the Palm III since about March, which is being called "palmAPRS". I am
planning an "early beta" by the end of the month, and hope that it doesn't slip
again. I might have to release what is better described as an "alpha"
application - an incomplete, in-development version - but we'll just have to
see how that goes.

"WinCE" - I won't pretend to answer for Mark Sproul, but since we use the same
basic programming platform (Metrowerks CodeWarrior), I am aware of what he is
waiting for to complete the "port" (transfer) of Win/MacAPRS to the WinCE
platform. In this particular case, Metrowerks has not yet released the WinCE
support modules, which were supposed to be ready last month, and there is no
news. Consequently, everybody waits. Hopefully the port from WinAPRS to WinCE
will be smooth, but even with that it is still going to take some time to do.

  ...mike/N0QBF
     71301.3106@compuserve.com

229. Re: [APRSSIG:26071] WX - millibars vs. Inches

From: Mark Sproul <msproul@ap.org>
Date: Wed, 08 Jul 1998 13:11:09 -0400
To: projunltd@compuserve.com, aprssig@tapr.org
Message-ID: <v03110705b1c958507816@[165.1.27.20]>
Rendered body type: text/plain

At 12:49 PM -0400 7/8/98, Mark Oppenheim wrote:
>No where in the message did I infer that millibars wasn't needed.
>
>I also said that it would be nice if APRS programs could display in
>millibars/inches/Kpa - and secondary to that, changing the protocol (which
>I think would be detrimental to the slowly growing user base of overseas
>ops that are starting to make their own maps and use APRS) which of course,
>I don't think is in anyone's best intrest to do.
>

MacAPRS/WinAPRS will have the ability to DISPLAY in any format you like, I
am slowly adding this, I now have most of the miles/km done, I will be
working on the WX displays over the next month or 2

On AIR protocol will NOT change, reguardless of what mode and/or what
country you are in

Mark

_____
(please note email address change msproul@ap.org)
_____
Mark Sproul |Amateur Radio: KB2ICI
Software Engineer @ Assoc Press |
msproul@ap.org |Work: 609-860-7120
North Brunswick, NJ |Fax: 609-860-7129
http://msproul.rutgers.edu/
_____

230. the pressure display debate

From: "M.L. McCauley" <mtech@airmail.net>
Date: Wed, 08 Jul 98 12:33:08 --0600

To: APRS sig <aprssig@tapr.org>
Message-ID: <m0yty5K-000O1RE@mail.airmail.net>
Rendered body type: text/plain

-- [From: M.L. McCauley * EMC.Ver #3.1] --

WB5MYY in Dallas, TX checking in and casting a _strong_ vote in favor of user selectable millibars/inches/Kpa.

I think the metric system is great, but when I hear/see "28.85" I get an immediate mental picture containing useful information. When I hear/see 'X' millibars, I start going "well, lets see now, ah, thats, ah,...ah, how many inches is that?..."

231. (no subject)

From: Michael Nie <mnie@fuse.net>
Date: Wed, 8 Jul 1998 14:20:13 -0400
To: "'bruninga@nadn.navy.mil'" <bruninga@nadn.navy.mil>
Cc: "'aprssig@tapr.org'" <aprssig@tapr.org>
Message-ID: <01BDAA7B.874CD260.mnie@fuse.net>
Rendered body type: text/plain

>Date: Tue, 7 Jul 1998 14:24:06 -0400 (EDT)
>From: Bob Bruninga <bruninga@nadn.navy.mil>
>To: Wes Johnston <kd4rdb@eagnet.com>
>Subject: Re: aprs digi software
>Message-ID: <Pine.SOL.3.96.980707140420.25144F-100000@arctic>

<snip for brevity>

>NEW PHILOSOPHY: APRS network and digi owners are responsible to replace
>old WIDE digis with TRACE and or WIDEn-n digipeaters. Users are cautioned
>to use the minimum path necessary for their current application and not to
>flood the network except during special situations. Users are RESPONSIBLE
>for their own dupes. If they are causing excessive dupes, then they
>should modify their path accordingly...

Excuse me? Who made me RESPONSIBLE for this? I maintain two digis. One out of my own pocket, and the other belongs to a club I am a member of. I have already, at my own expense, converted my digi (KB8VMX-10) to 144.39 because everyone else decided we were changing frequency. The commercial radio I use just barely tunes up there. 145.79 was closer to the designed frequency. The radio ran for months with no trouble at the old frequency. Since the QSY, the PA has gone out twice. I am wondering if running the radio on the ragged edge of frequency response is responsible for the PA failures. It is now off the air awaiting reconstruction. Now I am left to buy a different radio. At Dayton, I bought the latest firmware for the TNC to make it more efficient.

The other digi, W8NWS in Downtown Cincinnati, uses equipment that is owned by the club that serves Skywarn functions. We use it to monitor the APRS weather stations around town. It sits high on a hill covering the downtown area that was not covered well before, because it sits in a "bowl". I was able to convince the club to allow its use as a digi since it would cost nothing. This station runs an old MFJ-1270 TNC. Am I to tell them that they have to buy (on a shoestring budget) a new TNC or firmware because someone made a proclamation from on high that they or I am RESPONSIBLE to do so? I'm not going to pay for it out of my pocket because I don't own the equipment and my digi is costing me enough already.

I'm no martyr, since I'm sure other digi owners are in similar or worse positions. My point in this rather lengthy eMail is that you should be careful before making a pronouncement that digi owners are RESPONSIBLE to do anything that involves spending money you are not providing. The alternative is that we turn off the digis that don't meet current standards. Is that the answer?

Mike

232. Test Msg.

From: Cardwell H Smith <Cardwell.H.Smith@SAS02.usace.army.mil>
Date: 08 Jul 1998 18:48:35 Z
To: aprssig@tapr.org (Return requested)
Message-ID: <0651335A3BF03029*/c=us/admd=attmail/prmd=gov+usace/o=SAS02/ou=CESAS-EN-GG/s=Smith/g=Cardwell/i=H/@MHS>
Rendered body type: text/plain

This is a test.....

233. Re: [APRSSIG:26074] the pressure display debate

From: jack.lebreton@sympatico.ca
Date: Wed, 08 Jul 1998 15:05:35 -0600
To: aprssig@tapr.org
Message-ID: <199807081909.PAA26552@smtp13.bellglobal.com>
Rendered body type: text/plain

On 1998-07-08 someone said to APRSsig

>I think the metric system is great, but when I hear/see "28.85" I
>get an immediate mental picture containing useful information. When
>I hear/see 'X' millibars, I start going "well, lets see now, ah,
>thats, ah,...ah, how many inches is that?..."

COMMENT: The NUMBER itself is not important ! It's the
CHANGE from the last number recorded that is important
- a FALLING/RISING barometer is all one needs whether
that change is from 27.2 to 28.85 or
from 997.1 to 1009.5
- none of these numbers correlate, yet I know that the
barometer is RISING (improving weather ahead).

My $.02 worth, at least.
73 de Jack VA3JAX

Annabelle and Jack LeBreton -- please reply to va3jax@torfree.net
---

Net-Tamer V 1.09.2 - Test Drive

234. Re: [APRSSIG:26068] Re: 440 Freq?

From: Byron Smith <wa6ylb@theworks.com>
Date: Wed, 08 Jul 1998 12:35:10
To: ddoulou@gte.net
Cc: aprssig@tapr.org
Message-ID: <3.0.1.16.19980708123510.0f2790d4@theworks.com>
Rendered body type: text/plain

At 09:49 AM 7/8/98 -0500, you wrote:
>How about having the software recognize that it did not get digied and then
>continue to try in 1 minute intervals until it sees the packet digied, then
>reset back to 30 minutes.

I agree. I've gotten frustrated in doing Querys, only to fill out the lines
and hit return, just to have my out going packet get clobbered. Then you
redo it over again. At least messages will recycle. Would be nice for
querys and other such related
data requests / transfers to recycle like messages do.

Byron Smith
wa6ylb@theworks.com - Website: theworks.com/~wa6ylb
wa6ylb@wa6ylb.#cca.ca.usa.noam

If a turtle doesn't have a shell, is he homeless or naked?

235. Re: [APRSSIG:26070] Re: Southern CA WIDE WIDE WIDE

From: Byron Smith <wa6ylb@theworks.com>
Date: Wed, 08 Jul 1998 12:38:57
To: n3eop@hotmail.com
Cc: aprssig@tapr.org, aprs@lists.monterey.edu
Message-ID: <3.0.1.16.19980708123857.3da7ec2e@theworks.com>
Rendered body type: text/plain

No. the only thing APRS flavored (as far as digis go) is the Paccomm TNC200
firmware (version 5.0.0 is latest). It allows callsign subs for alias, and
watches for dupes, but doesnt do wide N. Problem with TNC2 hardware vs
Kantronics is
the amount of EPROM room to put these features in. Sure it can be done in a
TNC2. But what do you give up in the tnc2 features?

The KPC3 et al have 64K (27512 eprom) to play in, vs 32K for a tnc2.
I do have settings on my web page for using this Paccomm software.

At 10:22 AM 7/8/98 -0500, you wrote:
>On Tue, 7 Jul 1998 20:55:32 -0500 (CDT), Sir Bob thus spoke:
>

>>If they were all WIDEn-n digis, then one would only need to use the
>>path of WIDE2-2 to go out the same number of hops,
>
>So whose TNCs support the WIDEn-n protocol? (And is it available for an
>old MFJ?)
>
>_____
>Get Your Private, Free Email at http://www.hotmail.com
>
>
Byron Smith
wa6ylb@theworks.com - Website: theworks.com/~wa6ylb
wa6ylb@wa6ylb.#cca.ca.usa.noam

If a turtle doesn't have a shell, is he homeless or naked?

236. Weather PIC Web Site

From: Steve Dimse K4HG <k4hg@tapr.org>
Date: Wed, 8 Jul 1998 16:04:31 -0400
To: "aprssig" <aprssig@tapr.org>
Message-ID: <199807082004.PAA23554@tapr.org>
Rendered body type: text/plain

Thanks to all those who emailed me about the Weather PIC. There have been
too many to respond to all individually, so I have started a web page to
cover the project. There are pictures of my protype, the schematic, and
answers to most of the questions people have asked about the project,
including its potential usefulness for the Radio Shack weather station
(yes) and the U-II (no).

http://www.aprs.net/wx-pic.html

Steve K4HG

237. Re: [APRSSIG:26071] WX - millibars vs. Inches

From: "Paul Christenson" <n3eop@hotmail.com>
Date: Wed, 08 Jul 1998 13:53:05 PDT
To: aprssig@tapr.org
Message-ID: <19980708205306.4663.qmail@hotmail.com>
Rendered body type: text/plain

>Unfortunately, feet and inches are going to be around for a long
>time, mainly because the worldwide aviation world has adopted it, and
>if you need more reinforcement that the industry moves to change
>slowly - consider the fact that all their VHF comminicatons are still
>using AM :-)

There is a reason they don't use FM... capture effect.

Say a downed plane is calling for help. If FM was used, the local
tower, other planes, etc. would all be stronger than the downed plane.
Using AM, a hetrodyne would still be audible, if not the voice itself.

_____
Get Your Private, Free Email at http://www.hotmail.com

238. RE: [APRSSIG:26077] Re: the pressure display debate

From: "Demos Doulou" <ddoulou@gte.net>
Date: Wed, 8 Jul 1998 15:19:33 -0400
To: <jack.lebreton@sympatico.ca>, <aprssig@tapr.org>
Message-ID: <003801bdaaa5$56a7b880$05f3ffd0@wingate>
Rendered body type: text/plain

Not when the NWS and Hurricane center is concerned. I stayed up all through
the night once when we had a hurricane in the neighborhood providing them
with hourly reports of wind speed/direction and the most important, to them,
Barometric pressure in MILLIBARS as they requested.

73

Demos Doulou KR4US
Pinellas Cty, Florida
 ACS Radio Officer
kr4us@amsat.org
ddoulou@gte.net

> -----Original Message-----

> From: aprssig@tapr.org [mailto:aprssig@tapr.org]On Behalf Of
> jack.lebreton@sympatico.ca
> COMMENT: The NUMBER itself is not important ! It's the
>   CHANGE from the last number recorded that is important
>   - a FALLING/RISING barometer is all one needs whether
>   that change is from 27.2 to 28.85 or
>   from 997.1 to 1009.5
>

239. DEMs + SA = TOPO!

From: Arte Booten <n2zrc@webspan.net>
Date: Wed, 08 Jul 1998 17:42:03 -0400
To: APRS SIG <aprssig@tapr.org>
Message-ID: <35A3E7AA.30B85CAB@webspan.net>
Rendered body type: text/plain

Hi all (particularly Keith, Mark & Brent),

     I decided to drop into Eastern Mountain Sports today, just to look around, and ran across something VERY interesting ... particularly for the Search-and-Rescue types. It's one of a series of CD's that are the data equivalent of USGS 7 1/2 minute quads. I just played with it for about five minutes, and it's like looking at one of those big sheets of paper on the monitor. But instead of squinting and reaching for a magnifying glass, you can zoom in. You can draw routes. You can create elevation cross-sections of the terrain. But the version I have doesn't YET support GPS ... although they seem to want to (they ask you to mention if you're intersted in GPS on the registration card).

     I've got the one for NYC/Long Island/Northern NJ/The Catskills & The Poconos (on 2 CD's). Other areas covered by other sets are:

CALIFORNIA:
     San Francisco Bay Area, Wine Country & Big Sur
     Los Angeles, Santa Barbara & surrounding recreational areas
     San Diego, San Jacinto Wilderness & Anza-Borrego Desert areas
     Lake Tahoe & surrounding Wilderness & Ski areas
     Yosemite, Mammoth and Central Sierras Wilderness areas
     Sequoia, Kings Canyon & surrounding Wilderness areas
     Death Valley, Joshua Tree & East Mojave Desert areas

WASHINGTON:
     Seattle, Mt. Rainier & Central Cascades areas
     Olympic Peninsula, San Juan Islands & Puget Sound areas

COLORADO:
     Front Range Cities & Recreational areas
     Rocky Mountain Wilderness & Ski areas

MINNESOTA:
     Boundary Waters, Western Lake Superior & Twin Cities areas

NEW ENGLAND:
     Greater Boston, Cape Cod & Rhode Island areas
     New Hampshire & The White Mountains
     Connecticut, Berkshires & Southern Green Mountains

This listing was presumably made when the product shipped, and they may well have many more areas by now. They also seem to have a website at:

     http://www.topo.com

so you can look up to see if YOUR area is covered ... and if there's an upgrade/patch to allow us to use GPS.

     Just thought you might like to know about this. I see no reason why these maps couldn't be saved as a bitmap, then calibrated for use with APRS+ (oh, it gives you the option of using NAD27 or NAD83!). 73
--
Arte Booten <n2zrc@webspan.net> EC/RO for Bronx County, NYC ARES/RACES
PGP Key Fingerprint: 22E5 3EC7 4E3C 2460 C570 BACA E48B 71D5 0F33 54AD
Riverdale, NY [FN30bu]   Cruise Missile Coordinates: 4052.71N/07354.06W
    TM-V7a/KPC-3 6.0/GPS-III Packet: N2ZRC@KB2VLX.#BRONX.NY.USA.NA

   "There is an undetonated Chroniton Torpedo lodged in the hull."
   "Do not attempt to disarm it until I arrive." "Arrive quickly!"
      -Seven of Nine & Tuvok, Star Trek: Voyager; "Year of Hell"

240. Re: [APRSSIG:26083] DEMs + SA = TOPO!

From: "Randolph L. Hammock" <Randy.Hammock@jpl.nasa.gov>
Date: Wed, 08 Jul 1998 15:32:50 -0700
To: APRSSIG <aprssig@tapr.org>
Message-ID: <35A3F391.406290EF@jpl.nasa.gov>
Rendered body type: text/plain

Arte Booten wrote:
>
> the Search-and-Rescue types. It's one of a series of CD's that
> are the data equivalent of USGS 7 1/2 minute quads. I just
> played with it for about five minutes, and it's like looking at
> one of those big sheets of paper on the monitor. But instead of
> squinting and reaching for a magnifying glass, you can zoom in.
> You can draw routes. You can create elevation cross-sections of
> the terrain. But the version I have doesn't YET support GPS ...
> although they seem to want to (they ask you to mention if you're
> intersted in GPS on the registration card).

I have the Los Angeles, San Diego and Yosemite Topo! sets. I volunteered to to GPS beta testing for them but they turned me down. They hope to have the GPS version available real soon.

Their maps appear to be pretty good; however, you can tell where the map pieces were spliced together. There are some discontinuities where different maps were connected. It would really be neat if they could use the DRG CD set from the USGS. It would be curious to see how they would get those pasted together. The printed map results are pretty good, too.

If you do some shopping around, you can get Topo! at a good price. I recall the list price being about $50 but I paid $35 per set at Fry's. Quite a difference.

--
Randy Hammock KC6HUR | Jet Propulsion Laboratory
mailto:Randy.Hammock@jpl.nasa.gov | M/S: 301-270
 Voice: +1-818-354-7143 | 4800 Oak Grove Drive
  | PASADENA CA 91109

241. Re: [APRSSIG:26081] Re: WX - millibars vs. Inches

From: "Buck" <kc4gck@stc.net>
Date: Wed, 8 Jul 1998 18:39:16 -0400
To: <n3eop@hotmail.com>, <aprssig@tapr.org>
Message-ID: <199807082241.SAA11336@atl1.america.net>
Rendered body type: text/plain

Yeah, that's just why the elt came along. Also, has anyone bothered to consider the *much better* fidelity of AM vs FM?? It just might lead to less problems (traced to a poor *AM* communications channel). Nope, the real reason they are still using AM is that it's too expensive to reequip the worldwide fleet.

> From: Paul Christenson <n3eop@hotmail.com>
> To: aprssig@tapr.org
> Subject: [APRSSIG:26081] Re: WX - millibars vs. Inches
> Date: Wednesday, July 08, 1998 16:57 PM
>
> >Unfortunately, feet and inches are going to be around for a long
> >time, mainly because the worldwide aviation world has adopted it, and
> >if you need more reinforcement that the industry moves to change
> >slowly - consider the fact that all their VHF comminicatons are still
> >using AM :-)
>
> There is a reason they don't use FM... capture effect.
>
> Say a downed plane is calling for help. If FM was used, the local
> tower, other planes, etc. would all be stronger than the downed plane.
> Using AM, a hetrodyne would still be audible, if not the voice itself.
>
> _____
> Get Your Private, Free Email at http://www.hotmail.com

242. Re: [APRSSIG:26085] Re: WX - millibars vs. Inches

From: Ralph Fowler <rwf@BSRG.org>
Date: Wed, 08 Jul 1998 19:25:13 -0400
To: aprssig@tapr.org
Message-ID: <199807082358.TAA12289@cocacola-bh.cokecce.com>

Rendered body type: text/plain

Good try, but how will they squeeze 720 FM channels into that 18 MHz of
space they have from 118-136? Maybe they could add in 144-148 MHz too so
they can have enough to use FM.

At 05:43 PM 7/8/98 -0500, you wrote:
 Nope, the
>real reason they are still using AM is that it's too expensive to reequip
>the worldwide fleet.

243. Prince Georges BC

From: Bob Bruninga <bruninga@nadn.navy.mil>
Date: Wed, 8 Jul 1998 20:43:21 -0400 (EDT)
To: aprssig@tapr.org
Message-ID: <Pine.SOL.3.96.980708204207.1782B-100000@arctic>
Rendered body type: text/plain

I just completed digitizing a series of maps for Prince Georges British
Columbia. THey are in a new NWmaps22.zip just posted

de WB4APR, Bob

244. RE: [APRSSIG:26063] Re: 440 Freq?

From: Bob Bruninga <bruninga@nadn.navy.mil>
Date: Wed, 8 Jul 1998 20:47:03 -0400 (EDT)
To: Demos Doulou <ddoulou@gte.net>
Cc: aprssig@tapr.org
Message-ID: <Pine.SOL.3.96.980708204358.1782C-100000@arctic>
Rendered body type: text/plain

NO can do. You cannot add autmoatic retries to an APRS network because

That is exactly what causes melt down on a CSMA network. The reuslt is
that nothing gets through once you exceed the optimum of 36%. THe
throughput decays to zero as you have 100% retries and colisions.

APRS avoids that by NOT retrying as in conventional packet. That is its
one big advantage over conventional packet as it degrades gracefully.
Those people with HIGH priority traffic can hit XMT as needed if they must
get through...

 On Wed, 8 Jul 1998, Demos Doulou wrote:

> How about having the software recognize that it did not get digied and then
> continue to try in 1 minute intervals until it sees the packet digied, then
> reset back to 30 minutes.
>
> 73
>
> Demos Doulou KR4US
> Pinellas Cty, Florida
> ACS Radio Officer
> kr4us@amsat.org
> ddoulou@gte.net
>
>
> > -----Original Message-----
> > From: aprssig@tapr.org [mailto:aprssig@tapr.org]On Behalf Of Bob
> >
> > > Isn't the beauty of UI Frames that if a packet gets missed it
> > will be picked
> > > up later?
> >
> > Has nothing to do with UI frames. And since FIXED APRS stations only
> > transmit once every 30 minutes, a single missed packet leaves that person
> > out of the net for 30 miuntes. A LONG time in the real-world...
> >
> >
>
>

APRSdos REPLY/COMMENT:

Reply mail addr: wb4apr@amsat.org
US mail address: 115 old Farm Ct, Glen Burnie, MD 21060
See DAYTON97 HISTORY: http://web.usna.navy.mil/~bruninga/dayton.html
See Maryland APRS LIVE: http://web.usna.navy.mil/~bruninga/aprs.html

See GPS on ANY radio: http://www.tapr.org/tapr/html/mic-e.html

245. Re: DIGI Upgrades

From: Bob Bruninga <bruninga@nadn.navy.mil>
Date: Wed, 8 Jul 1998 21:01:25 -0400 (EDT)
To: Michael Nie <mnie@fuse.net>
Cc: aprssig@tapr.org
Message-ID: <Pine.SOL.3.96.980708205352.1782E-100000@arctic>
Rendered body type: text/plain

In response to some feedback regarding upgrading digis:

You will notice that my WB4APR-1 digi is also still an old WIDE.
It also will not get changed anytime soon. But eventually it should get
upgraded to WIDEn-n as should all APRS digipeaters to best serve their
users.

All I was saying was that APRSdos will no longer BEEP-and-BITCH every few
seconds every time some uses the WIDE,WIDE,WIDE path. THis is because, in
some areas that have upgraded their digis, this is a perfectly good path
now days. There is no reason to keep the irritating BEEP-n-BITCH warning
in APRSdos....

I did not mean to sound like I was placing a burden on you to upgrade your
digi, That is up to your users.....

On Wed, 8 Jul 1998, Michael Nie wrote:

> >NEW PHILOSOPHY: APRS network and digi owners are responsible to replace
> >old WIDE digis with TRACE and or WIDEn-n digipeaters....
>
> Excuse me? Who made me RESPONSIBLE for this? I maintain two digis. ...
> ..... Am I to tell them that they have to buy a new TNC or firmware
> because someone made a proclamation from on high that they or I am
> RESPONSIBLE to do so? I'm not going to pay for it out of my pocket
> because I don't own the equipment and my digi is costing me enough
> already.
>
> I'm no martyr, since I'm sure other digi owners are in similar or worse
> positions. My point in this rather lengthy eMail is that you should be
> careful before making a pronouncement that digi owners are RESPONSIBLE to
> do anything that involves spending money you are not providing. The
> alternative is that we turn off the digis that don't meet current
> standards. Is that the answer?
>
> Mike
>
>

APRSdos REPLY/COMMENT:

Reply mail addr: wb4apr@amsat.org
US mail address: 115 old Farm Ct, Glen Burnie, MD 21060
See DAYTON97 HISTORY: http://web.usna.navy.mil/~bruninga/dayton.html
See Maryland APRS LIVE: http://web.usna.navy.mil/~bruninga/aprs.html
See GPS on ANY radio: http://www.tapr.org/tapr/html/mic-e.html

246. RE: [APRSSIG:26061] Re: Precision Mapping CD

From: "Harry Burford" <hburford@airmail.net>
Date: Wed, 8 Jul 1998 20:11:41 -0500
To: <aprssig@tapr.org>
Message-ID: <000201bdaad6$87a06140$716f6f6f@harryport>
Rendered body type: text/plain

I ordered a copy from Mark a month ago and haven't received it yet. The $43
price is the price he gave me including the shipping. Shortly after sending
my order, I received a direct mail ad from Chicago Map offering the
Precision Map 3.0 for $20. Still holding for the Sproul order as I don't
really need 2 copies of the software.

Hb

-----Original Message-----
From: aprssig@tapr.org [mailto:aprssig@tapr.org] On Behalf Of William Owens
Sent: Wednesday, July 08, 1998 8:22 AM
To: aprssig@tapr.org
Subject: [APRSSIG:26061] Re: Precision Mapping CD

Mark Fellhauer wrote:

> Where's the best place to get the PM CD ROM? Are the Sprouls carrying it?
>

Yes they were, $43.00 for the CD.

247. Re: [APRSSIG:26063] Retries

From: Bob Bruninga <bruninga@nadn.navy.mil>
Date: Wed, 8 Jul 1998 21:16:33 -0400 (EDT)
To: "Gregory \"Lin\" Holcomb Jr." <glfh@localone.net>
Cc: aprssig@tapr.org
Message-ID: <Pine.SOL.3.96.980708211233.1782N-100000@arctic>
Rendered body type: text/plain

On Wed, 8 Jul 1998, Gregory "Lin" Holcomb Jr. wrote:

> So if a packet is not digied aprs will not try again? Humm guess I was
> misinformed.

It will try again and forever... but at the usual decaying rate. APRSdos transmits imediately when new data is entered. Then again 8 seconds later, then 16 seconds, then 30, then 1 minute, 2 minutes, 4 minutes, 8 minutes, 16 minutes and then every 30 minutes for ever...

Mac/Win only transmit every 30 minutes or so and do not do the decaying process. that is why they take so long to see new data if there is a collision.

bob

 > 73 Lin
> >Has nothing to do with UI frames. And since FIXED APRS stations only
> >transmit once every 30 minutes, a single missed packet leaves that person
> >out of the net for 30 minutes. A LONG time in the real-world...
>
> -----Original Message-----
> From: Bob Bruninga <bruninga@nadn.navy.mil>
> To: aprssig@tapr.org <aprssig@tapr.org>
> Date: Wednesday, July 08, 1998 10:43 AM
> Subject: [APRSSIG:26063] Re: 440 Freq?
>
>
> >On Wed, 8 Jul 1998, Gregory "Lin" Holcomb Jr. wrote:
> >
> >> Isn't the beauty of UI Frames that if a packet gets missed it will be
> picked
> >> up later?
> >
> >Has nothing to do with UI frames. And since FIXED APRS stations only
> >transmit once every 30 minutes, a single missed packet leaves that person
> >out of the net for 30 miuntes. A LONG time in the real-world...
> >>
> >> Wouldn't this allow for an over loaded frequency to still pass
> >> communications, Even if the channel load was, lets say 125%.
> >
> >Fundamental theory for an ALOHA channel like APRS is that maximum
> >throughput occurs when the channel is less than 18% busy!
> >
> >> I know that
> >> there would be a point at which it could become a problem (major delays)
> But
> >> your aprs station is going to know that it was not digied and try again
> >> after a while.
> >
> >NO, APRS does not know it had a collision. If a packet is lost, it is
> >lost forever.
> >
> >
>
>

APRSdos REPLY/COMMENT:

Reply mail addr: wb4apr@amsat.org
US mail address: 115 old Farm Ct, Glen Burnie, MD 21060

```
See DAYTON97 HISTORY:    http://web.usna.navy.mil/~bruninga/dayton.html
See Maryland APRS LIVE:  http://web.usna.navy.mil/~bruninga/aprs.html
See GPS on ANY radio:    http://www.tapr.org/tapr/html/mic-e.html
```

248. Re: [APRSSIG:26050] Peet Bros Problem

```
From: "Kurt O. Jauss" <kf6hjo@lightspeed.net>
Date: Wed, 08 Jul 1998 18:22:36 -0700
To: casey@acm.org
Cc: aprssig@tapr.org
Message-ID: <35A41B5C.AFA52483@lightspeed.net>
Rendered body type: text/plain
```

Call the PEET Co. and tell them the problem. I had had a few
problems with my U2k and even after the warranty was up they serviced it
with no hassle. (the problems I may have caused myself. Trying to split
the data output to two PCs)

        Good luck.

Rich Casey wrote:

> Speaking of Peet Brothers, my wired .1 rain gauge has stopped taking
> readings after less than 18 months of operation. I can't see anything
>
> physically wrong with it, have exercised it a bit, but can't get it to
> come
> back to life. Any troubleshooting ideas before I break down and open
> my
> wallet for new one?
>
> Rich
> Rich Casey, Dallas TX | Amateur Radio N5CSU
> casey@acm.org | http://www.startext.net/homes/rcasey
>   --- Think globally, connect locally ---

```
--
  Kurt O. Jauss
     kf6hjo@lightspeed.net
             3631.12N  11940.52W     144.39Mhz
    Selma Ca. {APRS Weather & GPS Traker}
```

249. 818

```
From: Bob Bruninga <bruninga@nadn.navy.mil>
Date: Wed, 8 Jul 1998 21:37:10 -0400 (EDT)
To: aprssig@tapr.org
Message-ID: <Pine.SOL.3.96.980708212919.3663A-100000@arctic>
Rendered body type: text/plain
```

I just posted a new APRS818 and also just an APRS818.exe. it is called
818exe.zip.

It incorportes some lessons learned while doing a 1600 mile trip with my
old 286 laptop. Nothing much else changed..

Fixed MAPS-pLOTS-RANGE crash
READ-WHEN command shows how long till next message transmsission
XMT-MSG now lets you select which line to send
MAPS-OVERLAYS-OTHER now will redraw the map

     I used the MAPS-OVERLAYS-OTHER-2M-VOICE file to see where all the
     local 2m repeaters were along the route.

THis was great for me, since I put them on there last year. But so far,
no one has sent me any other WIDE AREA VOICE 2m repeaters for travelers.
I only want to list very wide coverage and very talkitive repeaters...
only those that are useful for travelers...

As you can guess, we cannot possibly put all 2m voice repeaters in that
file, but it should contain ONE wide area voice repeater for most areas of
the country...

250. Re: [APRSSIG:26088] Re: 440 Freq?

```
From: "Gregory \"Lin\" Holcomb Jr." <glfh@localone.net>
Date: Wed, 8 Jul 1998 22:00:31 -0400
To: <bruninga@nadn.navy.mil>, <aprssig@tapr.org>
Message-ID: <012401bdaadd$5b66ccc0$cb062299@n4yci>
```

Rendered body type: text/plain

I See ,
So in summery,
the 100% loading = 36% actual loading. (The real highest loading rate for
APRS to be efficient) Right ?
Aprsdos decays its transmit rate. WinAPRS, MacAPRS TX every 30min.
So how many stations within a network would relay equate to 95% channel
loading
Assuming nobody is via wide,wide,wide and uses wide,wide ?
How many stations can be on a APRS network and that network still work?
73 Lin
N4YCI

-----Original Message-----
From: Bob Bruninga <bruninga@nadn.navy.mil>
To: aprssig@tapr.org <aprssig@tapr.org>
Date: Wednesday, July 08, 1998 9:30 PM
Subject: [APRSSIG:26088] Re: 440 Freq?

>NO can do. You cannot add autmoatic retries to an APRS network because
>
>That is exactly what causes melt down on a CSMA network. The reuslt is
>that nothing gets through once you exceed the optimum of 36%. THe
>throughput decays to zero as you have 100% retries and colisions.
>
>APRS avoids that by NOT retrying as in conventional packet. That is its
>one big advantage over conventional packet as it degrades gracefully.
>Those people with HIGH priority traffic can hit XMT as needed if they must
>get through...
>
> On Wed, 8 Jul 1998, Demos Doulou wrote:
>
>> How about having the software recognize that it did not get digied and
then
>> continue to try in 1 minute intervals until it sees the packet digied,
then
>> reset back to 30 minutes.
>>
>> 73
>>
>> Demos Doulou KR4US
>> Pinellas Cty, Florida
>> ACS Radio Officer
>> kr4us@amsat.org
>> ddoulou@gte.net
>>
>>
>> > -----Original Message-----
>> > From: aprssig@tapr.org [mailto:aprssig@tapr.org]On Behalf Of Bob
>> >
>> > > Isn't the beauty of UI Frames that if a packet gets missed it
>> > will be picked
>> > > up later?
>> >
>> > Has nothing to do with UI frames. And since FIXED APRS stations only
>> > transmit once every 30 minutes, a single missed packet leaves that
person
>> > out of the net for 30 miuntes. A LONG time in the real-world...
>> >
>> >
>>
>>
>
>APRSdos REPLY/COMMENT:
>
>Reply mail addr: wb4apr@amsat.org
>US mail address: 115 old Farm Ct, Glen Burnie, MD 21060
>See DAYTON97 HISTORY: http://web.usna.navy.mil/~bruninga/dayton.html
>See Maryland APRS LIVE: http://web.usna.navy.mil/~bruninga/aprs.html
>See GPS on ANY radio: http://www.tapr.org/tapr/html/mic-e.html
>
>

251. Re: [APRSSIG:26083] DEMs + SA = TOPO!

From: kd4emi@juno.com (Michael A Kantor)
Date: Wed, 8 Jul 1998 22:40:23 -0400

To: n2zrc@webspan.net
Cc: aprssig@tapr.org
Message-ID: <19980708.224024.3358.0.kd4emi@juno.com>
Rendered body type: text/plain

Within a couple of weeks you can buy topo maps that will work with APRSA
and have street data even on them..

I would advise anyone about to get topo software to wait a couple of
weeks...
(and it will work with palm pilot and CE machine)
(and will be GPS compatable for those devices)

Mike KD4EMI@JUNO.COM

_____
You don't need to buy Internet access to use free Internet e-mail.
Get completely free e-mail from Juno at http://www.juno.com
Or call Juno at (800) 654-JUNO [654-5866]

252. RE: DIGI Upgrades

From: Michael Nie <mnie@fuse.net>
Date: Wed, 8 Jul 1998 23:38:19 -0400
To: "'Bob Bruninga'" <bruninga@nadn.navy.mil>
Cc: "aprssig@tapr.org" <aprssig@tapr.org>
Message-ID: <01BDAAC9.7CB49600.mnie@fuse.net>
Rendered body type: text/plain

I am all for keeping the network improving. It just sounds like a very
strong statement when the "Father of APRS" says that digi owners and users
are responsible to upgrade to the latest firmware. I would like nothing
better than to have the latest and best of everything to work with. There
is not a lot of support (financially) in this area. The digi's are
maintained by individuals. The gate is maintained by an individual. And,
so it goes.

It must be awful to have to watch every phrase that leaves your keyboard!
  :-)

Mike

On Wednesday, July 8, 1998 9:01 PM, Bob Bruninga
[SMTP:bruninga@nadn.navy.mil] wrote:
> In response to some feedback regarding upgrading digis:
>
> You will notice that my WB4APR-1 digi is also still an old WIDE.
> It also will not get changed anytime soon. But eventually it should get
> upgraded to WIDEn-n as should all APRS digipeaters to best serve their
> users.
>
> All I was saying was that APRSdos will no longer BEEP-and-BITCH every few
> seconds every time some uses the WIDE,WIDE,WIDE path. THis is because,
in
> some areas that have upgraded their digis, this is a perfectly good path
> now days. There is no reason to keep the irritating BEEP-n-BITCH warning
> in APRSdos....
>
> I did not mean to sound like I was placing a burden on you to upgrade
your
> digi, That is up to your users.....
>
> --
>

253. Re: [APRSSIG:26043] Re: 440 Freq?

From: "9-0043gz^Zh4/0" <rocketman@basinlink.com>
Date: Wed, 8 Jul 1998 22:59:12 -0600
To: rbost@itexas.net, aprssig@tapr.org
Message-ID: <B0000590911@usamail.texasonline.net>
Rendered body type: text/plain

>Reply-to: rbost@itexas.net

(snip)

>   I have been approached by some of the 441 packet guys about APRS. They
>wanted to use their 441 rigs and not have to invest in 2m rigs. I have a
>KPC-4 and my 440 packet radio, so I thought a 2m - 440 gate would be a fun

>project! I have not gotten a reply (as of yet) from the TPRS 440
>coordinator about a frequency to use so I'll probably either use 441.050 or
>the 445.925 simplex frequency.

I happen to have a number of data radios in the 450-470 mhz band from scrapped out SCADA systems that I would like to re-crystal to 70cm to make really low cost trackers. So I'm interested in it too.

>   Let's keep this discussion going! We need look to the future. APRS on
>144.39 will reach saturation in many areas soon. There is plenty of
>bandwidth available on 440, we just need to find a spot!

Amen to that! I have had my scanner sweeping from 420 to 450 mhz for weeks and heard nothing but 1) silence, and 2) exactly one repeater.

If there's a lot of spectrum ALLOCATED for something else, no one around here seems to be actually using it. I have yet to hear a packet burst on the 70cm band that was one I didn't generate myself.

Since crystals are rather expensive, I'd like to have the frequency for 70cm resolved before spending the bucks to build up the trackers.

Maybe I ought to park the FT-470 handie on 441.050 or 445.925 and let it just beacon slowly for a few days and see if anyone actually connects, answers, or complains?

Any specific frequencies to program into the scanner to make a tighter (and more hits per channel per minute) search for activity? Stick with the simplex band to listen?

 >Roy W Bost
>N5TAM
>rbost@itexas.net

-73- de N5PSP - Alton

"We hold these truths to be self-evident, that all men are created
equal; that they are endowed by their Creator with certain
unalienable rights, and among them are Life, Liberty, and the Pursuit
of Happiness."

254. [APRSSIG:26081] Re: WX - millibars vs. Inches

From: Mark Oppenheim <projunltd@compuserve.com>
Date: Thu, 9 Jul 1998 00:01:08 -0400
To: "INTERNET:n3eop@hotmail.com" <n3eop@hotmail.com>
Cc: APRS-USA <aprssig@tapr.org>
Message-ID: <199807090001_MC2-529A-8954@compuserve.com>
Rendered body type: text/plain

N3EOP wrote:
>There is a reason they don't use FM... capture effect.

>Say a downed plane is calling for help. If FM was used, the local
tower, other planes, etc. would all be stronger than the downed plane.
Using AM, a hetrodyne would still be audible, if not the voice itself.

WRONG.

The AM issue is NOT hetrodynes, as anyone that has heard a AM transmitter's PTT get stuck on an airplane's radio will attest... it makes the channel near-useless, and is MUCH more dangerous than not hearing "doubles" on a channel.

I stand by my original statement.

-Mark

255. unsubscribe

From: Matthew Stennett <msandss@po.jah.or.jp>
Date: Thu, 9 Jul 1998 12:23:05 +0900
To: APRS SIG <aprssig@tapr.org>
Message-ID: <l03130300b1c9e8078c85@[210.162.3.249]>
Rendered body type: text/plain

[Empty message body]

256. pico/kenwood TM-V7

From: "joyce phillips" <mitzie46@hotmail.com>
Date: Thu, 09 Jul 1998 03:56:25 PDT
To: aprssig@tapr.org
Message-ID: <19980709105625.3424.qmail@hotmail.com>
Rendered body type: text/plain

member #7030. can someone help me with setting up a aprs station?Iam having trouble making my station work properly.Need help pico with built in gps hooked up toKenwood TM-V7.Problem is the wiring in the kenwood book is not clear. Would appreciate hearing from anyone that has this equipment on line. Thanks James Phillips KF4ETX

_____
Get Your Private, Free Email at http://www.hotmail.com

257. Re: [APRSSIG:26096] RE: DIGI Upgrades

From: "schiers" <schiers@netins.net>
Date: Thu, 9 Jul 1998 07:03:36 -0500
To: <mnie@fuse.net>
Cc: "APRS Sig" <aprssig@tapr.org>
Message-ID: <021a01bdab31$9b77aa60$8b178ea7@schiers.netins.net>
Rendered body type: text/plain

<vent on>

Lighten up guys! Bob has plainly stated that his wording referred to the auto nag feature of his software being eliminated so the program would no longer treat the user as a miscreant when he had multiple wides in the path. The point about digi owners upgrading their software was a simple statement of fact...not an order to do so. (As if somehow Bob could order such a thing.)

Does he recommend it? Sure....and he should.

I swear there must be a bunch of people sitting over keyboards with too much time on their hands, waiting to find something to be offended about or to take "strong" issue with. (Witness the interminable 'discussion' about "CONCERNS", defense if not outright worship of the metric system and vice versa.)

Am I the only one that sees this perseveration on a topic as bordering on the obsessive? Does someone issue gold stars to the "gotcha" people.

Gee, this sounds like fun:

Let's take every topic, beat it to death with nit picking, self-righteous proclamations of experience and expertise, cite every institution in the country as supporting "our" view of things (and everyone else's as stone-age or moronic) and as a result get that warm fuzzy feeling of self-satisfaction that we "set them straight".

After all....being 'right' and lavishly demonstrating same in front of God and the SIG is VERY IMPORTANT. (Certainly more important than civility, remaining calm and treating others and their positions with the modicum of respect they deserve.)

<vent and hyperbole engine off>

hasan schiers

N0AN
-----Original Message-----
From: Michael Nie <mnie@fuse.net>
To: aprssig@tapr.org <aprssig@tapr.org>
Date: Wednesday, July 08, 1998 10:52 PM
Subject: [APRSSIG:26096] RE: DIGI Upgrades

>I am all for keeping the network improving. It just sounds like a very
>strong statement when the "Father of APRS" says that digi owners and users
>are responsible to upgrade to the latest firmware. I would like nothing
>better than to have the latest and best of everything to work with. There
>is not a lot of support (financially) in this area. The digi's are
>maintained by individuals. The gate is maintained by an individual. And,
>so it goes.
>
>It must be awful to have to watch every phrase that leaves your keyboard!
> :-)
>

>Mike
>
>On Wednesday, July 8, 1998 9:01 PM, Bob Bruninga
>[SMTP:bruninga@nadn.navy.mil] wrote:
>> In response to some feedback regarding upgrading digis:
>>
>> You will notice that my WB4APR-1 digi is also still an old WIDE.
>> It also will not get changed anytime soon. But eventually it should get
>> upgraded to WIDEn-n as should all APRS digipeaters to best serve their
>> users.
>>
>> All I was saying was that APRSdos will no longer BEEP-and-BITCH every few
>> seconds every time some uses the WIDE,WIDE,WIDE path. THis is because,
>in
>> some areas that have upgraded their digis, this is a perfectly good path
>> now days. There is no reason to keep the irritating BEEP-n-BITCH warning
>> in APRSdos....
>>
>> I did not mean to sound like I was placing a burden on you to upgrade
>your
>> digi, That is up to your users.....
>>
>> --
>>
>

258. APRS With topographic maps?

From: "pmarkham" <pmarkham@newsguy.com>
Date: Thu, 9 Jul 1998 08:03:05 -0400
To: aprssig@tapr.org
Message-ID: <199807091211.FAA07361@newsguy.com>
Rendered body type: text/plain

I have been looking at some alternatives to Bob's compact DOS APRS.
I want a desktop operation that includes access to topographic CD
maps. I have noticed some intermittent discussion of the potential?
availability of CD topographic maps that may work with other variants
of APRS. As a recent owner of SA5 I felt compelled to give Brent's
APRS+SA5 a whirl and now have that "I wanna" desease after being
wowed by the neat interface of APRS and CD data he has built.

  What variants of APRS use or will use topographic CD maps? What
manufacturer's products will they use? Are CD topographic map sets
availble, now, at reasonable prices similar to Street Atlas, etc.? If
so, what are they and where can they be viewed on the WWW?

  URL references would be appreciated.

                                Tnx,
                                      Pete/wa4hei

PS. The US and dx heard on 17m with a simple antenna, including
Japan, is quite remarkable, yet the activity compared to 30m is
extremely sparse and scattered. It would be a treat for the few die
hard 17m APRS weenies to see some APRS dx and some overall increase
in 17m APRS activity.

   It takes a critical mass of activity to make 17m active and
interesting. The band is not as stable and predictable as 30m but it
has better signal to noise ratios, lower path loss, more efficient
mobile operation, better dx potential, less qrm and qrn, smaller
antenna requirements, blah, blah, blah... AND... it will get better
as the "spots" increase.

   Hope to see you.

 APRS 18,107,700 Hz mark, 1300-0200 UTC

259. Doppler systems doppler

From: "John Munsey, KB3GK" <munseyj@worldnet.att.net>
Date: Thu, 09 Jul 1998 09:02:40 -0400
To: aprssig@tapr.org
Message-ID: <3.0.32.19980709090213.00686e14@postoffice.worldnet.att.net>
Rendered body type: text/plain

HELP !!!!

has anyone interfaced the Doppler Systems doppler and a GPS to APRS? I am
running VER 2.2.0.

There are several problems. First APRS only accepts the Agrelo doppler
data stream.. Dop Sys is different.

Second the Dop Sys is 300 baud and can only be modified up to 2400. The
GPS is at 4800 baud so if you use only one com port the doppler has to be
raised to 4800 baud.

Third is there a port adapter to combine the two signals and switch from
one to the other saw every 5- 10 seconds?

Thanks for any suggestions.
 My EMAIL is   munseyj@worldnet.att.net

John Munsey, KB3GK
Ormond Beach, Fl.
munseyj@worldnet.att.net

260. RE: [APRSSIG:26102] APRS With topographic maps?

From: George Kammerzell <GKammerzell@procard.com>
Date: Thu, 9 Jul 1998 07:08:16 -0600
To: "'pmarkham@newsguy.com'" <pmarkham@newsguy.com>
Cc: "'aprssig@tapr.org'" <aprssig@tapr.org>
Message-ID: <34DA22FA4520D111BCFF00A0C920127C4C3987@smtp.procard.com>
Rendered body type: text/plain

wildfire has their stuff foe some areas on CD called topo and the url is
WWW.topo.com, the bros sproul have made refference to a 'beta' of
winaprs that will use topo

On Thursday, July 09, 1998 6:56 AM, pmarkham [SMTP:pmarkham@newsguy.com]
wrote:
>
>   I have been looking at some alternatives to Bob's compact DOS APRS.
> I want a desktop operation that includes access to topographic CD
> maps. I have noticed some intermittent discussion of the potential?
> availability of CD topographic maps that may work with other variants
> of APRS. As a recent owner of SA5 I felt compelled to give Brent's
> APRS+SA5 a whirl and now have that "I wanna" desease after being
> wowed by the neat interface of APRS and CD data he has built.
>
>   What variants of APRS use or will use topographic CD maps? What
> manufacturer's products will they use? Are CD topographic map sets
> availble, now, at reasonable prices similar to Street Atlas, etc.? If
> so, what are they and where can they be viewed on the WWW?
>
>   URL references would be appreciated.
>
>   Tnx,
>   Pete/wa4hei
>
> PS. The US and dx heard on 17m with a simple antenna, including
> Japan, is quite remarkable, yet the activity compared to 30m is
> extremely sparse and scattered. It would be a treat for the few die
> hard 17m APRS weenies to see some APRS dx and some overall increase
> in 17m APRS activity.
>
>   It takes a critical mass of activity to make 17m active and
> interesting. The band is not as stable and predictable as 30m but it
> has better signal to noise ratios, lower path loss, more efficient
> mobile operation, better dx potential, less qrm and qrn, smaller
> antenna requirements, blah, blah, blah... AND... it will get better
> as the "spots" increase.
>
>   Hope to see you.
>
> APRS 18,107,700 Hz mark, 1300-0200 UTC

261. Dauphin DTR-1 Port.Pen computer?

From: Norm Kluever <norm.kluever@worldnet.att.net>
Date: Thu, 09 Jul 1998 08:55:05 -0500
To: aprssig@tapr.org
Message-ID: <3.0.3.32.19980709085505.006c8d84@postoffice.worldnet.att.net>
Rendered body type: text/plain

I am thinking of going to the Dauphin computer for a mobile aprs tracker.
Any body had any experience with one? It seems to have all the specs needed
for this application?

thanks for reading this
Norm-KG0ND
Norm Kluever KG0ND

262. Re: [APRSSIG:26083] DEMs + SA = TOPO!

From: Mark Sproul <msproul@ap.org>
Date: Thu, 09 Jul 1998 09:48:03 -0400
To: n2zrc@webspan.net, aprssig@tapr.org
Message-ID: <v03110703b1ca79d14685@[165.1.27.20]>
Rendered body type: text/plain

At 5:50 PM -0400 7/8/98, Arte Booten wrote:
>Hi all (particularly Keith, Mark & Brent),
>
>   I decided to drop into Eastern Mountain Sports today, just to look
>around, and ran across something VERY interesting ... particularly for
>the Search-and-Rescue types. It's one of a series of CD's that are the
>data equivalent of USGS 7 1/2 minute quads. I just played with it for
>about five minutes, and it's like looking at one of those big sheets of
>paper on the monitor. But instead of squinting and reaching for a mag-
>nifying glass, you can zoom in. You can draw routes. You can create
>elevation cross-sections of the terrain. But the version I have doesn't
>YET support GPS ... although they seem to want to (they ask you to men-
>tion if you're intersted in GPS on the registration card).

You obviously have missed several postings about this. I have it completly
working within WinAPRS, I just dont have it automatically figuring out
WHICH of the CD's you have. Currently I have it hard-coded for just one of
them. As soon as I have time, I will be finishing it and it should work
for all of their CD-ROMs.

Check out
        http://aprs.rutgers.edu/topo.html

For some screen shots

Mark

_____
(please note email address change msproul@ap.org)
_____
Mark Sproul |Amateur Radio: KB2ICI
Software Engineer @ Assoc Press |
msproul@ap.org |Work: 609-860-7120
North Brunswick, NJ |Fax: 609-860-7129
http://msproul.rutgers.edu/
_____

263. For A Good Time...

From: stan_horzepa@adc.com
Date: Thu, 09 Jul 1998 11:13:08 -0600
To: <aprssig@tapr.org>
Message-ID: <9807098999.AA899996981@adc.com>
Rendered body type: text/plain

Completely revamped, The WA1LOU Web Page is up and running at
     http://www.tapr.org/~wa1lou. Be sure to check out the cheap animation
     trick using the APRS maps on The Proof Is In The Positing page.

     Have Fun!

     Stan, WA1LOU

264. New APRS formats

From: Bob Bruninga <bruninga@nadn.navy.mil>
Date: Thu, 9 Jul 1998 14:19:09 -0400 (EDT)
To: aprssig@tapr.org
Message-ID: <Pine.SOL.3.96.980709140225.21848A-100000@arctic>
Rendered body type: text/plain

I just posted a TEST version of APRSdos called APRSNEW.EXE (as .ZIP)
It uses all of the new APRSformats that we have been adding to APRS over
the last year (for receive) but to date, have not transmitted. The
purpose of this APRSNEW.EXE is to allow beta testers to TRANSMIT the new
formats to see if they are truely backwards compatible as we have planned.

I currently have W3ADO-6 in Annapolis transmitting the new formats and

these should be appearing on APRServe. Here are the new packets to look
for:

  BLNA and BLNB are transmitted using the new MSG format
  NEWobj is a moving sailboat object off the Atlantic
  NEWobj2 is a fixed boat object off the Atlantic
  W3ADO-6 is sending its position in the new compressed format.

The locations of these are W3ADO-6 = 3859.12 07629.13
                           NEWobj = 3044.42 07926.83
                           NEWobj = 2942.98 07925.87

These positions may be RECEIVED with an error of +/- .01 (60 feet) due to
the new cmopressed format which SAVES 10 bytes. The new compressed format
also allows for GREATER precision down to 8 feet if an optional
DGPS byte is included, but the posits above are not using that Byte.

If you have friends or neighbors running Mac/Win/+SA or old versions of
APRSdos, go ahead and get APRSnew.exe and see what they see on the air...

APRSnew.exe was derived from APRS818 by only adding the new transmit
formats. A releasable version will have the new formats as a TRANSMIT
OPTION. But in this APRSnew.exe, the new formats are forced for the
purpose of testing...

bob WB4APR

P.S. The purpose of the new formats are:

1) To clean up the protocol (old MSGS and OBJ's did not have a leading
parse character identifier

2) The compressed format reduces a posit by almost 50% from 19 bytes down
to only 10. This will be very helpful on HF where shoreter packets are
more reliable and will help bandwidth on VHF too...

265. Kenwood manuals online

From: "Ronald G. Parsons" <w5rkn@amsat.org>
Date: Thu, 09 Jul 1998 14:15:54 -0500
To: APRS-SIG <aprssig@tapr.org>
Message-ID: <35A516EA.4ADBE044@amsat.org>
Rendered body type: text/plain

Now here's an idea that all amateur manufacturers should implement.

ALL CURRENT MANUALS ON-LINE
      06/01/1998 through 01/01/9999
      Thinking of purchasing a new Kenwood Amateur radio? Why not read
      the manual first? PLUS you have the assurance that there will
      always be a copy available, even when you sell or trade in your
      Kenwood. Go to the Kenwood FTP site from our homepage. All
      current operating manuals are available for downloading and
      printing in PDF using Adobe Acrobat Reader.
--
Ron Parsons
W5RKN

266. Re: [APRSSIG:26109] Kenwood manuals online

From: "Ronald G. Parsons" <w5rkn@amsat.org>
Date: Thu, 09 Jul 1998 15:00:51 -0500
To: APRS-SIG <aprssig@tapr.org>
Message-ID: <35A52173.8877E431@amsat.org>
Rendered body type: text/plain

Sorry, that's Kenwood's home page
http://www.kenwood.net/

So much for simple copy and paste.

Neil Lauritsen wrote:
>
> You forgot to mention the URL of your home Page.
>
> 73,
>
> Neil
>
> >   Thinking of purchasing a new Kenwood Amateur radio? Why not read

> >   the manual first? PLUS you have the assurance that there will
> >   always be a copy available, even when you sell or trade in your
> >   Kenwood. Go to the Kenwood FTP site from our homepage.
>
> ^^

--
Ron Parsons
W5RKN

267. Re: [APRSSIG:26103] Doppler systems doppler

From: Wes Johnston <kd4rdb@eagnet.com>
Date: Thu, 09 Jul 1998 16:52:52 -0400
To: munseyj@worldnet.att.net, aprssig@tapr.org
Message-ID: <3.0.32.19980709165250.006e0028@gena>
Rendered body type: text/plain

sounds like a job for Steve Dimse and his PIC. He's parsing data from a
weather station with it, and I see no difference in using the pic to
convert baud rates / data formats.

At 08:04 AM 7/9/98 -0500, you wrote:
>HELP !!!!
>
>has anyone interfaced the Doppler Systems doppler and a GPS to APRS? I am
>running VER 2.2.0.
>
>There are several problems. First APRS only accepts the Agrelo doppler
>data stream.. Dop Sys is different.
>
>Second the Dop Sys is 300 baud and can only be modified up to 2400. The
>GPS is at 4800 baud so if you use only one com port the doppler has to be
>raised to 4800 baud.
>
>Third is there a port adapter to combine the two signals and switch from
>one to the other saw every 5- 10 seconds?
>
>Thanks for any suggestions.
> My EMAIL is   munseyj@worldnet.att.net
>
>
>John Munsey, KB3GK
>Ormond Beach, Fl.
>munseyj@worldnet.att.net
>
>
Wes
Email: mailto:kd4rdb@usa.net
APRS: http://www.qsl.net/kd4rdb/aprs.htm
A good traveler has no fixed plans and is not intent on arriving.

268. Re: [APRSSIG:26100] pico/kenwood TM-V7

From: Wes Johnston <kd4rdb@eagnet.com>
Date: Thu, 09 Jul 1998 17:17:20 -0400
To: aprssig@tapr.org
Message-ID: <3.0.32.19980709171719.006e2898@gena>
Rendered body type: text/plain

ftp://208.197.91.81/e:/kenwood/kenftp/kenwood/Amateur/AmateurApplicationNote
s/AAN0010.JPG

here is the data jack pins.... PKS is the PTT, have NO idea why they named
it like that.

3 PKS is PTT
1 PKD is TX (mic) audio
5 PR1 is rx audio
2 DE is ground

At 06:02 AM 7/9/98 -0500, you wrote:
>member #7030. can someone help me with setting up a aprs station?Iam
>having trouble making my station work properly.Need help pico with built
>in gps hooked up toKenwood TM-V7.Problem is the wiring in the kenwood
>book is not clear. Would appreciate hearing from anyone that has this
>equipment on line. Thanks James Phillips KF4ETX
>
>_____
>Get Your Private, Free Email at http://www.hotmail.com

>
>
Wes
Email: mailto:kd4rdb@usa.net
APRS: http://www.qsl.net/kd4rdb/aprs.htm
A good traveler has no fixed plans and is not intent on arriving.

269. PMAP OCX CONTROL ALERT

From: Robert Boeckman <machead@black-hole.com>
Date: Thu, 9 Jul 1998 17:00:24 -0500
To: aprssig@tapr.org
Message-ID: <v04003a01b1caa6bc9cb0@[206.145.13.31]>
Rendered body type: text/plain

Trying to get Precision Mapping Streets 3.0 to work with WinAPRS 2.2.0. I
installed the MAP_OCX files. But when I open a new Precision Maping I get
the alert "Failed to create PMAP OCX control. Tried reinstalling the
MAP_OCX files several times.

Any ideas what I am doing wrong will be appreciated.....

http://www.black-hole.com/users/tardis/

270. Re: [APRSSIG:26111] Re: Doppler systems doppler

From: Steve Dimse K4HG <k4hg@tapr.org>
Date: Thu, 9 Jul 1998 18:28:58 -0400
To: <kd4rdb@eagnet.com>, "aprssig" <aprssig@tapr.org>
Message-ID: <199807092228.RAA29790@tapr.org>
Rendered body type: text/plain

On 7/9/98 4:59 PM Wes Johnston (kd4rdb@eagnet.com) wrote:

>sounds like a job for Steve Dimse and his PIC. He's parsing data from a
>weather station with it, and I see no difference in using the pic to
>convert baud rates / data formats.
>
I'm not going to do it, but it would be easy to do. I went from "What's a
PIC?", to producing the WX-PIC in a month...anyone else could too...

>At 08:04 AM 7/9/98 -0500, you wrote:
>>HELP !!!!
>>
>>has anyone interfaced the Doppler Systems doppler and a GPS to APRS? I am
>>running VER 2.2.0.
>>
>>There are several problems. First APRS only accepts the Agrelo doppler
>>data stream.. Dop Sys is different.
>>
>>Second the Dop Sys is 300 baud and can only be modified up to 2400. The
>>GPS is at 4800 baud so if you use only one com port the doppler has to be
>>raised to 4800 baud.
>>
>>Third is there a port adapter to combine the two signals and switch from
>>one to the other saw every 5- 10 seconds?
>>

271. Re: [APRSSIG:26074] the pressure display debate

From: "9-0043gz^Zh4/0" <rocketman@basinlink.com>
Date: Thu, 9 Jul 1998 18:04:37 -0600
To: aprssig@tapr.org
Message-ID: <B0000595400@usamail.texasonline.net>
Rendered body type: text/plain

> WB5MYY in Dallas, TX checking in and casting a _strong_ vote in favor of
> user selectable millibars/inches/Kpa.
>
> I think the metric system is great, but when I hear/see "28.85" I get an
> immediate mental picture containing useful information. When I hear/see 'X'
> millibars, I start going "well, lets see now, ah, thats, ah,...ah, how many
> inches is that?..."

Dittos here too.

Also I like the ability to display altitude in feet - converting meters to feet
is not very efficient having been a pilot this long too.

Another very useful thing - would be able to select the way lat / long is
displayed on the status bar, so that more precise fractions of a second of
latitude / long can be copied / pasted into a global label text file.

Also - I'm still waiting for a way to edit the Windows / Mac format maps to
reflect updates, such as streets that were ripped up to form larger blocks a
decade ago, a highway that was finished when I was still in high school that is
conspicuously missing, etc.

-73- de N5PSP - Alton

"We hold these truths to be self-evident, that all men are created
equal; that they are endowed by their Creator with certain
unalienable rights, and among them are Life, Liberty, and the Pursuit
of Happiness."

272. New ICON?

From: w1eo@gw.ri.ultranet.com ("DoC" Dave Willard)
Date: Thu, 09 Jul 98 22:53:04 UTC
To: aprssig%tapr.org@switch.woonri
Message-ID: <22461@gw.ri.ultranet.com>
Rendered body type: text/plain

I think we need a new ICON for **LARGE** 18 wheelers. <g>.
Has anyone seen Peter's new Kenworth? 330 inch wheelbase and a back door!
What a giant. Four GPS receivers and an automatic sat receiver system.
A thing of beauty!

Just kidding Bob. <grin>.

73 DoC, W1EO@gw.ri.ultranet.com
sysop @ w1on.ma.usa.noam, switch.bedford [44.56.4.1] and Boston APRS GATEway.
Data provider to NADSD-TAPR for New England (CT,NH,MA,ME,RI,VT)

273. Re: [APRSSIG:26103] Doppler systems doppler

From: "9-0043gz^Zh4/0" <rocketman@basinlink.com>
Date: Thu, 9 Jul 1998 18:35:10 -0600
To: "John Munsey, KB3GK" <munseyj@worldnet.att.net>, aprssig@tapr.org
Message-ID: <B0000595536@usamail.texasonline.net>
Rendered body type: text/plain

This sounds like a job for a PIC data converter / parser. Ought to be possible
to capture a string at one baud rate, convert it to a different data stream
type (like Dop Sys to Agrelo) and then squirt it out at 4800 baud.

I wish I didn't have so many projects going on or I'd jump right into it - have
a couple of tubes of PIC16C620s and getting some samples of the 16C74. Only
have 4 eraseable ones though ('620).

> HELP !!!!
>
> has anyone interfaced the Doppler Systems doppler and a GPS to APRS? I am
> running VER 2.2.0.
>
> There are several problems. First APRS only accepts the Agrelo doppler
> data stream.. Dop Sys is different.
>
> Second the Dop Sys is 300 baud and can only be modified up to 2400. The
> GPS is at 4800 baud so if you use only one com port the doppler has to be
> raised to 4800 baud.
>
> Third is there a port adapter to combine the two signals and switch from
> one to the other saw every 5- 10 seconds?
>
> Thanks for any suggestions.
> My EMAIL is   munseyj@worldnet.att.net
>
>
> John Munsey, KB3GK
> Ormond Beach, Fl.
> munseyj@worldnet.att.net
>
>
-73- de N5PSP - Alton

"We hold these truths to be self-evident, that all men are created
equal; that they are endowed by their Creator with certain
unalienable rights, and among them are Life, Liberty, and the Pursuit
of Happiness."

274. Re: [APRSSIG:26071] WX - millibars vs. Inches

From: "Kevin Heyboer" <kd4uyr@gte.net>
Date: Thu, 9 Jul 1998 20:12:53 -0400
To: <projunltd@compuserve.com>, <aprssig@tapr.org>
Message-ID: <003101bdab97$81bcfe20$f9f4ffd0@kh>
Rendered body type: text/plain

I hate to disagree with you Orin...but....although the NWS converts
barometric pressure to the English system in its public products...they use
millibars exclusively for model output and forecasting.....and when it comes
to incoming data, they always prefer millibars because it is much more
precise
-----Original Message-----
From: Mark Oppenheim <projunltd@compuserve.com>
To: aprssig@tapr.org <aprssig@tapr.org>
Date: Wednesday, July 08, 1998 12:53 PM
Subject: [APRSSIG:26071] WX - millibars vs. Inches

No where in the message did I infer that millibars wasn't needed.

I also said that it would be nice if APRS programs could display in
millibars/inches/Kpa - and secondary to that, changing the protocol (which
I think would be detrimental to the slowly growing user base of overseas
ops that are starting to make their own maps and use APRS) which of course,
I don't think is in anyone's best intrest to do.

However, despite what some say, NWS forcasts are in inches. Aviation
forecasts are in inches. The only community that seems to use mb on a
regular basis are boaters.

As a pilot, I'd just like to see something I understand like "30.02" on my
APRS screen, rather than "1012.8". A user selectable display within that
user's APRS program would be ideal. That way, users could display what
they like to see, and the fact that APRS squirts out millibars or
micrometers from the RF port wouldn't matter one bit.

Unfortunately, feet and inches are going to be around for a long time,
mainly because the worldwide aviation world has adopted it, and if you need
more reinforcement that the industry moves to change slowly - consider the
fact that all their VHF comminicatons are still using AM :-)

-Mark

------------ Orrin, wn1z wrote:

>Message-Id: <6166@babylon.wn1z.ampr.org>

At 02:36 PM 7/7/98 -0500, Mark Oppenheim wrote:
>Since most of us (non-boating types, that is) don't use millibars, can
>there be something in the programs that will display in inches/hg or (god,
>I HATE to bring this up) changing the protocol to send inches instead?

The whole world is on millibars / kiloPascals. Why go back to the
dark ages with inches?

Also, the metric system has been LEGAL in the U.S. since
the 1860s.   Time to change. Leave aprs metric if that's the
way it is now!

275. Re: [APRSSIG:26077] Re: the pressure display debate

From: "Kevin Heyboer" <kd4uyr@gte.net>
Date: Thu, 9 Jul 1998 20:14:59 -0400
To: <jack.lebreton@sympatico.ca>, <aprssig@tapr.org>
Message-ID: <003c01bdab97$c85a1480$f9f4ffd0@kh>
Rendered body type: text/plain

gotta agree here...and by the way....if your barometer reads 28.85...you
better HEAD FOR THE HILLS....a hurricane is coming.
-----Original Message-----
From: jack.lebreton@sympatico.ca <jack.lebreton@sympatico.ca>
To: aprssig@tapr.org <aprssig@tapr.org>
Date: Wednesday, July 08, 1998 3:13 PM
Subject: [APRSSIG:26077] Re: the pressure display debate

>On 1998-07-08 someone said to APRSsig

```
>
>   >I think the metric system is great, but when I hear/see "28.85" I
>   >get an immediate mental picture containing useful information. When
>   >I hear/see 'X' millibars, I start going "well, lets see now, ah,
>   >thats, ah,...ah, how many inches is that?..."
>
>COMMENT: The NUMBER itself is not important ! It's the
>             CHANGE from the last number recorded that is important
>           - a FALLING/RISING barometer is all one needs whether
>             that change is from 27.2 to 28.85 or
>             from 997.1 to 1009.5
>           - none of these numbers correlate, yet I know that the
>             barometer is RISING (improving weather ahead).
>
>    My $.02 worth, at least.
>                                   73 de Jack VA3JAX
>
>
>Annabelle and Jack LeBreton -- please reply to va3jax@torfree.net
>---------------------------------------------------------------
>
>Net-Tamer V 1.09.2  - Test Drive
>
```

276. Was on New ICON

```
From: VE3NEC@peel.com (John Langtry)
Date: Thu, 09 Jul 1998 20:45:29 -0400
To: aprssig@tapr.org
Message-ID: <35A56429.35AF@peel.com>
Rendered body type: text/plain
```

Folks :

DoC's earlier posting about Peter W7LUS's BIG RIG, while
he might be kidding about the icon; it sure is a beautiful
machine. Peter has some new pictures posted, as well as
some enlargements, and the old photo's are all available
from his home page at :
http://home.att.net/~w7lus/
Drop by and have a look at the BIG RIG that you're seeing
on your APRS screen. It's well worth the visit !

vy 73 de John VE3NEC

--

John Langtry, VE3NEC
Credit Lodge # 219
905-873-8715
ve3nec@rac.ca
* * * * *

277. Re: [APRSSIG:26050] Peet Bros Problem

```
From: ks4lb_bob@juno.com (Robert W Oldham)
Date: Thu, 09 Jul 1998 21:13:23 EDT
To: aprssig@tapr.org
Message-ID: <19980709.210002.4719.0.ks4lb_bob@juno.com>
Rendered body type: text/plain
```

Please reply to the list -- mine has the same problem. I haven't had much
time to troubleshoot, but advice would be helpful!

Bob Oldham, KS4LB

On Tue, 7 Jul 1998 23:53:33 -0500 (CDT) "Rich Casey" <casey@acm.org>
writes:
>Speaking of Peet Brothers, my wired .1 rain gauge has stopped taking
>readings after less than 18 months of operation. I can't see anything
>physically wrong with it, have exercised it a bit, but can't get it to
>come
>back to life. Any troubleshooting ideas before I break down and open
>my
>wallet for new one?
>
>Rich
>Rich Casey, Dallas TX | Amateur Radio N5CSU
>casey@acm.org | http://www.startext.net/homes/rcasey
>   --- Think globally, connect locally ---
>
>

>

_____
You don't need to buy Internet access to use free Internet e-mail.
Get completely free e-mail from Juno at http://www.juno.com
Or call Juno at (800) 654-JUNO [654-5866]

278. Tracker using Magellan 4000XL and KPC-3+

From: "Dave Schwartz" <davenpat@kw.igs.net>
Date: Thu, 9 Jul 1998 22:20:36 -0400
To: <aprssig@tapr.org>
Message-ID: <000101bdaba9$624d55a0$9137f8ce@meenie.waterloo>
Rendered body type: text/plain

I've received some packet messages from a nearby ham trying to set up a standalone tracker using a Magellan 4000XL and a KPC-3+ (don't know the model of the radio). I think he's also uning a Kantronics HSP cable. He says he shows up on his own P, L, H, and D pages but not anyone else's. Another ham who lives a bit closer has tried to help but without success. I will be going over next weekend to take a look and would like to go armed with information about a setup that someone had made work with the 4000XL (I have lots of experience with the KPC-3+ - that's what my tracker uses). I've already sent a reply asking if the XMITLVL has been verified (the TNC seems to be keying the radio but the audio is not verified). I will be taking a deviation meter to set that up. I'd appreciate any pitfalls to check with this setup.

279. Re: [APRSSIG:26121] Re: Peet Bros Problem

From: Ralph Fowler <rwf@BSRG.org>
Date: Thu, 09 Jul 1998 22:02:51 -0400
To: aprssig@tapr.org
Message-ID: <199807100224.WAA24013@cocacola-bh.cokecce.com>
Rendered body type: text/plain

So have both of mine!!
What gives??

At 08:21 PM 7/9/98 -0500, you wrote:
>Please reply to the list -- mine has the same problem. I haven't had much
>time to troubleshoot, but advice would be helpful!
>
>Bob Oldham, KS4LB
>
>On Tue, 7 Jul 1998 23:53:33 -0500 (CDT) "Rich Casey" <casey@acm.org>
>writes:
>>Speaking of Peet Brothers, my wired .1 rain gauge has stopped taking
>>readings after less than 18 months of operation. I can't see anything
>>physically wrong with it, have exercised it a bit, but can't get it to
>>come
>>back to life. Any troubleshooting ideas before I break down and open
>>my
>>wallet for new one?

280. RE: [APRSSIG:25918] PicoPacket RFI??

From: "Jerry Rector" <jerryr@gate.net>
Date: Thu, 9 Jul 1998 22:46:04 -0400
To: "'John Chu'" <ve6jkc@oanet.com>, <aprssig@tapr.org>
Message-ID: <199807100245.WAA218654@osage.gate.net>
Rendered body type: text/plain

I made up a new serial-2 cable, putting mini-ferrite beads on the
TXD and RXD leads AT the miniplug. Choking these leads as close as
possible to the TNC did the trick for me.
(I use an external antenna, so the proximity of the TNC to the radio's
RF input was not a problem for me)

73 de Jerry, KB4OAM
mailto:jerryr@gate.net
http://members.tripod.com/kb4oam

-----Original Message-----
From: John Chu [mailto:ve6jkc@oanet.com]
Sent: Thursday, July 09, 1998 07:06 PM
To: jerryr@gate.net
Subject: Re: [APRSSIG:25918] PicoPacket RFI??

HI Jerry I have the same problem. If you find any solution, Please foreward
it to me as well. I tried ferrite on evry single cable, but the improvement
was small? The best result I got was from fix antenna instead of the rubber
ducky.

73 John ve6jkc

>Is anyone experiencing RFI emanating from the PicoPacket (Two-port model)
>each time
>the DCD LED lights. It totally messes up decoding of all but the strongest
>packets.
>My MFJ1270b does not cause this problem.
>I have installed ferrite toroids on the +12V power to the PicoPacket and
the
>Icom 25.
>Seems to me I recall reading of a similar problem here on the sig earlier
>this year.
>Any help/ideas.
>Jerry, KB4OAM
>mailto:jerryr@gate.net
>http://members.tripod.com/kb4oam
>
>
>
>begin 666 ATT00002.htm
>M/"%$3T-465!%($A434P@4%5"3$E#("(M+R]7,T,O+T141"!7,R!(5$U,+R]%
>M3B(^#0H\2%1-3#X-"CQ(14%$/@T*/$U%5$$@2%144"U%455)5CTB0V]N=&5N
>M="U4>7!E(B!#3TY414Y4/2)T97AT+VAT;6P[(&-H87)S970]:7-O+3@X-3DM
>M,2(^#0H-"@T*#0H\345402!C;VYT96YT/2<B35-(5$U,(#4N,# N,#4Q."XW
>M(B<@;F%M93U'14Y%4D%43U(^#0H\+TA%040^#0H\0D]$62!B9T-O;&]R/2-F
>M9F9F9F8^#0H\1$E6/CQ34$%.(&-L87-S/3<U,C,U-3(P,RTP-3 W,3DY.#X\
>M1D].5"!C;VQO<CTC,# P,# P(&9A8V4]07)I86P@<VEZ93TR/DES(T*86YY
>M;VYE(&5X<&5R:65N8VEN9R!21DD@96UA;F%T:6YG(&9R;VT@=&AE(%!I8V]0
>M86-K970@*%1W;RUP;W)T(&UO9&5L*2!E86-H(T*=&EM93PO1D].5#X\+U-0
>M04X^/"]$258^#0H-"CQ$258^/%-004X@8VQA<W,]-S4R,S4U,C S+3 U,#<Q
>M.3DX/CQ&3TY4(&-O;&]R/2,P,# P,# @9F%C93U!<FEA;"!S:7IE/3(^=&AE
>M(T*1$-$($Q%1"!L:6=H=',N)FYB<W [($ET('1O=&%L;'D@;65S<V5S('5P
>M(&1E8V]D:6YG(&]F(&%L;"!B=70@=&AE('-T<F]N9V5S=" -"G!A8VME=',N
>M/"]&3TY4/CPO4U!!3CX\+T1)5CX-"@T*/$1)5CX\4U!!3B!C;&%S<STW-3(S
>M-34R,#,M,#4P-S$Y.3@^/$9/3E0@8V]L;W(](S P,# P,"!F86-E/4%R:6%L
>M('-I>F4],CY->2 -"DU&2C$R-S!B(&1O97,@;F]T(&-A=7-E('1H:7,@<')O
>M8FQE;2X\+T9/3E0^/"]34$%./CPO1$E6/@T*#0H\1$E6/CQ34$%.(&-L87-S
>M/3<U,C,U-3(P,RTP-3 W,3DY.#X\1D].5"!C;VQO<CTC,# P,# P(&9A8V4]
>M07)I86P@<VEZ93TR/DD@:&%V92 -"FEN<W1A;&QE9"!F97)R:71E('1O<F]I
>M9',@;VX@=&AE("LQ,E8@<&]W97(@=&\@=&AE(%!I8V]086-K970@86YD('1H
>M92!)8V]M(T*,C4N/"]&3TY4/CPO4U!!3CX\+T1)5CX-"@T*/$1)5CX\4U!!
>M3B!C;&%S<STW-3(S-34R,#,M,#4P-S$Y.3@^/$9/3E0@8V]L;W(](S P,# P
>M,"!F86-E/4%R:6%L('-I>F4],CY3965M<R -"G1O(&UE($D@<F5C86QL(')E
>M861I;F<@;V8@82!S:6UI;&%R('!R;V)L96T@:&5R92!O;B!T:&4@<VEG(&5A
>M<FQI97(@=&AI<R -"GEE87(N/"]&3TY4/CPO4U!!3CX\+T1)5CX-"@T*/$1)
>M5CX\4U!!3B!C;&%S<STW-3(S-34R,#,M,#4P-S$Y.3@^/$9/3E0@8V]L;W(]
>M(S P,# P,"!F86-E/4%R:6%L('-I>F4],CY!;GD@#0IH96QP+VED96%S+CPO
>M1D].5#X\+U-004X^/"]$258^#0H-"CQ$258^/%-004X@8VQA<W,]-S4R,S4U
>M,C S+3 U,#<Q.3DX/CQ&3TY4(&-O;&]R/2,P,# P,# @9F%C93U!<FEA;"!S
>M:7IE/3(^2F5R<GDL(T*2T(T3T%-/"]&3TY4/CPO4U!!3CX\+T1)5CX-"@T*
>M/$1)5CX\4U!!3B!C;&%S<STW-3(S-34R,#,M,#4P-S$Y.3@^/$9/3E0@8V]L
>M;W(](S P,# P,"!F86-E/4%R:6%L('-I>F4],CX\02 -"FAR968](FUA:6QT
>M;SIJ97)R>7) 9V%T92YN970B/FUA:6QT;SIJ97)R>7) 9V%T92YN970\+T$^
>M/"]&3TY4/CPO4U!!3CX\+T1)5CX-"@T*/$1)5CX\4U!!3B!C;&%S<STW-3(S
>M-34R,#,M,#4P-S$Y.3@^/$9/3E0@8V]L;W(](S P,# P,"!F86-E/4%R:6%L
>M('-I>F4],CX\02 -"FAR968](FAT=' Z+R]M96UB97)S+G1R:7!O9"YC;VTO
>M:V(T;V%M(CYH='1P.B\O;65M8F5R<RYT<FEP;V0N8V]M+VMB-&]A;3PO03X\
>M+T9/3E0^/"]34$%./CPO1$E6/@T*#0H\1$E6/CQ34$%.(&-L87-S/3<U,C,U
>M-3(P,RTP-3 W,3DY.#X\1D].5"!C;VQO<CTC,# P,# P(&9A8V4]07)I86P@
>M#0IS:7IE/3(^/"]&3TY4/CPO4U!!3CXF;F)S<#L\+T1)5CX-"CPO0D]$63X\
>(+TA434P^#0H`
>`
>end
>
>
>

John Kai-yan Chu   □□□□□□ My Chinese name in big 5 code.
e-mail address: ip address:
ve6jkc@ve6jkc.ampr.ab.ca   192.75.200.33

ve6jkc@oanet.com
ve6jkc@ve6jkc.ampr.org 44.135.147.15
ax25 Packet address:
ve6jkc@ve6kik.#edm.ab.can.noam.

---

281. Little Rig

From: Jeff Reinhardt <jreinh@ix.netcom.com>
Date: Thu, 09 Jul 1998 20:39:26 -0700
To: aprssig@tapr.org
Message-ID: <35A58CEE.4AC4@ix.netcom.com>
Rendered body type: text/plain

I can't quite compete with Peter's new rig, but I have been tearing
up the interstates from SoCal to Western New York...anyone see
AA6JR-9 the past few days? I won't be shocked if you haven't as
the small size of the car didn't permit a "big rig" installation.

July 7: LA to Albequerque
July 8: Albequerque to Joplin, MO
July 9: Joplin to Medina, OH (just south of Cleveland)
July 10: Cleveland to Buffalo, then east to the Rochester area.

Have been transmitting on 144.39 since entering Missouri

73, Jeff

P.S. My nomination for the new state symbol of Ohio is the orange
construction barrel

282. Re: appl question

From: Jeff Brenton <jeffb@espi.com>
Date: Thu, 09 Jul 1998 22:49:59 -0500
To: "Guy Story, KC5GOI" <kc5goi@infospeedway.net>
Cc: aprssig <aprssig@tapr.org>
Message-ID: <35A58F67.34F9@espi.com>
Rendered body type: text/plain

Guy Story, KC5GOI asked:
> Jeff, before I go after that monster file, IF I am correct, the
> appl.zip lets me do callsign lookup without having to use a cdrom,
> correct?

Yes, you can do callsign lookups without the CDROMs....

Procedure:

Download big ZIP file (25MB)
Unzip it to the \WINAPRS\DATA directory
Start WINAPRS
Open Settings/Callbook Database menu
Select FCC Downloaded files
  [at this point it should fill in "data\appl.dat" for database file]
Click on "check file" to make sure it is found
Click on "Call index" button in lower left corner; wait for completion

At this point, the call book database SHOULD be working; just
double-click on a station on your map to see the info.

One thing I *highly* recommend, though - for both file paths, give the
COMPLETE path [as in "C:\WINAPRS\DATA\APPL.DAT"] in place of the partial
paths filled in by WINAPRS.

Why? It's a legacy to how WinAPRS handles the "current directory"; if
you do a File/Open and move out of the WinAPRS directory, you're link to
the call database is broken, unless you have the full path there. Known
issue; Mark has said he will look into it when higher-priority items are
taken care of.

The file is at:
ftp://ftp.fcc.gov/pub/XFS_AlphaTest/amateur/appl.zip
ftp://ftp.fcc.gov/pub/XFS_AlphaTest/amateur/ [to look at what else is
there]
--

Jeff Brenton, Ham Radio call KA9VNV
Questionable web page: http://www.dididahdahdidit.com
Covert supporter of the Vast Right Wing Conspiracy (tm)

283. Re: [APRSSIG:26123] Re: Peet Bros Problem

From: Jeff Brenton <jeffb@espi.com>
Date: Thu, 09 Jul 1998 23:00:40 -0500
To: rwf@bsrg.org
Cc: aprssig <aprssig@tapr.org>
Message-ID: <35A591E8.2DA0@espi.com>
Rendered body type: text/plain

If the construction of the Peet .1" rain gauge is like that of the Davis .1" gauge, there are a couple of things that can go wrong.

Check for a short between the two wires that actually do anything; there shouldn't be one, EXCEPT for the instant when .1" of rain has been captured. If there is, the reed switch has either welded shut or otherwise failed in the closed position, meaning you'll never get a count. Well, actually, plugging and unplugging the gauge will give .1" counts for each time you do it...

If no short, verify that, when you put water through it, you DO get a pulse (short) as the float reaches the top, which goes away when the water flows out.

If there isn't a short all the time, and the gauge does short for an instant when water flows through it, then it's in the main package or the interface module...
--

Jeff Brenton, Ham Radio call KA9VNV
Questionable web page: http://www.dididahdahdidit.com
Covert supporter of the Vast Right Wing Conspiracy (tm)

284. Re: [APRSSIG:26125] Little Rig

From: n8exf@juno.com (R L BOEHM)
Date: Fri, 10 Jul 1998 00:24:42 -0400
To: jreinh@ix.netcom.com
Cc: aprssig@tapr.org
Message-ID: <19980710.002452.3790.1.N8EXF@juno.com>
Rendered body type: text/plain

On Thu, 9 Jul 1998 22:38:41 -0500 (CDT) Jeff Reinhardt
<jreinh@ix.netcom.com> writes:
>I can't quite compete with Peter's new rig, but I have been tearing
>up the interstates from SoCal to Western New York...anyone see
>AA6JR-9 the past few days? I won't be shocked if you haven't as
>the small size of the car didn't permit a "big rig" installation.
>
>July 7: LA to Albequerque
>July 8: Albequerque to Joplin, MO
>July 9: Joplin to Medina, OH (just south of Cleveland)
>July 10: Cleveland to Buffalo, then east to the Rochester area.
>
>Have been transmitting on 144.39 since entering Missouri
>
>73, Jeff
>
>P.S. My nomination for the new state symbol of Ohio is the orange
>construction barrel
>
>
The orange barrel is the State FLOWER! Blooms in the spring, it is a migatory plant, follows the highways.

73 de Bob, N8EXF // KN
homepage   http://www.qsl.net/n8exf

Igloos are polar bear snacks, crunchy on the outside, warm and chewy on the inside.

_____
You don't need to buy Internet access to use free Internet e-mail.
Get completely free e-mail from Juno at http://www.juno.com
Or call Juno at (800) 654-JUNO [654-5866]

285. aprs digi

From: Wes Johnston <kd4rdb@eagnet.com>
Date: Fri, 10 Jul 1998 00:30:33 -0400
To: aprssig@tapr.org
Message-ID: <3.0.32.19980710003031.0069f0e4@gena>

Rendered body type: text/plain

We don't have a WIDEn-n type node here handy, so I have to ask the sig....

When a WIDE3-3 packet propogates thru the network, which is true:
Scenario A
wide3-2, wide3-1, and wide3*

Scenario B
wide3-2, wide3-1, and wide3, wide3*

Anyone know for sure.... kantronics web site does not make this point clear.

Well, here's the progress report on the aprs digi software:

The aprs digi has everything set to default values (wide,trace, relay and
mycall=kd4rdb). The comport is set to 4800, com1. Eventually it will have
command processor and an INI file to load from disk. Right now it has a
background clock ticking that will eventually keep track of 30 second and 8
hour queues for us. To be honest, it behaves like an ordinary digipeater
now, with WIDEn-n accepting values up to 15 and a TRACE callsign
substitution. Once I got over the KISS code and the raw ax25 stuff, it's
been going pretty quickly.
Wes
Email: mailto:kd4rdb@usa.net
APRS: http://www.qsl.net/kd4rdb/aprs.htm
A good traveler has no fixed plans and is not intent on arriving.

286. Re: Little Rig

From: Jay <jaykq4ms@ipass.net>
Date: Fri, 10 Jul 1998 00:48:18 -0400
To: aprssig@tapr.org
Message-ID: <3.0.5.32.19980710004818.007d9100@mail.ipass.net>
Rendered body type: text/plain

>On Thu, 9 Jul 1998 22:38:41 -0500 (CDT) Jeff Reinhardt
><jreinh@ix.netcom.com> writes:
>>I can't quite compete with Peter's new rig, but I have been tearing
>>up the interstates from SoCal to Western New York...anyone see
>>AA6JR-9 the past few days? I won't be shocked if you haven't as
>>the small size of the car didn't permit a "big rig" installation.
>>
>>July 7: LA to Albequerque
>>July 8: Albequerque to Joplin, MO
>>July 9: Joplin to Medina, OH (just south of Cleveland)
>>July 10: Cleveland to Buffalo, then east to the Rochester area.
>>
>>Have been transmitting on 144.39 since entering Missouri
>>
>>73, Jeff
>>
>>P.S. My nomination for the new state symbol of Ohio is the orange
>>construction barrel
>>
>>
>The orange barrel is the State FLOWER! Blooms in the spring, it is a
>migatory plant, follows the highways.
>
>73 de Bob, N8EXF // KN
>homepage http://www.qsl.net/n8exf
>
>Igloos are polar bear snacks, crunchy on the outside, warm and chewy on
>the inside.
>
>_____
>You don't need to buy Internet access to use free Internet e-mail.
>Get completely free e-mail from Juno at http://www.juno.com
>Or call Juno at (800) 654-JUNO [654-5866]
>
>
>
Obviously you guys have NOT traveled in NC or SC!!!

Jay/KQ4MS
Raleigh, NC

287. Bad behaviour for digi... Kantronics v8.2

From: Jeff Brenton <jeffb@espi.com>
Date: Fri, 10 Jul 1998 00:31:50 -0500

To: DigiOwners <digiowners@lounet.com>
Cc: aprssig <aprssig@tapr.org>
Message-ID: <35A5A746.4A1F@espi.com>
Rendered body type: text/plain

I've been noticing lately that multi-line messages have been taking many tries to get through, and only one line at a time makes it. This is especially bad on a wide-area NWS counties activation... which works fine from my computer attached TO the digipeater, but not from others.

Well, guess what? If you send multiple packets in one continuous transmission to a KPC-3 digi and version 8.2.7265 software (not YET tested with the KPC-3 Plus), you'll find that, when your station unkeys, the digipeater is already transmitting! It started when the first packet completed, without waiting to see if the frequency is clear...

Using UIDWAIT doesn't fix this - when ON, it is SUPPOSED to wait until the frequency is clear, THEN wait for the DWAIT or PERSIST values (depending upon settings) to expire, THEN key up. But, as soon as the first packet completes, it goes on the air, no matter what!

This explains why I can get 3 or 4 county batches to "light up", but when I mark more than that for transmission from my office, all the counties after what shows up on the first line (i.e., the first packet sent) do NOT get out.

Has anyone else noticed this? Does it happen with version 8.3, for you beta testers? Please check - I'd hate to see Kantronics release a new version with THIS bug in it!

(note - I've tried paths of "WIDE3-3" and "WIDE,WIDE3-3", and both exhibit the one-line-at-a-time syndrome, so it isn't just the UIFLOOD code)
--

Jeff Brenton, Ham Radio call KA9VNV
Questionable web page: http://www.dididahdahdidit.com
Covert supporter of the Vast Right Wing Conspiracy (tm)

288. Re: [APRSSIG:26129] aprs digi

From: Bob Bruninga <bruninga@nadn.navy.mil>
Date: Fri, 10 Jul 1998 01:36:04 -0400 (EDT)
To: Wes Johnston <kd4rdb@eagnet.com>
Cc: aprssig@tapr.org
Message-ID: <Pine.SOL.3.96.980710013515.3189C-100000@arctic>
Rendered body type: text/plain

APRS only defines WIDEn-n to a max of 7. See the Mic-E protocol which will use the 8-15 values for directional routing...

bob

289. Relevant quoting, please!

From: Jeff Brenton <jeffb@espi.com>
Date: Fri, 10 Jul 1998 00:44:58 -0500
To: aprssig <aprssig@tapr.org>
Message-ID: <35A5AA5A.5BCD@espi.com>
Rendered body type: text/plain

Could everyone practice restraint with quoting message, please? I realize that there is importance in keeping the context fresh when replying, but, really, a single line comment at the end of a 40-line quote, responding to a 1-line comment buried within that quote, is flat-out ridiculous!

Some people quote an entire 10K digest, only to add a couple of lines... and once, those lines were, "How do I stop getting these digests?"

And, for technical discussions especially, raw quotes are dangerous. In the last week, tempers flared around here because people didn't understand that they were simply using different terms for the same thing... if only they had restated what they THOUGHT was said, rather than quoting back the message verbatim, it would have become obvious rather quickly.

"The cup holder on my computer is broken; I'd like a replacement under warranty."
"Cup holder? We don't supply cup holders with our computers. Was it something given to you by the dealer as a promotional item?"

"No, it's the cup holder that is built into the system. You know, the
one that extends with that little button."
"Is this cup holder marked '24x', by chance?"
--

Jeff Brenton, Ham Radio call KA9VNV
Questionable web page: http://www.dididahdahdidit.com
Covert supporter of the Vast Right Wing Conspiracy (tm)

290. MacAPRS Help

From: "Gary Laurance" <n7nat@fnord.nwinfo.net>
Date: Fri, 10 Jul 1998 05:23:01 +0000
To: aprssig@tapr.org
Message-ID: <199807101223.FAA14033@fnord.nwinfo.net>
Rendered body type: text/plain

Does anyone know if there is an older version of MacAPRS that will
run on a Mac Classic, it has only 4 meg of ram. ??

Gary / Yakima WA / N7NAT

291. Results of APRS Field Day Contest

From: "John Blowsky" <kb2scs@worldnet.att.net>
Date: Fri, 10 Jul 1998 08:49:27 -0400
To: "aprssig" <aprssig@tapr.org>
Cc: "Jim" <ku0g@kcaprs.org>
Message-ID: <19980710130450.FHIF11463@default>
Rendered body type: text/plain

HI All
      Here are the results of the APRS Contest that
we held during FD.

HIGHEST SCORE
KC5GOI Total Points 44

HIGHEST SCORES By software (listed in highest point order)
winAPRS KC5GOI Total Points 44 kc5goi@infospeedway.net
APRSplus WB5QLD Total Points 41 mheskett@startext.net
APRSdos KF4BYA Total Points 33 nick_k@geocities.com

SINGLE OPERATOR (SO)
KC5GOI Total Points 44 ARRL section unknown
WB5QLD Total Points 41 NTX
KF4BYA Total Points 33 NFL
WB4APR Total Points 32 MDC
KB5GLV Total Points 22 NTX
KB2SCS Total Points 22 NLI
VE3RC Total Points 21 ONT
KE6AFE Total Points 20 SCV
KB0UZQ Total Points 15 MO
WA7NWP Total Points 5 WWA
N6FRI Total Points 2 EAST BAY SECTION OF PACIFIC DIV
                       unattended low power

MULTI OPERATOR (MO)
W6APA Total Points 12 LAX

Total stations submitted 12
All stations in separate ARRL sections except for the two
NTX stations.
No mobiles.

All in all a very good test of APRS under simulated
emergency conditions.
My only disappointment is that too few stations submitted their
reports.

Please spread these results to those who are not on the
APRSsig in your area.

I hope that the ARRL reinstates 2m FM packet as a viable form
of communication in next years FD. If not, then I hope we
do what we did this year. I am defiantly willing to
tabulate the results again.

Let us hope we never witness the "Silence Of The Hams"
73 DE John KB2SCS
   AmprNet: kb2scs@kb2scs.ampr.org [44.68.8.173]

Mail To: kb2scs@groucho.kc2ky.ampr.org [44.68.8.4]
E-Mail: kb2scs@worldnet.att.net

292. Re: [APRSSIG:26127] Re: Peet Bros Problem

From: BordingK@aol.com
Date: Fri, 10 Jul 1998 09:08:25 EDT
To: jeffb@espi.com, aprssig@tapr.org
Message-ID: <4f826564.35a6124a@aol.com>
Rendered body type: text/plain

In a message dated 98-07-10 00:21:18 EDT, you write:

<< aprssig@tapr.org >>

On the subject of Peet Rain Gauges:

I just noticed that with their .01 wired gauge and WinAPRS2.20 my station showed .80 rain in the last hour in the data block on the screen next to my icon, but showed .08 in the weather list!

Is this a new problem or have I just now noticed it. Kind of makes the information useless to anyone watching APRS for weather data, doesn't it?

de W5KNB
Ken

293. Re: [APRSSIG:26021] aprs digi software

From: Bob Bruninga <bruninga@nadn.navy.mil>
Date: Fri, 10 Jul 1998 09:38:50 -0400 (EDT)
To: Wes Johnston <kd4rdb@eagnet.com>
Cc: aprssig@tapr.org
Message-ID: <Pine.SOL.3.96.980710091703.29260D-100000@arctic>
Rendered body type: text/plain

On Tue, 7 Jul 1998, Wes Johnston wrote:

> I'm in the process of writing aprs digi software....
> [Whats the] opinion of compressing the packets of dumb trackers on the
> fly. An RMC string is over 70 characters long.... [The digi could]
> convert this ... to a MIC-E packet which is only [about 11 bytes long].

This actually is a very good idea. It would not use the Mic-E format, but could use the new compressed format that the authors are working on. This combined with the WIDEn-n routing, can cut a conventional TRACKER packet down by a factor of 3 or more. Thus permitting an over 300% improvement in channel capacity...

Compare:

```
WB4APR>APR817,WB4APR-11,KA3ATI-12,WB4HOB-15,WB4JNF-13,KA1DXX-11:$GPRMC
       ,123456,3859.1234,N,07629,1234,W,012,056,0.0,000,A,*CKsm
```

To:

```
WB4APR>GPSxyz,WIDE5-5:/XXXYYYd$csT
```

Thats 126 bytes reduced to 34 or a 370% improvement!

We were implementing this in versions of APRS, but that wouldnt help the LONG packets from all the trackers. But Wes's idea does! I think Kantronics also wants to convert directly to the compressed format directly in their trackers too. If they do that, then they already have the code to do the DIGI conversion too.

This should allow for plenty of new users on the channel by making the protocols more effecient!

Bob WB4APR

294. Re: [APRSSIG:26130] Re: Little Rig

From: Jon Ogden <jono@enteract.com>
Date: Fri, 10 Jul 98 09:12:29 -0500
To: <jaykq4ms@ipass.net>, <aprssig@tapr.org>
Message-ID: <199807101410.JAA06219@tapr.org>
Rendered body type: text/plain

>>>P.S. My nomination for the new state symbol of Ohio is the orange
>>>construction barrel
>>>

>>>
>>The orange barrel is the State FLOWER! Blooms in the spring, it is a
>>migatory plant, follows the highways.
>>

>>
>Obviously you guys have NOT traveled in NC or SC!!!

No, no, no. You ain't seen nothing until you've been to Illinois! And
here in Chicago, we get to PAY to get on the roads and see those orange
flowers! It's really lovely.

73,

Jon
KE9NA

Jon Ogden

jono@enteract.com
www.qsl.net/ke9na

"A life lived in fear is a life half lived."

295. Re: [APRSSIG:26134] MacAPRS Help

From: Jon Ogden <jono@enteract.com>
Date: Fri, 10 Jul 98 09:17:57 -0500
To: <n7nat@fnord.nwinfo.net>, <aprssig@tapr.org>
Message-ID: <199807101415.JAA06436@tapr.org>
Rendered body type: text/plain

>Does anyone know if there is an older version of MacAPRS that will
>run on a Mac Classic, it has only 4 meg of ram. ??
>

Gary,

I have ran MacAPRS on an original MacPlus. I believe I only had 4 meg.
Select the icon and then do a command-I (get info). From there you can
change the memory allocation of the program (sys 7 and later). Set it to
a lower value.

The problem with using less memory is you may only be able to load really
simple maps.

Also, MacAPRS on that machine will be really, REALLY slow.

73,

Jon
KE9NA

Jon Ogden

jono@enteract.com
www.qsl.net/ke9na

"A life lived in fear is a life half lived."

296. Motorola APRS Demo Sunday-reminder

From: Skip Allison-CFAD07 <Skip_Allison-CFAD07@email.mot.com>
Date: Fri, 10 Jul 1998 9:45:56 -0500
To: aprssig@tapr.org
Message-ID: <"Macintosh */PRMD=MOT/ADMD=MOT/C=US/"@MHS>
Rendered body type: text/plain

The Motorola Amateur Radio Club will be doing an Amateur Radio demo at the
Motorola Museum in Schaumburg, Il on July 12. Among other things, we will
be demonstrating APRS. We plan have a tracker up in a small plane cruising
the Chicago area. We will have a computer in the museum running APRS to
show the location, direction, altitude of the plane (as well as any other
APRS activity). The plane will also be equipped with an ATV transmitter
transmitting live fast scan video on 910.25 AM. The coordination will be on
the Motorola repeater (443.725 PL 2A). We did a test run last week and the

APRS worked out very well. The call will be K9MOT-7 (144.39). We will
probably be flying in the early afternoon around 2 PM. The weather is still
looking good.

Skip
K9SA

297. Re: [APRSSIG:26127] Re: Peet Bros Problem

From: Jeff Brenton <jeffb@espi.com>
Date: Fri, 10 Jul 1998 10:05:53 -0500
To: BordingK@aol.com
Cc: aprssig <aprssig@tapr.org>
Message-ID: <35A62DD1.7FFA@espi.com>
Rendered body type: text/plain

BordingK@aol.com wrote:
> I just noticed that with their .01 wired gauge and WinAPRS2.20 my
> station showed .80 rain in the last hour in the data block on the
> screen next to my icon, but showed .08 in the weather list!

"Old" problem in Win/MacAPRS (goes back a couple of versions, at least),
reported by me to Keith a month or two ago, just before 2.2/3.2 shipped.

When the gauge hits .10, the screen display will drop to zero... There
is probably a mis-placed character in the mask that choses what gets
displayed on the screen; should be fixed once the next version is ready.

It ONLY affects the screen display, not the over-the-air stuff or logs.
However, SOME weather stations do not broadcast rain figures, even
though they show up on the screen - this, I feel, is a more serious
problem. I know it affects the Heathkit stations, but not Davis, and
I've heard people with certain Peet stations complain about it, too.

--

Jeff Brenton, Ham radio call KA9VNV
http://www.espi.com
Questionable web page: http://www.dididahdahdidit.com
Covert supporter of the Vast Right Wing Conspiracy (tm)

298. Re: Peet Bros Problem

From: Joe Foor <kf4dys@wfeca.net>
Date: Fri, 10 Jul 1998 10:05:08
To: aprssig@tapr.org
Message-ID: <3.0.5.16.19980710100508.2e7f27b8@pop.wfeca.net>
Rendered body type: text/plain

The Peet Bros rain guage circuit consists of a magnetic reed switch
and a couple of wires. A simple continuity tester will locate the
problem.

1) Does the mechanical measuring cup freely move back and forth?
2) Is the magnet still attached to the arm on the bottom of the moving
   cup?
3) Does the magnetic switch change states when the magnet moves past
   it?
4) Do the wires and connector have continuity, with no shorts?
5) Are all the connector pins properly aligned?

If using another rain guage solves the problem, then this is all you
have to deal with.

If it got knocked down and run over, it would be easier to replace it.
Otherwise, go ahead and fix it...

>So have both of mine!!
>What gives??
>
>At 08:21 PM 7/9/98 -0500, you wrote:
>>Please reply to the list -- mine has the same problem. I haven't had much
>>time to troubleshoot, but advice would be helpful!
>>
>>Bob Oldham, KS4LB
>>
>>On Tue, 7 Jul 1998 23:53:33 -0500 (CDT) "Rich Casey" <casey@acm.org>
>>writes:
>>>Speaking of Peet Brothers, my wired .1 rain gauge has stopped taking
>>>readings after less than 18 months of operation. I can't see anything
>>>physically wrong with it, have exercised it a bit, but can't get it to

>>>come
>>>back to life. Any troubleshooting ideas before I break down and open
>>>my
>>>wallet for new one?
>
>

Regards, Joe Foor kf4dys@wfeca.net
http://www.wfeca.net/~kf4dys/books.html (got some books to trade?)

Global Warming: The natural process, by which the earth returns to it's
normal climate, in the aftermath of an ice age.

299. PICS

From: kd4emi@juno.com (Michael A Kantor)
Date: Fri, 10 Jul 1998 11:05:27 -0400
To: aprssig@tapr.org
Message-ID: <19980710.110723.3126.0.kd4emi@juno.com>
Rendered body type: text/plain

With the discussion about pics, I thought I would chime up.

These little devices are really workhorses. They have so many IO
functions, conversion abilities etc, that anyone who wants to "invent"
something really needs to
understand these things.

Take a look at some of the "fish wraps" to see what is being done with
them.

I have been home this week, playing with my lightning detector, and
interfacing it to the computer. This is not possible to do without these
little chips.

One note of advice, many of them have different abilities, try to learn
about the
most functional pic you can...I havent been keeping up , but I see that
there are a few
new ones available....Maybe Steve can tell us what reference he is using
to learn from scratch about these, so the rest of us can play and
learn...

I started with the old 6502 but have heard of some new Motorola devices
out...
any one want to comment ?
Mike KD4EMI@JUNO.COM

_____
You don't need to buy Internet access to use free Internet e-mail.
Get completely free e-mail from Juno at http://www.juno.com
Or call Juno at (800) 654-JUNO [654-5866]

300. Re: [APRSSIG:26141] Re: Peet Bros Problem

From: Keith Sproul <ksproul@rci.rutgers.edu>
Date: Fri, 10 Jul 1998 11:41:26 -0400
To: jeffb@espi.com
Cc: aprssig@tapr.org
Message-ID: <v04003a1ab1cbe662d311@[128.6.18.58]>
Rendered body type: text/plain

The weather problems are just about fixed..

I plan on getting Jeff Brenton and a couple of other people test versions
within a week or so, then if all is well, it will be released in the next
version...

Keith Sproul

>BordingK@aol.com wrote:
>> I just noticed that with their .01 wired gauge and WinAPRS2.20 my
>> station showed .80 rain in the last hour in the data block on the
>> screen next to my icon, but showed .08 in the weather list!
>
>"Old" problem in Win/MacAPRS (goes back a couple of versions, at least),
>reported by me to Keith a month or two ago, just before 2.2/3.2 shipped.
>
>When the gauge hits .10, the screen display will drop to zero... There
>is probably a mis-placed character in the mask that choses what gets
>displayed on the screen; should be fixed once the next version is ready.

>
>It ONLY affects the screen display, not the over-the-air stuff or logs.
>However, SOME weather stations do not broadcast rain figures, even
>though they show up on the screen - this, I feel, is a more serious
>problem. I know it affects the Heathkit stations, but not Davis, and
>I've heard people with certain Peet stations complain about it, too.
>
>--
>
>Jeff Brenton, Ham radio call KA9VNV
>http://www.espi.com
>Questionable web page: http://www.dididahdahdidit.com
>Covert supporter of the Vast Right Wing Conspiracy (tm)

Keith Sproul   ksproul@rci.rutgers.edu   WU2Z
Student Housing Network Coordinator   732 445-3695 W
Rutgers University Computing Services   732 821-4828 H

301. FD and APRS

From: GStory@icomply.com
Date: Fri, 10 Jul 1998 11:27:14 -0500
To: aprssig@tapr.org
Cc: kb2scs@worldnet.att.net
Message-ID: <F1C006463F86D111A7F900805FE2B3B3B9E8@lew_prods1.icomply.com>
Rendered body type: text/plain

John and the group, no matter how the contest falls next year, you can
count me in.
Guy Story, KC5GOI
kc5goi@infospeedway.net

302. Kantronics 8.2 multiline not a bug!

From: Jeff Brenton <jeffb@espi.com>
Date: Fri, 10 Jul 1998 11:54:51 -0500
To: aprssig <aprssig@tapr.org>
Cc: Digi Owners <digiowners@lounet.com>
Message-ID: <35A6475B.3126@espi.com>
Rendered body type: text/plain

It's amazing what happens when you have something set wrong...

FULLDUP ON will give the problem I reported overnight, where the
digipeater will start transmitting before an incoming multi-packet
transmission completes. I'd set it on per someone else's recommendation,
as a "fix" for something else....

Sorry for the mostly-false alarm!
--

Jeff Brenton, Ham radio call KA9VNV
http://www.espi.com
Questionable web page: http://www.dididahdahdidit.com
Covert supporter of the Vast Right Wing Conspiracy (tm)

303. NEW FORMATS testing

From: Bob Bruninga <bruninga@nadn.navy.mil>
Date: Fri, 10 Jul 1998 18:59:32 -0400 (EDT)
To: aprssig@tapr.org
Message-ID: <Pine.SOL.3.96.980710184207.15181B-100000@arctic>
Rendered body type: text/plain

Apparently all current versions of Mac/Win/+SA/DOS seem to work fine with
the new message format that I tested in APRSnew yesterday. APRSdos is
backwards compatible back to 797 and margnially back to 786. The new
OBJECT format test, however, was inconclusive because I was transmitting
both the new OBJ format and the new compressed format at the same time.

SO today, I posted a new APRSnew1.exe that will send OBJects in the new
OBJ format but using the existing posit format. So look now in the
Atlantic off the coast of SC and you should see my TEST1 and TEST2 boats.

If you do, then we can all begin to send the new message and object
formats and be backwards compatible with everyone...

bob WB4APR

304. Lost message

From: Claude Head <k5dtn@wans.net>
Date: Fri, 10 Jul 1998 18:23:55 -0500
To: aprssig@tapr.org, aprsplus@k8sn.org
Message-ID: <35A6A28B.750541BB@wans.net>
Rendered body type: text/plain

Hi, guys. I'm sure I saw a message here not too long ago which showed how to make some simple changes in some SA5 file which made the streets show up better on a laptop. I've looked and looked and can't find
it. If anyone still has it around, could you repost it to the SIG or sent it
privately to me? TIA.

73 Claude Head
K5DTN
k5dtn@wans.net

305. What I Did On My Summer Vacation

From: John Ackermann N8UR <jra@febo.com>
Date: Fri, 10 Jul 1998 19:40:12 -0400
To: aprssig@tapr.org
Message-ID: <199807102340.TAA13581@meow.febo.com>
Rendered body type: text/plain

Howdy --

Just got back from my trip (with daughter Allison) around Lake Erie and Lake Ontario. I ran APRS
the whole way, with the main idea being to see what the coverage of the APRServe network is.

To do this, I wrote programs to access both the Florida and Northern Illinois APRServe servers and capture all the packets from N8UR-9. As a backup, Steve K4HG agreed to do a data capture for me directly from the www.aprs.net machine. As near as I can tell, the local capture stayed up during the times we were driving, so the data should be complete, but I may have an update when I get Steve's data dump.

http://dayton.aprs.net/n8ur-trip.html is a javAPRS map that plots where N8UR-9 was heard via APRServe. The coverage area was not what I expected (note -- I'm talking here only about coverage via APRServe; there were several places that seemed to have good RF APRS coverage, but apparently no Internet feed).

I knew going in that there was nothing north of Dayton on I-75 until the Toledo/Detroit area, and I was right. But coverage on the Canadian shore of both lakes was surprisingly solid, while coverage on the US side of both was surprisingly uneven.

In the Niagara Falls area, coverage was absolutely solid on both the US and Canadian sides.

I was impressed with how far east coverage extended on the north shore of Lake Ontario; it carried me nearly to Kingston (though Kingston itself was a black hole). On the other hand, there was very little coverage on the south shore of either lake. Other than around Rochester, Sandusky, and Toledo, the southern shore of both lakes was empty (again, there was APRS activity in several places, including the Cleveland area, but apparently no one has an Internet feed running).

Other than the stretch from Dayton to Toledo, the biggest RF hole was around the east end of Lake Ontario and the Thousand Islands. The only place I heard any packets at all was from the top of the Thousand Islands Bridge, a couple of hundred feet above the water. I apparently did get a couple of packets through, probably during propagation peaks, and probably when I was on high ground.

One of the tourist sites in the Thousand Islands is the "SkyDeck" which is a 300+ foot tower with an elevator and observation deck. It sits in the middle of the channel on Hill Island, and it would be a *wonderful* place for a digi -- it would provide great coverage all around the east end of the lake and might even be in range of Rochester. (As far as I could tell, there are no antennas at all on top of the SkyDeck, just a flagpole.)

I received messages from several folks, but since the laptop was in the back seat of the car, I wasn't able to respond. I'll use this opportunity to say thanks to everyone who sent me a message while we were on the road.

When I get a chance over the next few days, I'll try to make a list of
the stations that saw me on the trip -- there were a significant number
doing callsign substitution, so although I don't have a complete list
of who heard me, I have quite a few and will add those to the trip page.

The biggest disappointment of the trip is that my laptop got seriously
sick on about the fifth day, and as a result I was not able to do a
complete capture of our route -- I have complete posit-every-5-seconds
records of my trips around Lakes Superior and Huron from previous
summers, but this year's trip has some big holes in it. Fortunately,
the dual port PicoPacket kicked in whenever the computer was dead, so
as far as I know I was sending posits via RF during the entire trip.

Finally, thanks to Steve for the APRServe network -- despite the holes,
it was pretty cool to see the trip develop on the javAPRS map. And, my
wife Jody, KC8KDC used map.aprs.net to keep track of us during the trip
-- she thought that was *really* neat!

73,
John N8UR
jra@febo.com
http://www.febo.com

306. Was about the "Little Rig"

From: VE3NEC@peel.com (John Langtry)
Date: Fri, 10 Jul 1998 20:41:40 -0400
To: aprssig@tapr.org
Message-ID: <35A6B4C4.59F7@peel.com>
Rendered body type: text/plain

Folks :

You don't know when you're well off; the Spring blooming
of those orange construction barrels and all ... just think
of us, up here in "the few frozen acres of wasteland";
we have only TWO seasons in Canada ... Winter and Construction !

Stop whining and count your blessings ! :>
vy 73 de John VE3NEC

--
John Langtry, VE3NEC
Credit Lodge # 219
905-873-8715
ve3nec@rac.ca
* * * * *

307. Re: Doppler systems doppler

From: Bob Merchant <KB8AST@mwweb.com>
Date: Fri, 10 Jul 1998 21:36:23 -0400
To: aprssig@tapr.org
Message-ID: <3.0.5.32.19980710213623.007dba90@MAIL.mwweb.com>
Rendered body type: text/plain

John Munsey, KB3GK, wrote:
> HELP !!!!
>
> has anyone interfaced the Doppler Systems doppler and a GPS to APRS? I am
> running VER 2.2.0.
>
> There are several problems. First APRS only accepts the Agrelo doppler
> data stream.. Dop Sys is different.
>
> Second the Dop Sys is 300 baud and can only be modified up to 2400. The
> GPS is at 4800 baud so if you use only one com port the doppler has to be
> raised to 4800 baud.
>
> Third is there a port adapter to combine the two signals and switch from
> one to the other saw every 5- 10 seconds?
>
> Thanks for any suggestions.
> My EMAIL is   munseyj@worldnet.att.net
>
>
> John Munsey, KB3GK
> Ormond Beach, Fl.
> munseyj@worldnet.att.net
>

>
 At one point in time, David VanHorn <dvanhorn@cedar.net> was working on an interface device which would allow all sorts of things to be connected to a single port laptop...with the interface device handling all the baud-rate problems and converting everything to a liveable baud-rate at the single com port on the laptop. The idea was to allow APRS to communicate at, say 9600 baud with the interface, and the interface would have several ports to gate in WX, RDF, GPS, packet traffic, and just about any other device we may think up in the future. I have not heard from Dave since Tue, 20 Jan 1998 at which time he had located some UART chips made by Maxim which he thought might the "thingy"...as we call it...more practical. He was in the mist of changing jobs, ISP's, and a few other things and I have not heard from him in since. Perhaps he is still on the SIG and he will update us all as to how things are progressing....

73, de Bob,
KB8AST@mwweb.com
KB8AST@KB8AST.#NEOH.OH.USA.NOAM
http://www.mwweb.com/kb8ast/kb8ast.htm
APRS approx. co-ord's: 4143.82N/08109.50W

308. Re: [APRSSIG:26151] Re: Doppler systems doppler

From: "David VanHorn" <dvanhorn@cedar.net>
Date: Fri, 10 Jul 1998 20:55:17 -0500
To: <KB8AST@mwweb.com>, <aprssig@tapr.org>
Message-ID: <025301bdac6e$f4a6e400$69f135ce@xenu>
Rendered body type: text/plain

Perhaps he is still on the SIG and he will update us all
>as to how things are progressing....

Still here. I haven't done much with it yet, but the pieces are all
available now.
The only part I can't do, is the APRS side. APRS would have to know my box
is on the serial port, and it would have to send and receive data with some
kind of addressed packet protocol.

There's really nothing standing in the way, and I have written the multiport
buffer
code that is central to this working properly.

My questions are, is there enough interest to justify writing the code, and
will the
APRS authours support it?

309. RE: [APRSSIG:26135] Results of APRS Field Day Contest

From: "Harry Burford" <hburford@airmail.net>
Date: Fri, 10 Jul 1998 21:04:01 -0500
To: <aprssig@tapr.org>
Message-ID: <000101bdac70$2c5192a0$716f6f6f@harryport>
Rendered body type: text/plain

I wouldn't be discouraged by the low feed back. From the looks of GOI's
score, there were at least 44 other stations participating that didn't
submit. Me for one. We watched 70+ possible APRS contacts (one way side of
an exchange) over the portion of the 24 hour period we operated packet at
the DFW club FD site at the Coppell EOC. I had 5 contacts alone at my
unattended home station. 3 were from GOI, QLD, and GLV I think. It was fun
just to watch all the activity here in N TX. I think GOI owes everyone in
the mail list an instructional explanation 'how to'.

Harry Burford, KA Ø TTY

-----Original Message-----
From: aprssig@tapr.org [mailto:aprssig@tapr.org] On Behalf Of John Blowsky
Sent: Friday, July 10, 1998 8:12 AM
To: aprssig@tapr.org
Subject: [APRSSIG:26135] Results of APRS Field Day Contest

HI All
      Here are the results of the APRS Contest that
we held during FD.

HIGHEST SCORE
KC5GOI Total Points 44

```
HIGHEST SCORES By software (listed in highest point order)
winAPRS  KC5GOI Total Points 44 kc5goi@infospeedway.net
APRSplus WB5QLD Total Points 41 mheskett@startext.net
APRSdos  KF4BYA Total Points 33 nick_k@geocities.com

SINGLE OPERATOR (SO)
KC5GOI Total Points 44 ARRL section unknown
WB5QLD Total Points 41 NTX
KF4BYA Total Points 33 NFL
WB4APR Total Points 32 MDC
KB5GLV Total Points 22 NTX
KB2SCS Total Points 22 NLI
VE3RC  Total Points 21 ONT
KE6AFE Total Points 20 SCV
KB0UZQ Total Points 15 MO
WA7NWP Total Points 5  WWA
N6FRI  Total Points 2  EAST BAY SECTION OF PACIFIC DIV
                       unattended low power

MULTI OPERATOR (MO)
W6APA  Total Points 12 LAX

Total stations submitted 12
All stations in separate ARRL sections except for the two
NTX stations.
No mobiles.

All in all a very good test of APRS under simulated
emergency conditions.
My only disappointment is that too few stations submitted their
reports.

Please spread these results to those who are not on the
APRSsig in your area.

I hope that the ARRL reinstates 2m FM packet as a viable form
of communication in next years FD. If not, then I hope we
do what we did this year. I am defiantly willing to
tabulate the results again.

Let us hope we never witness the "Silence Of The Hams"
73 DE John  KB2SCS
   AmprNet:     kb2scs@kb2scs.ampr.org [44.68.8.173]
   Mail To:     kb2scs@groucho.kc2ky.ampr.org [44.68.8.4]
   E-Mail:      kb2scs@worldnet.att.net
```

310. APRS/Field Day experience

```
From: Nick <nick_k@geocities.com>
Date: Fri, 10 Jul 1998 23:44:42 -0400
To: APRSSIG <aprssig@tapr.org>
Message-ID: <35A6DFAA.E5C6385F@geocities.com>
Rendered body type: text/plain
```

I also had a blast playing with APRS on field day!

That saturday while I was packing some supplies to take to the site I decided to take my 286 laptop, tnc, and htx-202 radio to field day in case anyone wanted to play around with packet. I never intended to run APRS the whole weekend, let alone participate seriously in the contesting!

This field day we had a local boy scout troop stay with us the weekend so they could earn their radio merit badges. I thought it would be cool to have packet/aprs running to show to them and other club members. Once I got it running (I ran it under our club FD call, N4EH) I saw the CQ calls and dug out the aprs field day 'hints' sheet that I had printed out from the sig. As people were walking around looking at the different operations I ended up answering questions while trying to make contacts on APRS. A couple of the 'older' members of the club hung around the packet/APRS station asking question after question (I guess they thought I knew what I was doing since I'm a teenager and was working on a computer!) Although I did let them think that. :) It was fun zooming out to the U.S. map and showing them some stations that had popped up in Texas, Arizona and the Northeast. With this hobby dating back a long time and me being young and a 'new ham' (compared to most of them) it was kind of fun introducing them to a 'new' facet of Amateur Radio.

Back to the contesting part though......as evening approached I began to think of when I should go home to get some sleep, but, people kept

calling CQ FD so of course, I had to answer! It got later and later and I was starting to get a little tired (yes, even us 'youngsters' get worn out sometimes). I'd start to lay down on the table's bench sit (we operated at a park pavilion) when the APRS screen would switch to the message screen with a new contact asking for my exchange information. So I'd get up, answer them, and then lay back down. It seemed like I was getting up every 15 minutes at one point and the longest I stayed down was about 45 minutes. I also enjoyed having a nice conversation with another APRS station when activity was slow in the early morning hours, and with the excellent work of the IGATES it didn't seem like the other station was in Texas!

I figured I might as well stay up the rest of the night so I could operate on the voice station (during the day it was hard to squeeze in time there since it was so busy). The people who didn't say up missed out on a lot though. I had a blast making contacts on HF with some good band conditions on 15 and 20 meters. I'm only a Tech so I really enjoyed working HF.

Overall it was fun and at least one new person is getting on APRS since our Field Day activities. Next year I look forward to participating in the APRS 'portion' of FDay (if the ARRL doesn't change anything). I look forward to seeing you all on the air!!

73,
Nick KF4BYA
nick_k@geocities.com
Lake Monroe Amateur Radio Society
http://www.qsl.net/lmars/
--
ICQ# 12966558
Page me at: http://wwp.mirabilis.com/12966558

311. Re: [APRSSIG:26143] PICS

From: Steve Dimse K4HG <k4hg@tapr.org>
Date: Sat, 11 Jul 1998 06:13:39 -0400
To: <kd4emi@juno.com>, "aprssig" <aprssig@tapr.org>
Message-ID: <199807111013.FAA04941@tapr.org>
Rendered body type: text/plain

On 7/10/98 11:25 AM Michael A Kantor (kd4emi@juno.com) wrote:

>One note of advice, many of them have different abilities, try to learn
>about the
>most functional pic you can...I havent been keeping up , but I see that
>there are a few
>new ones available....Maybe Steve can tell us what reference he is using
>to learn from scratch about these, so the rest of us can play and
>learn...
>
The best book I've found is "Programming and Customizing the PIC Microcontroller" by Myke Predko, ISBN 0-07-913646-X, available from Amazon.

The Microchip web site, http://www.microchip.com, is an indespensible source of info on the chips, with hundereds of MBs of downloads, mostly in the for of PDF's...things like appnotes and data sheets. You can get the whole schbang on a CD, and if you need the hardcopy you can buy it for a nominal amount.

Steve K4HG

312. BN# Bulls instead of BLN#

From: kd4ydc@juno.com (Robert W Burton)
Date: Sat, 11 Jul 1998 06:46:06 -0400
To: aprssig@tapr.org
Message-ID: <19980711.064609.9038.0.KD4YDC@juno.com>
Rendered body type: text/plain

Is there another way of sending bulls instead of the BLN# and BLNZ.
I keep seeing a couple of people sending BN#'s at my station and
at the station in the NWS in Peachtree City. No big deal but everytime
the BN's come across NWSPTC prints out those lines and sends
false reports to them. Each time....a 3" red light flashes and
a buzzer (realy loud too) goes off. This is happening a couple
of times a week! I NEED THE EMAIL ADDRESS OF
KD1QS...anyone know????

Robert Burton

KD4YDC
AEC ARES / NWS in Peachtree City
GA SKYWARN

_____
You don't need to buy Internet access to use free Internet e-mail.
Get completely free e-mail from Juno at http://www.juno.com
Or call Juno at (800) 654-JUNO [654-5866]

313. Re: [APRSSIG:25791] APRS and LINUX

From: KB9JJA aprs Account <aprs@thekeep.mcs.accessus.net>
Date: Sat, 11 Jul 1998 07:00:42 -0500 (CDT)
To: Basil Davoren <b.davoren@clear.net.nz>
Cc: aprssig@tapr.org
Message-ID: <Pine.LNX.3.93.980711070009.11712B-100000@thekeep.mcs.accessus.net>
Rendered body type: text/plain

Any word on when APRS for Linux will be out!

73's de kb9jja/dale

On Sun, 28 Jun 1998, Basil Davoren wrote:

> There is a very interesting article on GPS,APRS and LINUX, written by
> Richard Parry in the July issue of the LINUX JOURNAL.
>
> Regards
> Basil,ZL2UT
> b.davoren@clear.net.nz
>

314. NY area only. Others disregard

From: Ralph Fowler <rwf@BSRG.org>
Date: Sat, 11 Jul 1998 10:00:27 -0400
To: aprssig@tapr.org
Message-ID: <199807111400.KAA26905@cocacola-bh.cokecce.com>
Rendered body type: text/plain

I'm headed back to New York tomorrow (Sunday) the 12th.
Expect to stay through the 23rd or so.

This time, my stay will be in Long Island, near Hauppauge again- with
opportunity to meet up or go somewhere further away during next weekend.

I'll have the dual port Pico-Packet APRS station with me, and will try to
operate laptop mobile as I can, but the trip from Office to Hotel isn't all
that long in duration. Its call is N4NEQ-15. When the computer is not
there, I will be a stand-alone tracker.

Flying commercial this time, so no chance for air mobile. Sorry.

I listen a lot to the WECA repeater, but on LI, it isn't able to get
through the pager intermod that my new Icom 207 picks up constantly. I'll
be taking my PAR filter this time. If you have a suggestion of a good 440
machine and a good 2M machine for LI, please send it along.

Get in touch if you see me- I'm always looking for new BBQ restaurants.

315. Re: [APRSSIG:26147] NEW FORMATS testing

From: Cap Pennell <cap@cruzio.com>
Date: Sat, 11 Jul 1998 11:47:48 -0700
To: aprssig@tapr.org
Message-ID: <3.0.5.32.19980711114748.007e0980@mail.cruzio.com>
Rendered body type: text/plain

At 06:02 PM 7/10/98 -0500, Bob Bruninga wrote:
>Apparently all current versions of Mac/Win/+SA/DOS seem to work fine with
>the new message format that I tested in APRSnew yesterday. APRSdos is
>backwards compatible back to 797 and margnially back to 786.

As you know, APRSdos 796 (or earlier) does not ACK messages that are using the new message format (as is
 being used by APRS+SA).

73, Cap KE6AFE
--
Cap Pennell
Santa Cruz, CA 95062-1002   3658.93N/12200.91W [CM86xx]
email: cap@cruzio.com   home page: http://members.cruzio.com/~cap

packet radio: KE6AFE @ki6eh.#wcca.ca.usa.noam

316. FD Results

From: "Guy Story, KC5GOI" <kc5goi@infospeedway.net>
Date: Sat, 11 Jul 1998 14:30:39 -0500
To: "APRSSIG" <aprssig@tapr.org>
Message-ID: <01bdad02$62fc8ca0$66cf2bcf@guy->
Rendered body type: text/plain

Okay Harry twisted my arm a bit. Wish I could say that my results were due to something all that great but they were not. I operated form start time to finish time. Took a nap at about 6 to 730 am when the activity seemed to be at the smallest amout. Mainly just persistance is how I got the contacts. After the event was over I had time to look at the problems I had and realized that I had missed possibly 6 more stations due to a very high retry rate between my IGATE and the FD site. There were times I could ping my station nearly instantly and other times that it would try out. The FD site was seven miles away but there is a hill inbetween the two locations. That may have been why the retry was so bad. Until last friday we did not have a digi in Denton County so I did not have that to use. I do have this to say about my IGATE, it helps to turn off the time out timer on the internet connection so the modem does not disconnect. Forgot to do it and after 30 minutes I lost my connection. Took longer to drive across Denton than it did to fix. Not much to talk about, sent out CQFD every so often and tried to answer every station I got requests from.
Good luck to everyone next year. I am going to try for 2 in a row and should be able to fix my problems, that way I can have Murphy mess with me in other ways.
73
Guy Story, KC5GOI
Silver Dome Mobile Pk. # 79
Denton Texas, 76208
940.243.0754
kc5goi@infospeedway.net
www.infospeedway.net/~kc5goi/home.htm

317. Lightning

From: kd4emi@juno.com (Michael A Kantor)
Date: Sat, 11 Jul 1998 16:46:30 -0400
To: aprssig@tapr.org
Message-ID: <19980711.164631.10630.2.kd4emi@juno.com>
Rendered body type: text/plain

I was thinking about the pics I have laying around here since Steve has been talking about them recently and thought it would be fun to try and play again with the lightning
detector...

Well, I guess when you leave something alone for a while and come back to it, sometimes good things happen. Ive got it working quite well now, sending data to the tnc.
Here is the question.... With all the APRS versions out there, what string should I send to send out a lightning alert with a radius of lets say 50 miles.
With SA4 all I have to do is tell everyone to have a "string" in the detect string box, but there are other versions

What is the best string to send to cause an "alarm" on all versions for local lightning?

Mike KD4EMI@JUNO.COM

_____
You don't need to buy Internet access to use free Internet e-mail.
Get completely free e-mail from Juno at http://www.juno.com
Or call Juno at (800) 654-JUNO [654-5866]

318. Doppler Sys doppler... APRS 2.2.0

From: "John Munsey, KB3GK" <munseyj@worldnet.att.net>
Date: Sat, 11 Jul 1998 17:24:54 -0400
To: aprssig@tapr.org
Message-ID: <3.0.32.19980711172429.0068ff54@postoffice.worldnet.att.net>
Rendered body type: text/plain

Keith, I am just wondering.... if I connect the Doppler Sys to one port and the GPS to another and set them correctly I can read either data stream in the Term. program. Also, depending on Murphy, one or the other will show at the bottom of PMAP. The data is printed in a single line.

Since it is that close to working why wont it print LOB's on the map???????

I have tried manual switching but no luck. I have tried them both on the
same port... No luck.

Hope my previous note was not too long.

Thanks,

John Munsey, KB3GK
Ormond Beach, Fl.
munseyj@worldnet.att.net

319. WinAPRS Auto-Scroll?

From: "Jerry Rector" <jerryr@gate.net>
Date: Sat, 11 Jul 1998 18:49:02 -0400
To: <aprssig@tapr.org>
Message-ID: <199807112248.SAA57294@chickasaw.gate.net>
Rendered body type: text/plain

I am running WinAPRS 2.2.0 with Chicago Maps PM 3.0.

I've set my home station to display Tracked stations only,
and Auto Scroll Moving Maps.

In the mobile, running a GPS II+ and PicoPacket.

My mobile (a -13) displays at the home QTH just fine,
and the location follows perfectly....however....I cannot
get the map to 'auto-scroll', so I run off the map.

Does auto-scroll work, and if so, what am I doing wrong?

Jerry, KB4OAM
mailto:jerryr@gate.net
http://members.tripod.com/kb4oam

begin 666 ATT00002.htm
M/"%$3T-465!%($A434P@4%5"3$E#("(M+R]7,T,O+T141"!7,R!(5$U,+R]%
M3B(^#0H\2%1-3#X-"CQ(14%$/@T*/$U%5$$@2%144"U%455)5CTB0V]N=&5N
M="U4>7!E(B!#3TY414Y4/2)T97AT+VAT;6P[(&-H87)S970]:7-O+3@X-3DM
M,2(^#0H-"@T*#0H\345402!C;VYT96YT/2<B35-(5$U,(#4N,# N,#4Q."XW
M(B<@;F%M93U'14Y%4D%43U(^#0H\+TA%040^#0H\0D]$62!B9T-O;&]R/2-F
M9F9F9F8^#0H\1$E6/CQ34$%.(&-L87-S/3@U.#,S-#$R,BTQ,3 W,3DY.#X\
M1D].5"!C;VQO<CTC,# P,# P(&9A8V4]07)I86P@<VEZ93TR/DD@86T@#0IR
M=6YN:6YG(%=I;D%04E,@,BXR+C @=VET:"!#:&EC86=O($UA<',@4$T@,RXP
M+CPO1D].5#X\+U-004X^/"]$258^#0H-"CQ$258^/%-004X@8VQA<W,].#4X
M,S,T,3(R+3$Q,#<Q.3DX/CQ&3TY4(&-O;&]R/2,P,# P,# @9F%C93U!<FEA
M;" -"G-I>F4],CX\+T9/3E0^/"]34$%./B9N8G-P.SPO1$E6/@T*#0H\1$E6
M/CQ34$%.(&-L87-S/3@U.#,S-#$R,BTQ,3 W,3DY.#X\1D].5"!C;VQO<CTC
M,# P,# P(&9A8V4]07)I86P@<VEZ93TR/DDG=F4@#0IS970@;7D@:&]M92!S
M=&%T:6]N('1O(&1I<W!L87D@5')A8VME9"!S=&%T:6]N<R!O;FQY+#PO1D].
M5#X\+U-004X^/"]$258^#0H-"CQ$258^/%-004X@8VQA<W,].#4X,S,T,3(R
M+3$Q,#<Q.3DX/CQ&3TY4(&-O;&]R/2,P,# P,# @9F%C93U!<FEA;"!S:7IE
M/3(^86YD(T*075T;R!38W)O;&P@36]V:6YG($UA<',N/"]&3TY4/CPO4U!!
M3CX\+T1)5CX-"@T*/$1)5CX\4U!!3B!C;&%S<STX-3@S,S0Q,C(M,3$P-S$Y
M.3@^/$9/3E0@8V]L;W(](S P,# P,"!F86-E/4%R:6%L(T*<VEZ93TR/CPO
M1D].5#X\+U-004X^)FYB<W [/"]$258^#0H-"CQ$258^/%-004X@8VQA<W,]
M.#4X,S,T,3(R+3$Q,#<Q.3DX/CQ&3TY4(&-O;&]R/2,P,# P,# @9F%C93U!
M<FEA;"!S:7IE/3(^26X@=&AE(T*;6]B:6QE+"!R=6YN:6YG(&$@1U!3($E)
M*R!A;F0@4&EC;U!A8VME="X\+T9/3E0^/"]34$%./CPO1$E6/@T*#0H\1$E6
M/CQ34$%.(&-L87-S/3@U.#,S-#$R,BTQ,3 W,3DY.#X\1D].5"!C;VQO<CTC
M,# P,# P(&9A8V4]07)I86P@#0IS:7IE/3(^/"]&3TY4/CPO4U!!3CXF;F)S
M<#L\+T1)5CX-"@T*/$1)5CX\4U!!3B!C;&%S<STX-3@S,S0Q,C(M,3$P-S$Y
M.3@^/$9/3E0@8V]L;W(](S P,# P,"!F86-E/4%R:6%L('-I>F4],CY->2 -
M"FUO8FEL92 H82 M,3,I(&1I<W!L87ES(&%T('1H92!H;VUE(%%42"9N8G-P
M.R!J=7-T(&9I;F4L/"]&3TY4/CPO4U!!3CX\+T1)5CX-"@T*/$1)5CX\4U!!
M3B!C;&%S<STX-3@S,S0Q,C(M,3$P-S$Y.3@^/$9/3E0@8V]L;W(](S P,# P
M,"!F86-E/4%R:6%L('-I>F4],CYA;F0@#0IT:&4@;&]C871I;VX@9F]L;&]W
M<R!P97)F96-T;'DN+BXN:&]W979E<BXN+BY)(&-A;FYO=#PO1D].5#X\+U-0
M04X^/"]$258^#0H-"CQ$258^/%-004X@8VQA<W,].#4X,S,T,3(R+3$Q,#<Q
M.3DX/CQ&3TY4(&-O;&]R/2,P,# P,# @9F%C93U!<FEA;"!S:7IE/3(^9V5T
M(T*=&AE(&UA<"!T;R G875T;RUS8W)O;&PG+"!S;R!)(')U;B!O9F8@=&AE
M(&UA<"X\+T9/3E0^/"]34$%./CPO1$E6/@T*#0H\1$E6/CQ34$%.(&-L87-S
M/3@U.#,S-#$R,BTQ,3 W,3DY.#X\1D].5"!C;VQO<CTC,# P,# P(&9A8V4]
M07)I86P@#0IS:7IE/3(^/"]&3TY4/CPO4U!!3CXF;F)S<#L\+T1)5CX-"@T*

```
M/$1)5CX\4U!!3B!C;&%S<STX-3@S,S0Q,C(M,3$P-S$Y.3@^/$9/3E0@8V]L
M;W(](S P,# P,"!F86-E/4%R:6%L('-I>F4],CY$;V5S( T*875T;RUS8W)O
M;&P@=V]R:RP@86YD(&EF('-O+"!W:&%T(&%M($D@9&]I;F<@=W)O;F<_/"]&
M3TY4/CPO4U!!3CX\+T1)5CX-"@T*/$1)5CX\4U!!3B!C;&%S<STX-3@S,S0Q
M,C(M,3$P-S$Y.3@^/$9/3E0@8V]L;W(](S P,# P,"!F86-E/4%R:6%L( T*
M<VEZ93TR/CPO1D].5#X\+U-004X^)FYB<W [/"]$258^#0H\+T)/1%D^/"](
&5$U,/@T*
`
end
```

320. test, dont read

From: n8exf@juno.com (R L BOEHM)
Date: Sun, 12 Jul 1998 03:50:34 -0400
To: aprssig@tapr.org
Message-ID: <19980712.035034.15374.0.N8EXF@juno.com>
Rendered body type: text/plain

unless you reallllly want to. no new mail in 2 day! odd indeed.
73 de Bob, N8EXF // KN
homepage   http://www.qsl.net/n8exf

Igloos are polar bear snacks, crunchy on the outside, warm and chewy on
the inside.

_____
You don't need to buy Internet access to use free Internet e-mail.
Get completely free e-mail from Juno at http://www.juno.com
Or call Juno at (800) 654-JUNO [654-5866]

321. lightning detector

From: kd4emi@juno.com (Michael A Kantor)
Date: Sun, 12 Jul 1998 04:14:32 -0400
To: aprssig@tapr.org
Message-ID: <19980712.041433.3158.1.kd4emi@juno.com>
Rendered body type: text/plain

I've been working on this for about a year on and off.
With Steve talking about his pics, I thought I'd take my stuff back out
of storage.

It's a store brand lightning detector interfaced to a pic. (cost about
$150-$250 for detector and 25 in parts and pic)

I'll eventually produce the interface box for everyone and they can buy
the lightning
detector at the stores and modify them.   I use it now to shut off my
computer before a storm is too close.

I had some problems with the pic reading the data and then sending a
string to the TNC
Would prefer having it go directly to computer and have software control
over it.

Once I get the word on what APRS string to send I'll put the thing on
line.
I am off the air tomorrow , as I am testing my HT APRS set up. Having
some problems getting the WIN CE to talk to the TNC while in GPS mode...

I had hoped to have a hand held portable with the WINCE machine but it
might end up a stand alone tracker and HT. Then the battery (s) on my HT
that I new use wont charge.. Lots going on here at the shack this week.

Too many things going on at same time

I think there are a few guys with web space, maybe will scan a picture or
two and let them put it on their web sites with some details of detector

All the detector does is read which light is on (on) the detector. (3
lights indicate distance to lightning) Then that data is read by the pic,
which sends the data to the TNC and changes the beacon or turns the XMIT
on function (and the beacon is pre-done)...I haven't figured out which
way will be best.
Very straight forward. Need to make it aprs friendly now.

I am also starting a new job Monday and things are becoming a juggling
act right now, so please be patient - I promise plans soon--

MIke KD4EMI@JUNO.COM

_____
You don't need to buy Internet access to use free Internet e-mail.
Get completely free e-mail from Juno at http://www.juno.com
Or call Juno at (800) 654-JUNO [654-5866]

322. Re: [APRSSIG:26152] Re: Doppler systems doppler

From: Bob Merchant <KB8AST@mwweb.com>
Date: Sun, 12 Jul 1998 07:20:32 -0400
To: dvanhorn@cedar.net, aprssig@tapr.org
Message-ID: <3.0.5.32.19980712072032.00819dc0@MAIL.mwweb.com>
Rendered body type: text/plain

At 09:04 PM 7/10/98 -0500, you wrote:
>
>The only part I can't do, is the APRS side. APRS would have to know my box
>is on the serial port, and it would have to send and receive data with some
>kind of addressed packet protocol.
>
>There's really nothing standing in the way, and I have written the multiport
>buffer
>code that is central to this working properly.
>
>My questions are, is there enough interest to justify writing the code, and
>will the
>APRS authors support it?
>
  I really don't know how the "kiss" format works, but if they made it an
option, perhaps that might solve the communication problem. As for expense,
what are we discussing as far as "schematic" verses "kit" verses
"plug-n-play" expense? If this were made modular..where the addition of
UARTs would permit expansion of the system..with a basic system permitting,
say,
tnc, home Wx station, and rdf/gps ports?
73, de Bob,
KB8AST@mwweb.com
KB8AST@KB8AST.#NEOH.OH.USA.NOAM
http://www.mwweb.com/kb8ast/kb8ast.htm
APRS approx. co-ord's: 4143.82N/08109.50W

323. Re: [APRSSIG:26166] Re: Doppler systems doppler

From: Wes Johnston <kd4rdb@eagnet.com>
Date: Sun, 12 Jul 1998 09:15:41 -0400
To: KB8AST@mwweb.com, aprssig@tapr.org
Message-ID: <3.0.32.19980712091539.0070941c@gena>
Rendered body type: text/plain

The KISS protocol is pretty simple. What makes kiss look so intimidating
in our case (packet radio) is that when you look at a KISS frame, you see
the data as it is to be sent over the air - the callsigns are shifted one
bit left, there are all sorts of flags in there, and then your data. It
can address up to 16 ports within a device. Each packet of information
headed to a KISS device begins and ends with the byte 192 (CO in hex). The
second byte contains the port number, and the third byte contains the data.
 (I've left out some trivial details for simplification). So aside from
the first 3 bytes and the last byte, a kiss frame contains exactly the data
you wish passed along. Using such a scheme to address multiple serial
ports off a "black box" would not require that the TNC be in kiss mode.
The black box could recieve data from the PC in kiss format, strip away the
kiss part, select a serial port, and pass the data to the correct serial
port. It would be interesting to use KISS in the application of a
multiplexed serial port, but unnecessary in our application. Data needs to
come into the serial port from many sources - gps, wx station, tnc, doppler
finder. But aside from configuration, you never need to talk to these
devices. Since aprs can accept any data it sees onthe serial port, you
need a device that can monitor several uarts, convert the baud rate if
needed, and send the data recieved to the PC serial port. Data from the
PC's serial port would always goto the TNC.

At 06:22 AM 7/12/98 -0500, you wrote:
> I really don't know how the "kiss" format works, but if they made it an
>option, perhaps that might solve the communication problem. As for expense,
>what are we discussing as far as "schematic" verses "kit" verses
>"plug-n-play" expense? If this were made modular..where the addition of
>UARTs would permit expansion of the system..with a basic system permitting,
>say,
>tnc, home Wx station, and rdf/gps ports?
>73, de Bob,

>KB8AST@mwweb.com
>KB8AST@KB8AST.#NEOH.OH.USA.NOAM
>http://www.mwweb.com/kb8ast/kb8ast.htm
>APRS approx. co-ord's: 4143.82N/08109.50W
>
>
Wes
Email: mailto:kd4rdb@usa.net
APRS: http://www.qsl.net/kd4rdb/aprs.htm
A good traveler has no fixed plans and is not intent on arriving.

324. Meteor scatter????

From: Steve Dimse K4HG <k4hg@tapr.org>
Date: Sun, 12 Jul 1998 12:51:10 -0400
To: "aprssig" <aprssig@tapr.org>
Message-ID: <199807121651.LAA28473@tapr.org>
Rendered body type: text/plain

Copied this off the APRServe stream:

K4HG-13>BEACON,W1TOM-15,WIDE,N1RHN-15*/V:!2439.65N/08128.90W_Testing
WeatherPIC!!!

K4HG-13 is the WX PIC weather station, running 170 watts at 30 feet, near
Key West (100 miles from nearest digi). The path from there to W1TOM-15
is about 1300 miles!

Any meteor showers in town?

Steve K4HG

325. Re: [APRSSIG:26165] lightning detector

From: kd4emi@juno.com (Michael A Kantor)
Date: Sun, 12 Jul 1998 13:29:15 -0400
To: schiers@netins.net
Cc: aprssig@tapr.org
Message-ID: <19980712.132916.3334.0.kd4emi@juno.com>
Rendered body type: text/plain

On Sun, 12 Jul 1998 06:43:17 -0500 "schiers" <schiers@netins.net> writes:
>Mike,
>
>What unit did you buy, where did you buy it?
It is a lightning systems unit purchased at US Marine supply store.
You wear it on your hip like a radio.

>How do you feel about it's basic performance?
Adaquate for my needs, Im not a wx man...just need very local events.

>Where do you mount the sensor, how far away from your computer? Did
>they
>provide some sort of software? Does it require an interface card, or
>does it
>simply connect to the serial port?
No software or interface card, the tnc is the interface card. If I figure
out the ports on the computer, I can get it to send data like a hsp unit
and share port with the
tnc..

I got an offer to for a web site, so tomorrow after I finish with EMI-3
will take a few pictures and get it on the web.
But still no idea how to make the string adaquate.
Those using APRSA can do it no problem, its the others....(dos winaprs
etc)
(imbeded string)
It is going off right now !

There are only a couple of SA4 users here in south florida ??

Mike KD4EMI

>Thanks, 73
>
>

_____
You don't need to buy Internet access to use free Internet e-mail.
Get completely free e-mail from Juno at http://www.juno.com

Or call Juno at (800) 654-JUNO [654-5866]

326. Re: [APRSSIG:26152] Re: Doppler systems doppler

From: "David VanHorn" <dvanhorn@cedar.net>
Date: Sun, 12 Jul 1998 12:36:44 -0500
To: <aprssig@tapr.org>, "Bob Merchant" <KB8AST@mwweb.com>
Message-ID: <008c01bdadbb$a49d3e20$88f135ce@xenu>
Rendered body type: text/plain

> I really don't know how the "kiss" format works, but if they made it an
>option, perhaps that might solve the communication problem. As for expense,
>what are we discussing as far as "schematic" verses "kit" verses
>"plug-n-play" expense? If this were made modular..where the addition of
>UARTs would permit expansion of the system..with a basic system permitting,
>say,
>tnc, home Wx station, and rdf/gps ports?

KISS won't help me. :(The basic problem is that the data in both directions
has to be flagged as to which port it is to/from. Once I have that going, it's no
problem at all..

One option would be to preface every byte with a destination/source so it looks like
this:

<01><55><02><AA>

The 55 byte goes to port 1 and the AA byte goes to port two. On the APRS side, this
would tell APRS which port the data came from.

The only difficulty with this, is that it's easy to loose sync, and take the data for a
port #. I can sanity-check the data though, so it's better than it looks at first glance.

The other way is to use packets of variable length, with some simple wrapper
like <STX><01>DATA<ETX> In this case "DATA" would be sent to/from port 1
There would have to be a maximum length on the packets, but the minimum could
be one byte.

The beauty of this approach is that devices connected through the system would not
know that anything was different, they just work like they always do.
In APRS, the incoming streams would be put in FIFO buffers, and then the main
APRS code would take the bytes as if they came in on real serial ports.

The biggest expenses (as always) are the PCB and the enclosure. The rest is
pretty cheap, as it's jsut a uP and UARTS.

327. aprs.rutgers.edu down?

From: Earl Needham <kd5xb@amsat.org>
Date: Sun, 12 Jul 1998 12:49:11 -0600
To: aprssig@tapr.org
Message-ID: <3.0.3.32.19980712124911.009aa2d0@mail.pdrpip.com>
Rendered body type: text/plain

I've tried for several days to get to http://aprs.rutgers.edu. It appears
to be down. Is it just me?

        Thanks es 7 3
        Earl

Earl Needham, KD5XB   mailto:KD5XB@AMSAT.ORG
Clovis, New Mexico   DM84 N34.403 W103.334
Registered: APRS/DOS & WinAPRS

328. Re: [APRSSIG:26171] aprs.rutgers.edu down?

From: Steve Dimse K4HG <k4hg@tapr.org>
Date: Sun, 12 Jul 1998 15:26:08 -0400
To: <kd5xb@amsat.org>, "aprssig" <aprssig@tapr.org>
Message-ID: <199807121926.OAA06682@tapr.org>
Rendered body type: text/plain

On 7/12/98 2:55 PM Earl Needham (kd5xb@amsat.org) wrote:

>   I've tried for several days to get to http://aprs.rutgers.edu. It appears
>to be down. Is it just me?
>
The computer is up, and the ftp server works, just the http server seems
to be dead.

Steve K4HG

329. APRS Messages

From: JDWalkerJr@aol.com
Date: Sun, 12 Jul 1998 16:37:20 EDT
To: aprssig@tapr.org
Message-ID: <378d4bec.35a91e81@aol.com>
Rendered body type: text/plain

I'm having trouble getting the full text of messages sent via APRS. I can get
four or five words of the messages but never a complete one. Sometimes, I get
repeats of messages with a slightly longer amount of the text, never all of
it.

I'm thinking it has something to do with TNC settings but my manual doesn't
give much hope for a solution. I wonder if anyone is using my setup and might
share TNC settings with me or suggest some other solution to the problem.

I'm using APRSW with Windows 95. I have an old AEA PK-232 TNC upgraded with
firmware to about 1991.

Thanks in advance for the help.

Jimmy Walker
WA4ILO
Macon, GA

330. Re: [APRSSIG:26172] Re: aprs.rutgers.edu down?

From: Cap Pennell <cap@cruzio.com>
Date: Sun, 12 Jul 1998 14:04:50 -0700
To: aprssig@tapr.org
Message-ID: <3.0.5.32.19980712140450.007dd310@mail.cruzio.com>
Rendered body type: text/plain

I'm glad to hear the rutgers ftp server is still up, but I wish the current versions of MacAPRS and
WinAPRS were also posted at tapr.org like the other flavors of APRS are. Makes a good "backup".
73, Cap KE6AFE

At 02:29 PM 7/12/98 -0500, Steve Dimse K4HG wrote:
>On 7/12/98 2:55 PM Earl Needham (kd5xb@amsat.org) wrote:
>
>>   I've tried for several days to get to http://aprs.rutgers.edu. It appears
>>to be down. Is it just me?
>>
>The computer is up, and the ftp server works, just the http server seems
>to be dead.
>
>Steve K4HG
--
Cap Pennell
Santa Cruz, CA 95062-1002   3658.93N/12200.91W [CM86xx]
email: cap@cruzio.com   home page: http://members.cruzio.com/~cap
packet radio: KE6AFE @ki6eh.#wcca.ca.usa.noam

331. Re: Doppler systems doppler

From: jcwren@atlanta.com (John "Chris" Wren)
Date: Sun, 12 Jul 1998 21:44:49 GMT
To: aprssig@tapr.org
Message-ID: <35b12dab.316625703@smtp.atlanta.com>
Rendered body type: text/plain

Why bother with this much trouble if you're not going with a
full KISS implementation? Why not wrap the message to each device
with a unique header byte, a port destination byte, 2 bytes of length,
and a closing byte? Have the PIC strip everything else off, send it

to the correct port, and use the closing byte to verify everything
went OK (although, if you *do* send binary this way, it would be
proper to escape any of the start/closing bytes to prevent
falsing...)

        This could be done in an 8031 with less than 1K of code...
Dunno about code density in a PIC...

        - Chris, KD4DTS

On Sun, 12 Jul 1998 08:23:39 -0500 (CDT), you wrote:

>The KISS protocol is pretty simple. What makes kiss look so intimidating
>in our case (packet radio) is that when you look at a KISS frame, you see
>the data as it is to be sent over the air - the callsigns are shifted one
>bit left, there are all sorts of flags in there, and then your data. It
>can address up to 16 ports within a device. Each packet of information
>headed to a KISS device begins and ends with the byte 192 (CO in hex). The
>second byte contains the port number, and the third byte contains the data.
> (I've left out some trivial details for simplification). So aside from
>the first 3 bytes and the last byte, a kiss frame contains exactly the data
>you wish passed along. Using such a scheme to address multiple serial
>ports off a "black box" would not require that the TNC be in kiss mode.
>The black box could recieve data from the PC in kiss format, strip away the
>kiss part, select a serial port, and pass the data to the correct serial
>port. It would be interesting to use KISS in the application of a
>multiplexed serial port, but unnecessary in our application. Data needs to
>come into the serial port from many sources - gps, wx station, tnc, doppler
>finder. But aside from configuration, you never need to talk to these
>devices. Since aprs can accept any data it sees onthe serial port, you
>need a device that can monitor several uarts, convert the baud rate if
>needed, and send the data recieved to the PC serial port. Data from the
>PC's serial port would always goto the TNC.
>
>
>
>At 06:22 AM 7/12/98 -0500, you wrote:
>> I really don't know how the "kiss" format works, but if they made it an
>>option, perhaps that might solve the communication problem. As for expense,
>>what are we discussing as far as "schematic" verses "kit" verses
>>"plug-n-play" expense? If this were made modular..where the addition of
>>UARTs would permit expansion of the system..with a basic system permitting,
>>say,
>>tnc, home Wx station, and rdf/gps ports?
>>73, de Bob,
>>KB8AST@mwweb.com
>>KB8AST@KB8AST.#NEOH.OH.USA.NOAM
>>http://www.mwweb.com/kb8ast/kb8ast.htm
>>APRS approx. co-ord's: 4143.82N/08109.50W
>>
>>
>Wes
>Email: mailto:kd4rdb@usa.net
>APRS: http://www.qsl.net/kd4rdb/aprs.htm
>A good traveler has no fixed plans and is not intent on arriving.
>

John "Chris" Wren, KD4DTS
jcwren@atlanta.com
770-945-8288 (H)
770-840-9200 x2417 (W)

By US Code Title 47, Sec.227(a)(2)(B), a computer/modem/printer
meets the definition of a telephone fax machine. By Sec.227(b)
(1)(C), it is unlawful to send any unsolicited advertisement to
such equipment, punishable by action to recover actual monetary
loss, or $500, whichever is greater, for EACH violation.

332. Message Ack

From: "Sam Pontier" <bmus@ix.netcom.com>
Date: Sun, 12 Jul 1998 15:18:40 -0700
To: <aprssig@tapr.org>
Message-ID: <01bdade3$05e11360$99a9bacd@sampont>
Rendered body type: text/plain

I actually have two questions:

1. On the Station screen I enter
     Latitude   36 10 91 N
     Longitude 115 14 77 W

    These values are changed to
     Latitude   36 11 17 N
     Longitude 115 15 17 W

    This shows my station in the WRONG position

2. More importantly:

    When anyone sends me a message, my station WILL NOT send the ack.
I receive the message , but no ack is sent. When I send a message, it turns green
in the messaage window, but those that I receive stay red

I am running :
   WinAprs V2.2.0 (Unregistered)
   Windows NT 4.0
   Kantronics KPC- 9612 Plus

I would like to register the software, but not untill these problems are resolved.

Thanks in advance for any help

Sam N6TGU

333. Mic-E / WAPRS 2.20 Display Problem

From: ki0bf@juno.com (Terry J Kealey)
Date: Sun, 12 Jul 1998 11:45:04 -0500
To: aprssig@tapr.org
Message-ID: <19980712.174654.3566.1.ki0bf@juno.com>
Rendered body type: text/plain

Can anyone tell me if they are getting good position updates using
WinAPRS V2.20 and the Mic Encoder? I have not had my Mic-E connected
since early this year and I am not get any position updates with version
2.20 or 2.1.1. I don't have an earlier version than these and last
version I recall working was version 2.0.

I do see my icon displayed prior to a GPS position fix, but it is shown
at 38 59' 06"N / 76 29' 06"W. Once I get a good fix, the data is
displayed on the lower line of the window as it is received, but does not
update the position icon or the History list.

I am using MIM version MIC-104b and also thought that maybe it had been
upgraded again.

So before get too far into reconfiguring and troubleshooting, I wanted to
see if any other users were seeing this problem.

Thanks,
Terry, ki0bf

_____
You don't need to buy Internet access to use free Internet e-mail.
Get completely free e-mail from Juno at http://www.juno.com
Or call Juno at (800) 654-JUNO [654-5866]

334. Re: Doppler systems doppler

From: Joe Foor <kf4dys@wfeca.net>
Date: Sun, 12 Jul 1998 17:58:45
To: kd4rdb@eagnet.com
Cc: aprssig@tapr.org
Message-ID: <3.0.5.16.19980712175845.34ffb494@pop.wfeca.net>
Rendered body type: text/plain

Wes wrote:
>It would be interesting to use KISS in the application of a
>multiplexed serial port, but unnecessary in our application. Data needs to
>come into the serial port from many sources - gps, wx station, tnc, doppler
>finder. But aside from configuration, you never need to talk to these
>devices. Since aprs can accept any data it sees onthe serial port, you
>need a device that can monitor several uarts, convert the baud rate if
>needed, and send the data recieved to the PC serial port. Data from the
>PC's serial port would always goto the TNC.

I replied with:
>Hunh??? This sounds like I could set my TNC to 2400 baud and use a
>simple transistor switch, fed from the TNC dcd line to control it.
>When there was no received data on the TNC, the data stream would be
>enabled from the WX station to the com port and when there was a
>received packet, the data stream would be cut off so the TNC data
>could go to the com port. A delay would be needed to ensure that the
>entire packet got from the TNC to the com port, but that wouldn't take
>much doing. It doesn't sound like a PIC would be necessary at all.
>
>This could finally lead to the "many times requested" HSP switch for a
>WX station.
>

I tested this and it doesn't work that way. When I connected the WX
station to the TNC designated com port, APRSdos failed to recognise
the WX data. APRS does not "accept any data it sees onthe serial
port".

I tried editing my configuration file, to designate com1 for both the
TNC and the WX station, but then I get an error 55 when APRSdos tries
to read the WX data.

This would have been an elegantly simple solution, but it doesn't
work.

Regards, Joe Foor   kf4dys@wfeca.net
http://www.wfeca.net/~kf4dys/books.html (got some books to trade?)

Global Warming: The natural process, by which the earth returns to it's
                normal climate, in the aftermath of an ice age.

335. WinAprs V2.2.0 and Windows NT 4.0

From: "Sam Pontier" <bmus@ix.netcom.com>
Date: Sun, 12 Jul 1998 16:30:46 -0700
To: <aprssig@tapr.org>
Message-ID: <01bdaded$184f8180$99a9bacd@sampont>
Rendered body type: text/plain

I actually have two questions:

1. On the Station screen I enter
     Latitude   36 10 91 N
     Longitude 115 14 77 W

    These values are changed to
     Latitude   36 11 17 N
     Longitude 115 15 17 W

    This shows my station in the WRONG position

2. More importantly:

    When anyone sends me a message, my station WILL NOT send the ack.
I receive the message , but no ack is sent. When I send a message, it turns
green
in the messaage window, but those that I receive stay red

I am running :
   WinAprs V2.2.0 (Unregistered)
   Windows NT 4.0
   Kantronics KPC- 9612 Plus

I would like to register the software, but not untill these problems are
resolved.

Thanks in advance for any help

Sam N6TGU

336. Re: [APRSSIG:26166] Re: Doppler systems doppler

From: Bob Merchant <KB8AST@mwweb.com>
Date: Sun, 12 Jul 1998 20:04:29 -0400
To: Wes Johnston <kd4rdb@eagnet.com>, aprssig@tapr.org
Message-ID: <3.0.5.32.19980712200429.007d7220@MAIL.mwweb.com>
Rendered body type: text/plain

At 09:15 AM 7/12/98 -0400, you wrote:
>The KISS protocol is pretty simple. What makes kiss look so intimidating
>in our case (packet radio) is that when you look at a KISS frame, you see
>the data as it is to be sent over the air - the callsigns are shifted one
>bit left, there are all sorts of flags in there, and then your data. It
>can address up to 16 ports within a device. Each packet of information
>headed to a KISS device begins and ends with the byte 192 (CO in hex). The
>second byte contains the port number, and the third byte contains the data.
> (I've left out some trivial details for simplification). So aside from
>the first 3 bytes and the last byte, a kiss frame contains exactly the data
>you wish passed along. Using such a scheme to address multiple serial
>ports off a "black box" would not require that the TNC be in kiss mode.
>The black box could recieve data from the PC in kiss format, strip away the
>kiss part, select a serial port, and pass the data to the correct serial
>port. It would be interesting to use KISS in the application of a
>multiplexed serial port, but unnecessary in our application. Data needs to
>come into the serial port from many sources - gps, wx station, tnc, doppler
>finder. But aside from configuration, you never need to talk to these
>devices. Since aprs can accept any data it sees onthe serial port, you
>need a device that can monitor several uarts, convert the baud rate if
>needed, and send the data recieved to the PC serial port. Data from the
>PC's serial port would always go to the TNC.
>
>
 Agreed, but to limit the "black box" by not allowing data flow to the
individual
legs would not permit optioning the individual UARTs for baud rate, parity,
& word
length, on the device side of the UART. You need to come up with two
different modes
of operation within the "black box". 1) APRS mode with everything as you
have it above,
and 2) Configuration mode where you can adjust and even add more UARTs to
the data
bridge. How about stacking two bridges...normal route into the tnc via the
radio's through the first tnc, out the computer port into the second
bridge's tnc port, and out it's computer port. If each bridge had 4
ports...Computer, TNC, port 3 (programmable) and port 4 (also
programmable)..you could run (1-1) computer, (1-2) inter bridge to (2-1),
(1-3) WX station, (1-4) Doppler, 2-2) TNC, (2-3) GPS (for time correction
and present location), and still have one more port (2-4) for your
lightning detector....or whatever. 8 UARTs, 6 useable ports...plus the
question arises as to how you program bridge 2...other than connect your
computer directly to the computer port on the bridge PCB.
 The other alternative would be to build an expandable bridge...4 ports
basic, expandable by the addition of 1 to 4 UARTs to a 5, 6, 7, or 8 way
device. That way you get one port per each UART.
 To simplify matters, you really need to be able to put the configuration
program in the black box device. That way you don't need anything more than
a dumb terminal to talk to the black box.
73, de Bob,
KB8AST@mwweb.com
KB8AST@KB8AST.#NEOH.OH.USA.NOAM
http://www.mwweb.com/kb8ast/kb8ast.htm
APRS approx. co-ord's: 4143.82N/08109.50W

337. beta tester needed

From: Wes Johnston <kd4rdb@eagnet.com>
Date: Sun, 12 Jul 1998 20:24:13 -0400
To: aprssig@tapr.org
Message-ID: <3.0.32.19980712202411.0070113c@gena>
Rendered body type: text/plain

I have completed work on an aprs compatible digipeater. It functions as a
WIDEn, TRACE, and has 5 aliases. It also provides a predetermined route
according to WIDEn where n >8.

Right now, the program acts as a digipeater. I need to test this to see
that it works before proceeding to the next step which is to prevent dupes
on the air, and compress position reports on the fly.

This program is not ready for prime time, and does not have a command
interface yet. it requires your TNC to already be in KISS mode, and set to
4800 bauds. If this is a problem, let me know, I'll make changes and send
you another version.
Wes
Email: mailto:kd4rdb@usa.net
APRS: http://www.qsl.net/kd4rdb/aprs.htm
A good traveler has no fixed plans and is not intent on arriving.

338. Mackinac Island Race

From: WB9WOZ@aol.com
Date: Sun, 12 Jul 1998 20:35:12 EDT
To: aprssig@tapr.org
Message-ID: <3a76a700.35a95641@aol.com>
Rendered body type: text/plain

Next weekend is the famous Chicago to Mackinac Island Sailboat race. This will be the 100th anniversary, with 299 boats competing.

My question is... Does anyone know if there will be any boats running APRS and sailing in the event. Sure would be cool if there was. Since the course is 333 miles, it will last for a couple of days.

Bruce
wb9woz@nian.org

339. Re: [APRSSIG:26168] Meteor scatter????

From: mmorg@juno.com (Myrle H Morgan)
Date: Sun, 12 Jul 1998 21:11:15 edt
To: aprssig@tapr.org
Message-ID: <19980712.211134.7319.0.MMORG@juno.com>
Rendered body type: text/plain

On June 29, 1998, I copied this packet direct.

NT4Y-7*>WIDE3-3>APRS:!292134z3105.66NT08654.69W#PHG7460
Wide/Relay/Trace/BARU Brewton, AL

It was a TRACE digi in Alabama, a 1185 mile hop. That's the first long haul
packet that I've seen.

Best Regards, Myrle - K1HJC -
==========
Myrle H. Morgan / 572 Chester Turnpike / PO Box 32 / Candia, NH 03034-0032
Phone: (603) 483-5117 E-mail: mmorg@juno.com
==========

_____
You don't need to buy Internet access to use free Internet e-mail.
Get completely free e-mail from Juno at http://www.juno.com
Or call Juno at (800) 654-JUNO [654-5866]

340. Re: [APRSSIG:26177] Mic-E / WAPRS 2.20 Display Problem

From: Bob Bruninga <bruninga@nadn.navy.mil>
Date: Sun, 12 Jul 1998 21:35:19 -0400 (EDT)
To: Terry J Kealey <ki0bf@juno.com>
Cc: aprssig@tapr.org
Message-ID: <Pine.SOL.3.96.980712213334.16825Q-100000@arctic>
Rendered body type: text/plain

You have a beta verssion MIM. Only APRSdos supports both the BETA and the production unit. I suggest you get a new MIM chip. The main problem with the BETA chips are that their on-air format will not go through the internet, so no one will every see you via the vast APRServe system with that older chip.

On Sun, 12 Jul 1998, Terry J Kealey wrote:

> Can anyone tell me if they are getting good position updates using
> WinAPRS V2.20 and the Mic Encoder? I have not had my Mic-E connected
> since early this year and I am not get any position updates with version
> 2.20 or 2.1.1. I don't have an earlier version than these and last
> version I recall working was version 2.0.
>
> I do see my icon displayed prior to a GPS position fix, but it is shown
> at 38 59' 06"N / 76 29' 06"W. Once I get a good fix, the data is
> displayed on the lower line of the window as it is received, but does not
> update the position icon or the History list.
>
> I am using MIM version MIC-104b and also thought that maybe it had been
> upgraded again.
>
> So before get too far into reconfiguring and troubleshooting, I wanted to
> see if any other users were seeing this problem.

>
> Thanks,
> Terry, ki0bf
>
> ____
> You don't need to buy Internet access to use free Internet e-mail.
> Get completely free e-mail from Juno at http://www.juno.com
> Or call Juno at (800) 654-JUNO [654-5866]
>
>

APRSdos REPLY/COMMENT:

Reply mail addr: wb4apr@amsat.org
US mail address: 115 old Farm Ct, Glen Burnie, MD 21060
See DAYTON97 HISTORY: http://web.usna.navy.mil/~bruninga/dayton.html
See Maryland APRS LIVE: http://web.usna.navy.mil/~bruninga/aprs.html
See GPS on ANY radio: http://www.tapr.org/tapr/html/mic-e.html

341. Re: [APRSSIG:26183] Re: Meteor scatter????

From: Bob Bruninga <bruninga@nadn.navy.mil>
Date: Sun, 12 Jul 1998 21:40:45 -0400 (EDT)
To: Myrle H Morgan <mmorg@juno.com>
Cc: aprssig@tapr.org
Message-ID: <Pine.SOL.3.96.980712214026.16825S-100000@arctic>
Rendered body type: text/plain

Shucks! I just relized 12 July is the Persieds!

On Sun, 12 Jul 1998, Myrle H Morgan wrote:

> On June 29, 1998, I copied this packet direct.
>
> NT4Y-7*>WIDE3-3>APRS:!292134z3105.66NT08654.69W#PHG7460
> Wide/Relay/Trace/BARU Brewton, AL
>
> It was a TRACE digi in Alabama, a 1185 mile hop. That's the first long
> haul
> packet that I've seen.
>
>
> Best Regards, Myrle - K1HJC -
> ==
> Myrle H. Morgan / 572 Chester Turnpike / PO Box 32 / Candia, NH
> 03034-0032
> Phone: (603) 483-5117   E-mail: mmorg@juno.com
> ==
>
> ____
> You don't need to buy Internet access to use free Internet e-mail.
> Get completely free e-mail from Juno at http://www.juno.com
> Or call Juno at (800) 654-JUNO [654-5866]
>
>

APRSdos REPLY/COMMENT:

Reply mail addr: wb4apr@amsat.org
US mail address: 115 old Farm Ct, Glen Burnie, MD 21060
See DAYTON97 HISTORY: http://web.usna.navy.mil/~bruninga/dayton.html
See Maryland APRS LIVE: http://web.usna.navy.mil/~bruninga/aprs.html
See GPS on ANY radio: http://www.tapr.org/tapr/html/mic-e.html

342. Jacksonville, FL Hamfest (Aug 1-2) APRS Forum

From: BordingK@aol.com
Date: Sun, 12 Jul 1998 21:40:37 EDT
To: aprssig@tapr.org
Message-ID: <eec9c354.35a96599@aol.com>
Rendered body type: text/plain

Calling all Southeastern APRS types:

Greater Jacksonville, FL Hamfest is 1-2 August and we will be putting on an
APRS forum at 1400 hrs on Saturday 1 August in the Prime Osborne Convention
Center.

This is our forum and we can tailor to our interests. It will provide an
excellent opportunity to exchange ideas and operating procedures.

Looking for volunteers to demonstrate the various new features such as NWS
warnings, etc.

Contact me via direct Email at bordingk@aol.com.

de W5KNB
Ken

343. last note

From: kd4emi@juno.com (Michael A Kantor)
Date: Sun, 12 Jul 1998 16:47:16 -0400
To: aprssig@tapr.org
Message-ID: <19980712.215849.3318.1.kd4emi@juno.com>
Rendered body type: text/plain

As of today I have recieved 40 (yes 40) msgs in 2 days about the
lightning detector

With the help of some other hams, I am going to set up a web page..

(they are going to set up a web page) with the info that I give them...

Look for it this week...

Wow...what a response..!

Mike
KD4EMI@JUNO.COm

_____
You don't need to buy Internet access to use free Internet e-mail.
Get completely free e-mail from Juno at http://www.juno.com
Or call Juno at (800) 654-JUNO [654-5866]

344. lights

From: kd4emi@juno.com (Michael A Kantor)
Date: Sun, 12 Jul 1998 22:02:50 -0400
To: aprssig@tapr.org, bruninga@nadn.navy.mil
Message-ID: <19980712.220250.3318.2.kd4emi@juno.com>
Rendered body type: text/plain

The lights indicate the distance from the lightning...

When the lightning is <20 miles you set off the beacon...

Mike
KD4EMI@JUNO.COM

_____
You don't need to buy Internet access to use free Internet e-mail.
Get completely free e-mail from Juno at http://www.juno.com
Or call Juno at (800) 654-JUNO [654-5866]

345. Re: [APRSSIG:26183] Re: Meteor scatter????

From: "Dennis Todd" <dennytodd@email.msn.com>
Date: Sun, 12 Jul 1998 19:06:32 -0700
To: <mmorg@juno.com>, <aprssig@tapr.org>
Message-ID: <002f01bdae02$de03cac0$313561ce@default>
Rendered body type: text/plain

>On June 29, 1998, I copied this packet direct.
>
>NT4Y-7*>WIDE3-3>APRS:!292134z3105.66NT08654.69W#PHG7460
>Wide/Relay/Trace/BARU Brewton, AL

Although there are no stations on 144.39 within 400 miles I have a station
running WINAPRS 2.2.0 monitoring this freq.
On June 13, 1998 I copped one packet form NOALJ in Rogers AK. around 6:30
AM. Also 1,100 plus miles east of me.
Denny Todd
KC7RVK

346. Re: lights

From: Bob Bruninga <bruninga@nadn.navy.mil>
Date: Sun, 12 Jul 1998 22:50:07 -0400 (EDT)

To: Michael A Kantor <kd4emi@juno.com>
Cc: aprssig@tapr.org
Message-ID: <Pine.SOL.3.96.980712224900.20352A-100000@arctic>
Rendered body type: text/plain

On Sun, 12 Jul 1998, Michael A Kantor wrote:

> The lights indicate the distance from the lightning...
So, one light is 20 miles. What are the other two? Do you want APRS to
draw a N radius circle around your station when the buzzer goes off?

>
> When the lightning is <20 miles you set off the beacon...
>
> Mike
> KD4EMI@JUNO.COM
>
> ____
> You don't need to buy Internet access to use free Internet e-mail.
> Get completely free e-mail from Juno at http://www.juno.com
> Or call Juno at (800) 654-JUNO [654-5866]
>

APRSdos REPLY/COMMENT:

Reply mail addr: wb4apr@amsat.org
US mail address: 115 old Farm Ct, Glen Burnie, MD 21060
See DAYTON97 HISTORY: http://web.usna.navy.mil/~bruninga/dayton.html
See Maryland APRS LIVE: http://web.usna.navy.mil/~bruninga/aprs.html
See GPS on ANY radio: http://www.tapr.org/tapr/html/mic-e.html

347. Re: [APRSSIG:26185] Re: Meteor scatter????

From: Bob Bruninga <bruninga@nadn.navy.mil>
Date: Sun, 12 Jul 1998 22:51:33 -0400 (EDT)
To: Brent Hildebrand <bhildebrand@earthlink.net>
Cc: aprssig@tapr.org
Message-ID: <Pine.SOL.3.96.980712225021.20352B-100000@arctic>
Rendered body type: text/plain

OOPs. shulda checked my facts! Silly me...

Bob

On Sun, 12 Jul 1998, Brent Hildebrand wrote:

>Bob said: >Shucks! I just relized 12 July is the Persieds!

>Brent said: Persied is usually in August. BH

348. Re: Meteor scatter????

From: "pmarkham" <pmarkham@newsguy.com>
Date: Sun, 12 Jul 1998 22:54:32 -0400
To: aprssig@tapr.org
Message-ID: <199807130254.TAA27826@newsguy.com>
Rendered body type: text/plain

> Shucks! I just relized 12 July is the Persieds!

  AAAAHH! Nope.

   Shoot for 12 August 0000 UTC thru 13 August 2400 UTC

    With the internet joining many local vhf networks, it might be
easier to find the occasional ms packet. I will be hosing the rocks.

    I have finally dumped my local POP mail server, after missing
most of my mail over the past few weeks. Hope my silence hasn't
offended anyone ;-)

                                    Pete/wa4hei

  The meek will not inherit the Earth.

349. Re: [APRSSIG:26185] Re: Meteor scatter????

From: "Ronald G. Parsons" <w5rkn@amsat.org>
Date: Sun, 12 Jul 1998 21:54:31 -0500
To: bruninga@nadn.navy.mil, APRS-SIG <aprssig@tapr.org>

Message-ID: <35A976E7.9BFDFEA3@amsat.org>
Rendered body type: text/plain

You are a month early.
http://www1.tmisnet.com/~abdale/Astronomy/Meteors.html

Ron

Bob Bruninga wrote:
>
> Shucks! I just relized 12 July is the Persieds!
>

--
Ron Parsons
W5RKN

350. Re: [APRSSIG:26191] Re: Meteor scatter????

From: Bill Vodall <wa7nwp@bigsky.com>
Date: Sun, 12 Jul 1998 20:43:01 -0700 (PDT)
To: bruninga@nadn.navy.mil
Cc: aprssig@tapr.org
Message-ID: <199807130343.UAA22533@eagle.bigsky.com>
Rendered body type: text/plain

>
> >Brent said: Persied is usually in August. BH

Will the new compressed format be ready for prime time by then?
It would be interesting to see how this years results with it
compares to the previous years longer packets.

Bill - WA7NWP

351. Re: [APRSSIG:26180] Re: Doppler systems doppler

From: "David VanHorn" <dvanhorn@cedar.net>
Date: Sun, 12 Jul 1998 22:50:14 -0500
To: <KB8AST@mwweb.com>, <aprssig@tapr.org>
Message-ID: <017601bdae11$992110c0$88f135ce@xenu>
Rendered body type: text/plain

>>
> Agreed, but to limit the "black box" by not allowing data flow to the
>individual
>legs would not permit optioning the individual UARTs for baud rate, parity,
>& word
>length, on the device side of the UART.

Umm.. Not quite like that The Uarts aren't programmed directly by the data
stream.
I'd have to recognize the command in mid stream and send a config bit
pattern to
the uart. It's a trivial problem, AKA no problem.

>You need to come up with two different modes
>of operation within the "black box". 1) APRS mode with everything as you
>have it above, and 2) Configuration mode where you can adjust and even add
more UARTs to
>the data bridge.

Maybe.. I was thinking about sending commands as data to port zero. That's
easy, and makes
it orthagonal to APRS as well. The bridge then just appears as another
device on another com port.
I wonder if there's a limit on com ports in wintel?

 How about stacking two bridges...normal route into the tnc via the
>radio's through the first tnc, out the computer port into the second
>bridge's tnc port, and out it's computer port. If each bridge had 4
>ports...Computer, TNC, port 3 (programmable) and port 4 (also
>programmable)..you could run (1-1) computer, (1-2) inter bridge to (2-1),
>(1-3) WX station, (1-4) Doppler, 2-2) TNC, (2-3) GPS (for time correction
>and present location), and still have one more port (2-4) for your
>lightning detector....or whatever. 8 UARTs, 6 useable ports...plus the
>question arises as to how you program bridge 2...other than connect your
>computer directly to the computer port on the bridge PCB.

You lost me completely here.

> The other alternative would be to build an expandable bridge...4 ports
>basic, expandable by the addition of 1 to 4 UARTs to a 5, 6, 7, or 8 way
>device. That way you get one port per each UART.

That's what I'm working on. One uart per port, plus a "master" that communicates
with the APRS PC.

> To simplify matters, you really need to be able to put the configuration
>program in the black box device. That way you don't need anything more than
>a dumb terminal to talk to the black box.

Could do.. I've got rom space and NVRAM space to store configs, but I'd like APRS
to take it from the normal settings you make already.

352. Re: [APRSSIG:26191] Re: Meteor scatter????

From: Bob Bruninga <bruninga@nadn.navy.mil>
Date: Sun, 12 Jul 1998 23:58:42 -0400 (EDT)
To: Bill Vodall <wa7nwp@bigsky.com>
Cc: aprssig@tapr.org
Message-ID: <Pine.SOL.3.96.980712235632.20352G-100000@arctic>
Rendered body type: text/plain

On Sun, 12 Jul 1998, Bill Vodall wrote about the Persieds in AUG:

> Will the new compressed format be ready for prime time by then?
> It would be interesting to see how this years results with it
> compares to the previous years longer packets.

For MScatter, you cannot beat the existing GRID-IN-TO format for a short packet:

   KU0G>FM19DX:]-[...

WB4APR

353. APRS on-air format spec?

From: "Paul Christenson" <n3eop@hotmail.com>
Date: Sun, 12 Jul 1998 21:41:07 PDT
To: aprssig@tapr.org
Message-ID: <19980713044108.6496.qmail@hotmail.com>
Rendered body type: text/plain

Is there an authoritative spec for the APRS packet anywhere? I have a few projects bouncing around my brain, and want to make sure that it sends out "legal" packets.

_____
Get Your Private, Free Email at http://www.hotmail.com

354. Porta-Digi comleted

From: William Nolle <wa8inz@airnet.net>
Date: Mon, 13 Jul 1998 00:53:05 -0500
To: aprssig@tapr.org
Message-ID: <35A9A0C1.F9E21141@airnet.net>
Rendered body type: text/plain

Again for those that have shown an interest in the building of my paorta-digi
it is now completed. The picture of the completed digi including the camouflage
cover can be seen on my website. I will be removing the webpage after a week
or so. Thank you to those that have written me about it.

http://www.airnet.net/wa8inz

Bill wa8inz

355. Garmin GPS30PC

From: Norm Rashleigh <VE3LC@hydra.carleton.ca>
Date: Mon, 13 Jul 1998 06:47:40 -0400
To: aprssig@tapr.org
Message-ID: <1.5.4.32.19980713104740.008fafd0@hydra.carleton.ca>
Rendered body type: text/plain

I was one of the delighted souls to receive the tapr offer of the Garmin
GPS30PC gps units. Shortly after I got it in the mail, I tested it using a
PC terminal program and it seemed to work just fine after the many minutes
required to obtain a "fix".

Well after many months of leaving it on the shelf awaiting some time to play
with it , I just got to it again.

Well it doesn't work fine any more. I did get a fix, but after a few
minutes, lost it. Another attempt. It again got acquistion and then lost
it. Now, it just doesn't seem to "fix" at all any more, even with the
antenna with a good clear view of the sky (mag mounted on top of the car).
The data output works fine spewing forth to the pc, just no position or
other derived GPS data in the nema sentences. Has the rx gone dead or am I
doing something wrong..

Any ideas?

Norm Rashleigh | Internet: VE3LC@hydra.carleton.ca
Ottawa , Ont. | Amprnet: VE3LC@VE3LC.ampr.org
613-837-1733 | Home Page: amprnet http://ve3lc.ampr.org/ve3lc.htm

356. Re: [APRSSIG:26198] Porta-Digi comleted

From: Wes Johnston <kd4rdb@eagnet.com>
Date: Mon, 13 Jul 1998 07:36:37 -0400
To: wa8inz@airnet.net, aprssig@tapr.org
Message-ID: <3.0.32.19980713073635.006c9d28@gena>
Rendered body type: text/plain

This has a DEFINITE coolness factor! Very nicely done Bill! I've been
thinking of RF free sites to place digis'... and have come up with signs
along the interstate, forestry towers, and church steeples. This would
work in any of the above situations!!!

>http://www.airnet.net/wa8inz
>
>Bill wa8inz
>
>
Wes
Email: mailto:kd4rdb@usa.net
APRS: http://www.qsl.net/kd4rdb/aprs.htm
A good traveler has no fixed plans and is not intent on arriving.

357. Doppler Systems doppler

From: "John Munsey, KB3GK" <munseyj@worldnet.att.net>
Date: Mon, 13 Jul 1998 08:06:51 -0400
To: aprssig@tapr.org
Message-ID: <3.0.32.19980713080622.00694c3c@postoffice.worldnet.att.net>
Rendered body type: text/plain

Recently there have been a number of ideas for interfacing this doppler
with APRS 2.2.0. However, no one has said that they have made it work.
Has anyone accomplished this task?

Thanks,

John Munsey, KB3GK
Ormond Beach, Fl.
munseyj@worldnet.att.net

358. Re: [APRSSIG:26201] Doppler Systems doppler

From: Keith Sproul <ksproul@rci.rutgers.edu>
Date: Mon, 13 Jul 1998 09:03:51 -0400
To: munseyj@worldnet.att.net
Cc: aprssig@tapr.org
Message-ID: <v04003a01b1cfb6186af2@[128.6.18.58]>
Rendered body type: text/plain

>Recently there have been a number of ideas for interfacing this doppler
>with APRS 2.2.0. However, no one has said that they have made it work.
>Has anyone accomplished this task?

>
>Thanks,
>
>
>
>John Munsey, KB3GK
>Ormond Beach, Fl.
>munseyj@worldnet.att.net

This will be in the next release of WinAPRS... I have the full specs, and
some sample data.. I have it mostly done already..

Keith Sproul

Keith Sproul   ksproul@rci.rutgers.edu   WU2Z
Student Housing Network Coordinator   732 445-3695 W
Rutgers University Computing Services   732 821-4828 H

359. APRS via MIR (schools)

From: Bob Bruninga <bruninga@nadn.navy.mil>
Date: Mon, 13 Jul 1998 09:43:18 -0400 (EDT)
To: aprssig@tapr.org
Message-ID: <Pine.SOL.3.96.980713092701.15476A-100000@arctic>
Rendered body type: text/plain

The MIREX team is encouraging APRS via MIR on 145.985 on any pass as long
as there is some school or student involvement. Mir is currently coming
over the USA between about midnight and 10 AM but getting earlier by about
20 minutes every day.

Although you might not have students at the station during these times
during the summer, still, you should put your school station on the air.

Each day, you can see if you got in by checking my WEB page at:

   http://web.usna.navy.mil/~bruninga/mirex.html

Choose a reporting rate that gets you no more than one success per pass.
Don't hog it or over do it, others are also trying to use the packet
channel.

WB4APR

360. Re: [APRSSIG:26198] Porta-Digi comleted

From: "O.C. Winton wn1z" <wn1z@sojourner.wn1z.ampr.org>
Date: Mon, 13 Jul 1998 06:48:00 -0700
To: aprssig@tapr.org
Message-ID: <6438@babylon.wn1z.ampr.org>
Rendered body type: text/plain

After going to this web site, the main page loaded OK but
all the subsidiary pages would stop when the images were
about half loaded. So i got half pictures. Anyone else
experience this or is it just me.

Orrin wn1z
Monterey CA

At 12:56 AM 7/13/98 -0500, William Nolle wrote:
>Again for those that have shown an interest in the building of my
>paorta-digi
>it is now completed. The picture of the completed digi including the
>camouflage
>cover can be seen on my website. I will be removing the webpage after a
>week
>or so. Thank you to those that have written me about it.
>
>http://www.airnet.net/wa8inz
>
>Bill wa8inz
>

361. Re: [APRSSIG:26152] Re: Doppler systems doppler

From: ckrin.nospam@Iamerica.net (Charles S. Krin, DO FAAFP)
Date: Mon, 13 Jul 1998 14:17:43 GMT

To: dvanhorn@cedar.net
Cc: aprssig@tapr.org
Message-ID: <35ab16ac.4331462@mailhost.iamerica.net>
Rendered body type: text/plain

On Fri, 10 Jul 1998 21:04:19 -0500 (CDT), you wrote:

>
>Perhaps he is still on the SIG and he will update us all
>>as to how things are progressing....
>
>
>Still here. I haven't done much with it yet, but the pieces are all
>available now.
>The only part I can't do, is the APRS side. APRS would have to know my box
>is on the serial port, and it would have to send and receive data with some
>kind of addressed packet protocol.
>
>There's really nothing standing in the way, and I have written the multiport
>buffer
>code that is central to this working properly.
>
>My questions are, is there enough interest to justify writing the code, and
>will the
>APRS authours support it?
Don't know about the APRS authors, but if you have a SSC server
available, and will give me a cost estimate, would like to reserve 2
units for starters.

ck

--
Charles S. Krin, DO FAAFP
Member, PGBFH
KC5EVN
Email address dump file for spam
reply to ckrin at Iamerica dot net
F*S=k (Freedom times Security equals a constant: the more
security you have, the less freedom!)(Stolen from
Alt.Fan.Heinlein)

362. Stealth/Portable APRS digi

From: Bob Bruninga <bruninga@nadn.navy.mil>
Date: Mon, 13 Jul 1998 10:28:19 -0400 (EDT)
To: aprssig@tapr.org
Message-ID: <Pine.SOL.3.96.980713102457.24172G-100000@arctic>
Rendered body type: text/plain

I checked out Bill's WEB page (airnet.net/WA8INZ) and his portable digi
is fantastic! Great work and Great photos. I hope he is going to submit
this to QST or some other suitable HAM magazine.

This is something that everyone should see. Every HAM club should have
one of these to be able to respond to emergencies or special events!

de WB4APR, Bob

P.S.
My only comment for true quick-response emergency operations, would be to
include a provision for powering from 6 to 9 standard D cell alkaline
batteries. This way you dont have to worry about charging it the night
before and you get 14 AMP HOURS of life... My guess is that the D cells
would power it for about 4 days of normal WIDE use.

But your 4 AH gel-cell design is PERFECT for the one or 2 day special
event when you can charge them the night before!

363. Re: [APRSSIG:26179] WinAprs V2.2.0 and Windows NT 4.0

From: Mark Sproul <msproul@ap.org>
Date: Mon, 13 Jul 1998 10:34:48 -0400
To: bmus@ix.netcom.com, aprssig@tapr.org
Message-ID: <v03110705b1cfcafca03d@[165.1.27.20]>
Rendered body type: text/plain

At 7:34 PM -0400 7/12/98, Sam Pontier wrote:
>I actually have two questions:
>
>1. On the Station screen I enter

>   Latitude   36 10 91 N
>   Longitude 115 14 77 W
>
>   These values are changed to
>   Latitude   36 11 17 N
>   Longitude 115 15 17 W
>
>   This shows my station in the WRONG position
>

        WInAPRS wants Degress Minutes Seconds, not 100's of minutes
        so this should be
>   Latitude   36 10 54 N
>   Longitude 115 14 46 W

        We may be chaning this to get rid of the confusion

>
>2. More importantly:
>
>   When anyone sends me a message, my station WILL NOT send the ack.
>I receive the message , but no ack is sent. When I send a message, it turns
>green
>in the messaage window, but those that I receive stay red
>

        I will look into this, I know acking should be working

Mark

_____
(please note email address change msproul@ap.org)
_____
Mark Sproul |Amateur Radio: KB2ICI
Software Engineer @ Assoc Press |
msproul@ap.org |Work: 609-860-7120
North Brunswick, NJ |Fax: 609-860-7129
http://msproul.rutgers.edu/
_____

364. Bluetooth 2.45GHz wireless data

From: David Bolduc <dbolduc@richland.cc.il.us>
Date: Mon, 13 Jul 1998 09:58:49 -0500
To: aprssig@tapr.org
Message-ID: <3.0.3.32.19980713095849.006b1074@richland.cc.il.us>
Rendered body type: text/plain

I saw short paragragh in the July 1998 PC Magazine concerning an upcoming
wireless system for laptops, cellphones etc that uses 2.45 GHz for the
interconnect which is capable of passing data at 1 Mbps within 10 meters or
100 meters with an amplifier. Look at Pipeline on page 9. They say it
will be inexpensive! Want to read more go to do a search for   bluetooth
wireless
There's a lot of stuff out there and the transmitters may be had for as
little as $20.00

73's

Dave,
KB9FBG

365. Re: [APRSSIG:26204] Re: Porta-Digi comleted

From: Bruce Douberley <bcdpe@CLEMSON.EDU>
Date: Mon, 13 Jul 1998 11:32:46 -0400
To: aprssig@tapr.org
Message-ID: <v04011701b1cfd8d08a9c@[130.127.29.28]>
Rendered body type: text/plain

No problems on my end
Bruce

>After going to this web site, the main page loaded OK but
>all the subsidiary pages would stop when the images were

>about half loaded. So i got half pictures. Anyone else
>experience this or is it just me.
>
>Orrin wn1z
>Monterey CA
>

>>
>>http://www.airnet.net/wa8inz
>>
>>Bill wa8inz
>>

Bruce Douberley, TSP
272 Sirrine Hall
(864) 656-5972

366. Troubleshooting U2k

From: Arte Booten <n2zrc@webspan.net>
Date: Mon, 13 Jul 1998 11:43:35 -0400
To: APRS SIG <aprssig@tapr.org>
Message-ID: <35AA2B27.68E40F1E@webspan.net>
Rendered body type: text/plain

Hi all,

     I have an "early" Peet Bro's U-2000, outdoor temp/humidity sensor,
heated anemometer and their "Pro" rain gauge (the one that's shaped like
a brandy snifter without the base). I get no windspeed or direction, no
(or wildly inaccurate) humidity, and the rain gauge only registers the
first 1/100th of an inch of rain per rain event.

     I called Peet Bro's some months ago, suspecting the control box,
and they suggested some test procedures, but I didn't have a pen or pa-
per handy at the time. Anybody have any ideas on how to figure out what
is wrong.

     BTW, I'm no electronics whiz, so please keep any explanations sim-
ple enough for me. 73
--
Arte Booten <n2zrc@webspan.net> EC/RO for Bronx County, NYC ARES/RACES
PGP Key Fingerprint: 22E5 3EC7 4E3C 2460 C570 BACA E48B 71D5 0F33 54AD
Riverdale, NY [FN30bu]   Cruise Missile Coordinates: 4052.71N/07354.06W
    TM-V7a/KPC-3 6.0/GPS-III Packet: N2ZRC@KB2VLX.#BRONX.NY.USA.NA

   "There is an undetonated Chroniton Torpedo lodged in the hull."
   "Do not attempt to disarm it until I arrive." "Arrive quickly!"
      -Seven of Nine & Tuvok, Star Trek: Voyager; "Year of Hell"

367. Re: APRS via MIR

From: Arte Booten <n2zrc@webspan.net>
Date: Mon, 13 Jul 1998 11:46:52 -0400
To: APRS SIG <aprssig@tapr.org>
Message-ID: <35AA2BEB.FB9D3262@webspan.net>
Rendered body type: text/plain

Hi all,

Bob B. wrote:

>... Mir is currently coming over the USA between about midnight and 10
>AM but getting earlier by about 20 minutes every day.

     Does anyone know where I can find (without subscribing to a list)
a listing of Two-Line-Elements? My sat tracking software of choice is
STS Plus, which prefers these over regular Keplerian elements. 73
--
Arte Booten <n2zrc@webspan.net> EC/RO for Bronx County, NYC ARES/RACES
PGP Key Fingerprint: 22E5 3EC7 4E3C 2460 C570 BACA E48B 71D5 0F33 54AD
Riverdale, NY [FN30bu]   Cruise Missile Coordinates: 4052.71N/07354.06W
    TM-V7a/KPC-3 6.0/GPS-III Packet: N2ZRC@KB2VLX.#BRONX.NY.USA.NA

   "There is an undetonated Chroniton Torpedo lodged in the hull."
   "Do not attempt to disarm it until I arrive." "Arrive quickly!"
      -Seven of Nine & Tuvok, Star Trek: Voyager; "Year of Hell"

368. Re: [APRSSIG:26173] APRS Messages

From: Jon Ogden <jono@enteract.com>
Date: Mon, 13 Jul 98 11:09:13 -0500
To: <JDWalkerJr@aol.com>, <aprssig@tapr.org>
Message-ID: <199807131607.LAA26453@tapr.org>
Rendered body type: text/plain

>I'm thinking it has something to do with TNC settings but my manual doesn't
>give much hope for a solution. I wonder if anyone is using my setup and
>might
>share TNC settings with me or suggest some other solution to the problem.
>
>I'm using APRSW with Windows 95. I have an old AEA PK-232 TNC upgraded with
>firmware to about 1991.

Try setting SCREENLN to 0 instead of 80 or whatever it is. This is the
register inside the TNC that controls how much of each line is displayed.
 Setting it to 0 allows pretty much unlimited length. SCREENLN is the
command in Kantronics TNCs, it may vary with the PK TNCs.

73,

Jon
KE9NA

Jon Ogden

jono@enteract.com
www.qsl.net/ke9na

"A life lived in fear is a life half lived."

369. Re: [APRSSIG:26199] Garmin GPS30PC

From: "Ken Mirabella" <kjm@flo-bin.com>
Date: Mon, 13 Jul 1998 09:21:59 -0700
To: <VE3LC@hydra.carleton.ca>, <aprssig@tapr.org>
Message-ID: <004901bdae7a$71ead360$0bbfabc7@local.host>
Rendered body type: text/plain

Consider yourself lucky. I've had a friends at my house for 4 months and I
can't get a beep out of it as yet.

Has anyone else had problems with this unit?

73, Ken, KM6YH

-----Original Message-----
From: Norm Rashleigh <VE3LC@hydra.carleton.ca>
To: aprssig@tapr.org <aprssig@tapr.org>
Date: Monday, July 13, 1998 4:15 AM
Subject: [APRSSIG:26199] Garmin GPS30PC

>I was one of the delighted souls to receive the tapr offer of the Garmin
>GPS30PC gps units.   Shortly after I got it in the mail, I tested it using
a
>PC terminal program and it seemed to work just fine after the many minutes
>required to obtain a "fix".
>
>Well after many months of leaving it on the shelf awaiting some time to
play
>with it , I just got to it again.
>
>Well it doesn't work fine any more. I did get a fix, but after a few
>minutes, lost it. Another attempt. It again got acquistion and then lost
>it. Now, it just doesn't seem to "fix" at all any more, even with the
>antenna with a good clear view of the sky (mag mounted on top of the car).
>The data output works fine spewing forth to the pc, just no position or
>other derived GPS data in the nema sentences. Has the rx gone dead or am I
>doing something wrong..
>
>Any ideas?
>
>
>
>
>

>Norm Rashleigh | Internet: VE3LC@hydra.carleton.ca
>Ottawa , Ont. | Amprnet: VE3LC@VE3LC.ampr.org
>613-837-1733 | Home Page: amprnet
http://ve3lc.ampr.org/ve3lc.htm
>
>
>

370. Re: [APRSSIG:26206] Stealth/Portable APRS digi

From: Ray Vaughan <rvaughan@gate.net>
Date: Mon, 13 Jul 1998 12:29:21 -0400
To: bruninga@nadn.navy.mil
Cc: aprssig@tapr.org
Message-ID: <1.5.4.32.19980713162921.00949e50@pop.gate.net>
Rendered body type: text/plain

At 09:31 AM 7/13/98 -0500, you wrote:
>
>I checked out Bill's WEB page (airnet.net/WA8INZ) and his portable digi
>is fantastic! Great work and Great photos. I hope he is going to submit
>this to QST or some other suitable HAM magazine.

Agreed... quite a project. And so well documented that it should be easy to copy. I think I read that the web site would be only available for a limited time. If it can't be housed at TAPR or one of the other APRS sites, I'll offer some of my personal web space. This thing is too damn good to let disappear.

But QST? If it was a CW keyer, they might have some interest. I would suggest submitting it to 73 before QST. QST: CW contesting=high tech.

I'm already thinking of the same form factor concept for a simplex voice repeater.

A note to everyone: If you do ANY project, take a few pics of it, and document what you did.

1. It will provide excellent documentation for your own repairs and mofications later.
2. It gives you a chance to show off.
3. Makes you a teacher without ever having to face a student.
4. Might give someone else an idea for another project.
5. Might help prevent someone claiming the same idea later in a patent (prior published art).
6. Will save you time when you need to explain it to someone else. Just give them your URL.
7. You'll get some great feedback on how to improve the design.
8. It's fun!
9. Saves trees. Electrons are recycled.

Internet is not the enemy of ham radio... It's one of many tools we can use to further the art.

I've watched the NHRC controllers designed, developed and supported via a web page. It's really a great way to do it. I've got a page for my digi (http://www.gate.net/~rvaughan/kd4bbm-6.htm) and have directed a few new digi owners to it. It only takes a few minutes when you use FrontPage 98. No HTML training needed.

Ray, KD4BBM

371. Re: [APRSSIG:26182] Mackinac Island Race

From: Jon Ogden <jono@enteract.com>
Date: Mon, 13 Jul 98 11:34:22 -0500
To: <WB9WOZ@aol.com>, <aprssig@tapr.org>
Message-ID: <199807131632.LAA28215@tapr.org>
Rendered body type: text/plain

>Next weekend is the famous Chicago to Mackinac Island Sailboat race. This
>will be the 100th anniversary, with 299 boats competing.
>
>My question is... Does anyone know if there will be any boats running APRS
>and sailing in the event. Sure would be cool if there was. Since the course
>is 333 miles, it will last for a couple of days.

No, not that I know of. I have participated in the race the last two years. This year I will not be. If I would have gone, one of my goals would have been to have APRS on board the boat.

APRS would be totally COOL on this race. What a great thing to have a
whole slew of boats outfitted. What a great thing for safety, Coast
Guard Tracking, etc.

Hopefully, next year I'll be racing in the race again. If I manage to
get permission to bring the APRS gear on board, I plan on writing a
letter the Chicago Yacht Club telling them what I am going to do and the
benefits it brings.

I have mentioned APRS to the Commodore of my yacht club and he thought it
was quite interesting. It would be really cool to show it off.

The only other problem is the lack of digipeaters much farther north than
Grand Rapids or so. There is a LOT of the state of Michigan that is not
covered. If we had digis farther north in Wisconsin than Milwaukee and
farther north than they are in Michigan, it would make a big difference.

Sorry to disappoint everyone this year, maybe next year. I would like to
maybe have APRS on some local races this year, but since I am crewing on
a new boat for me, I don't want to push it. I have to prove my sailing
ability first!

73,

Jon
KE9NA

Jon Ogden

jono@enteract.com
www.qsl.net/ke9na

"A life lived in fear is a life half lived."

372. Re: [APRSSIG:26204] Re: Porta-Digi comleted

From: Doug Woodruff <w4law@mindspring.com>
Date: Mon, 13 Jul 1998 12:38:33 -0400
To: wn1z@sojourner.wn1z.ampr.org
Cc: aprssig@tapr.org
Message-ID: <35AA3809.1144AACD@mindspring.com>
Rendered body type: text/plain

No problems here,

Doug, W4LAW

O.C. Winton wn1z wrote:

> After going to this web site, the main page loaded OK but
> all the subsidiary pages would stop when the images were
> about half loaded. So i got half pictures. Anyone else
> experience this or is it just me.
>
> Orrin wn1z
> Monterey CA
>
> At 12:56 AM 7/13/98 -0500, William Nolle wrote:
> >Again for those that have shown an interest in the building of my
> >paorta-digi
> >it is now completed. The picture of the completed digi including the
> >camouflage
> >cover can be seen on my website. I will be removing the webpage after a
> >week
> >or so. Thank you to those that have written me about it.
> >
> >http://www.airnet.net/wa8inz
> >
> >Bill wa8inz
> >

--
Doug, W4LAW

mailto:w4law@mindspring.com or
mailto:ares-races@mindspring.com

http://www.mindspring.com/~w4law

373. Re: [APRSSIG:26210] Troubleshooting U2k

From: Bob Bruninga <bruninga@nadn.navy.mil>
Date: Mon, 13 Jul 1998 13:18:54 -0400 (EDT)
To: Arte Booten <n2zrc@webspan.net>
Cc: aprssig@tapr.org
Message-ID: <Pine.SOL.3.96.980713131620.22981C-100000@arctic>
Rendered body type: text/plain

On Mon, 13 Jul 1998, Arte Booten wrote:

> I have an "early" Peet Bro's U-2000... I get no windspeed or
> direction, no (or wildly inaccurate) humidity, and the rain gauge only
> registers the first 1/100th of an inch of rain per rain event.

Check for Squirrels. My WX system is useless 'cuz teh squirrels nibble through the cable whenever they get hungry enough. My system has been off the air for years now, becuz of this never ending problem...

WB4APR

374. Re: [APRSSIG:26208] Bluetooth 2.45GHz wireless data

From: "Roderick, Ren" <ren.roderick@intp.com>
Date: Mon, 13 Jul 98 10:15:09
To: aprssig@tapr.org
Message-ID: <9806139003.AA900350109@intp.intp.com>
Rendered body type: text/plain

The 'Bluetooth' consortium has a web page:

http://www.bluetooth.com

Ren WA7QFR--

_____ Reply Separator _____
Subject: [APRSSIG:26208] Bluetooth 2.45GHz wireless data
Author: dbolduc@richland.cc.il.us
Originator: aprssig@tapr.org at Internet-Mail
Date: 7/13/98 8:31 AM

I saw short paragragh in the July 1998 PC Magazine concerning an upcoming wireless system for laptops, cellphones etc that uses 2.45 GHz for the interconnect which is capable of passing data at 1 Mbps within 10 meters or 100 meters with an amplifier. Look at Pipeline on page 9. They say it will be inexpensive! Want to read more go to do a search for bluetooth wireless
There's a lot of stuff out there and the transmitters may be had for as little as $20.00

73's

Dave,
KB9FBG

375. Re: Mackinac Island Race

From: "Mike Knapp" <mwknapp@hotmail.com>
Date: Mon, 13 Jul 1998 11:22:45 PDT
To: aprssig@tapr.org
Message-ID: <19980713182245.5037.qmail@hotmail.com>
Rendered body type: text/plain

yeah, aprs in this event would be both fun and practical. i have never raced in this event but one of the stops is in the port of the town i live in, st joseph, mi. so if anyone actually is running aprs in this event ill probably be the first one to know about it, hihi.

_____
Get Your Private, Free Email at http://www.hotmail.com

376. Re: [APRSSIG:26204] Re: Porta-Digi comleted

From: John Rauch <johnr@cycat.com>
Date: Mon, 13 Jul 1998 14:42:55 -0400
To: wn1z@sojourner.wn1z.ampr.org, APRSSIG@tapr.org
Message-ID: <3.0.3.32.19980713144255.007c4d80@cycat.com>
Rendered body type: text/plain

Yep! Got the same thing last night and this AM

John Rauch, N4YXS
At 10:29 AM 7/13/1998 -0500, you wrote:
>
>After going to this web site, the main page loaded OK but
>all the subsidiary pages would stop when the images were
>about half loaded. So i got half pictures. Anyone else
>experience this or is it just me.
>
>Orrin wn1z
>Monterey CA
>
>
>At 12:56 AM 7/13/98 -0500, William Nolle wrote:
>>Again for those that have shown an interest in the building of my
>>paorta-digi
>>it is now completed. The picture of the completed digi including the
>>camouflage
>>cover can be seen on my website. I will be removing the webpage after a
>>week
>>or so. Thank you to those that have written me about it.
>>
>>http://www.airnet.net/wa8inz
>>
>>Bill wa8inz
>>
>
>

377. RE GPS30

From: GStory@icomply.com
Date: Mon, 13 Jul 1998 13:54:32 -0500
To: aprssig@tapr.org
Message-ID: <F1C006463F86D111A7F900805FE2B3B3B9EC@lew_prods1.icomply.com>
Rendered body type: text/plain

you wrote:
<Date: Mon, 13 Jul 1998 09:21:59 -0700
<From: "Ken Mirabella" <kjm@flo-bin.com>
<Subject: Re: Garmin GPS30PC

<Consider yourself lucky. I've had a friends at my house for 4 months
and I
<can't get a beep out of it as yet.

<Has anyone else had problems with this unit?

<73, Ken, KM6YH

<-----Original Message-----
<From: Norm Rashleigh <VE3LC@hydra.carleton.ca>
<Subject: [APRSSIG:26199] Garmin GPS30PC

>I was one of the delighted souls to receive the tapr offer of the
Garmin
>GPS30PC gps units.   Shortly after I got it in the mail, I tested it
using
a
>PC terminal program and it seemed to work just fine after the many
minutes
>required to obtain a "fix".
>
>Well after many months of leaving it on the shelf awaiting some time to
play
>with it , I just got to it again.
>
>Well it doesn't work fine any more. I did get a fix, but after a few
>minutes, lost it. Another attempt. It again got acquistion and then
lost
>it. Now, it just doesn't seem to "fix" at all any more, even with the
>antenna with a good clear view of the sky (mag mounted on top of the
car).

>The data output works fine spewing forth to the pc, just no position or
>other derived GPS data in the nema sentences. Has the rx gone dead or
am I
>doing something wrong..
>
>Any ideas?
>
You may need to look into doing the "repair" that TAPR talked about
concerning the GPS30. It requires some light surgery that includes
cutting and resoldering of a certain part. I forgot which part needs to
be resoldered.   Since the page that had the info was on the page that
anounced the purchase is not on line anymore you may have to search the
sig email history for info. Seems like I saw the repair recently but
forgot were.
          Greg, is it still online and I just missed it?

Guy Story, KC5GOI
802 North Kealy
Lewisville Texas, 76567
gstory@icomply.com
fax: 972.436.2667
phone: 972.436.9600 ext 307
www.icomply.com

378. Slow Porta-Digi web page.

From: William Nolle <wa8inz@airnet.net>
Date: Mon, 13 Jul 1998 14:09:47 -0500
To: APRSsig <aprssig@tapr.org>
Message-ID: <35AA5B7B.714089A1@airnet.net>
Rendered body type: text/plain

The reason I believe a couple of people are having problems
with the pages not loading 100% is that you have to let the
whole page load before scrolling or anything else. I have
found this on many sites with large photographs. I can reduce
the size of each picture but then you will loose detail and I
didn't want to do this.

Bill wa8inz

379. My Porta-Digi

From: William Nolle <wa8inz@airnet.net>
Date: Mon, 13 Jul 1998 14:40:15 -0500
To: APRSsig <aprssig@tapr.org>
Message-ID: <35AA629F.ADE9A4BE@airnet.net>
Rendered body type: text/plain

I have received so many messages about the digi that I figured
I would post a thank you here instead of having to answer each
one. Thank you all for the great comments. I was going to
remove the page in a week but with a response like I have
received today I figured there maybe some that will want to
use it as a reference when building something similar. Like
the page says I would be glad to help anyone building one of
these or any such project after all that's what amateur radio
is about. As some have suggested that I should offer the write
a project for QST or 73's is beyond my scope since i'm not
verry good at writing articles like that Hi. Feel free to use
any of the pictures or ideas in whatever way you see fit, just
give credit where credit is due Hi. I'm also open to
suggestions on how to improve the design. My next project (A
bigger one) is to build a weather station on the same order as
the digi.

Bill wa8inz
http://www.airnet.net/wa8inz/

380. Sending Packets Frequently

From: Glenn Wiebe <gswiebe@mb.sympatico.ca>
Date: Mon, 13 Jul 1998 15:24:46 -0700
To: APRSSIG <aprssig@tapr.org>
Message-ID: <35AA892E.8A06659C@mb.sympatico.ca>
Rendered body type: text/plain

Hi all:

After operating on HF APRS only for several years (there are no others

on APRS locally - HF or VHF), I left the my station on VHF last night
just for fun. I set one rx on 144.39 and the other on 145.79 on the
Yaesu FT-5100. After 12 hours I say one station, a station near Grand
Forks,ND. Wow, my 1st every VHF APRS half contact! I think I might do
this a lot more either on VHF or on both HF & VHF and see what shows up.
Questions: (telling me to read the docs is ok but please - which of the
57 help files :-).

1) Sending the position and status packets every 20 minutes on VHF under
these conditions is not acceptable. The chances of someone seeing me
will be remote even if they are sent every minute. How can I adjust
that?

2) Is there a way when of determining whether a station was received on
HF or VHF?

BTW, the TNC is a KAM v8.0 and APRS DOS is v8.15.

Thanks & cheers.

Glenn

381. Re: [APRSSIG:26223] My Porta-Digi

From: Claude Head <k5dtn@wans.net>
Date: Mon, 13 Jul 1998 16:06:23 -0500
To: wa8inz@airnet.net
Cc: aprssig@tapr.org
Message-ID: <35AA76CE.2EB60858@wans.net>
Rendered body type: text/plain

Bill, looks like a super good job on the portable, "stealth", digi.
I have some questions.

What kind of antenna did you use for the non-yagi version?

Did you have to provide some kind of ground plane or
counterpoise, or does the antenna not need these?

Did you have to adjust the length of the antenna to
compensate for the effects of the PVC pipe enclosing
the antenna?

A suggestion in line with Bob B's comments. Looks like
the system would lend itself to a series of "modular"
power supplies that might just screw (or maybe
bayonet lock) on to the bottom of the package. Might
use the D cells that Bob talked about, the gel cells
you are using now, a longer one with more battery
capacity, or maybe even an AC powered one if you
happened to be near enough to an AC source Or
you might have two or three rechargable battery
units so that you could quickly change a discharged
unit with a charged unit, in case the use of the
system needed to span several days.

A really neat job!

73, Claude
      K5DTN

William Nolle wrote:

> I have received so many messages about the digi that I figured
> I would post a thank you here instead of having to answer each
> one. Thank you all for the great comments. I was going to
> remove the page in a week but with a response like I have
> received today I figured there maybe some that will want to
> use it as a reference when building something similar. Like
> the page says I would be glad to help anyone building one of
> these or any such project after all that's what amateur radio
> is about. As some have suggested that I should offer the write
> a project for QST or 73's is beyond my scope since i'm not
> verry good at writing articles like that Hi. Feel free to use
> any of the pictures or ideas in whatever way you see fit, just
> give credit where credit is due Hi. I'm also open to
> suggestions on how to improve the design. My next project (A
> bigger one) is to build a weather station on the same order as
> the digi.
>

> Bill wa8inz
> http://www.airnet.net/wa8inz/

382. Re: [APRSSIG:26224] Sending Packets Frequently

From: Bob Bruninga <bruninga@nadn.navy.mil>
Date: Mon, 13 Jul 1998 17:12:18 -0400 (EDT)
To: Glenn Wiebe <gswiebe@mb.sympatico.ca>
Cc: aprssig@tapr.org
Message-ID: <Pine.SOL.3.96.980713170219.7988G-100000@arctic>
Rendered body type: text/plain

On Mon, 13 Jul 1998, Glenn Wiebe wrote:

> ... I left the my station on VHF last night just for fun on 144.39...
> After 12 hours I saw a station near Grand Forks,ND. Wow..!...
> [Tell me how to: 1) Send more often than once every 20 Mins and 2)
> determine which band it came in on?

To send more often there are two ways: In the CFIG800.APR configuration file there is a line that defaults to something like 1800,maximum time between packets. That is 30 minutes. SHorten it. But this will also cause you to be very frequent on HF too.

Better way is to enter the dumb terminal screen and change your BEACON EVERY from 0 to 0/N where N is the rate you want on VHF. This will send out your BText which should have your posit in it on VHF autmoatically with the TNC whether or not APRS is operating on HF or VHF... But APRS will ZERO the BEACON each time you start the program...

ANother way is to enter MScatter mode. Then get the fans out, 'cuz ur station will key up and send dozens of packets solid for 15 seconds out of every minute!

The way to tell what band it came in on, is to look at the DIGI-PATH page.

383. New Kantronics Stuff

From: Randy Farley <rdfarley@cyberhighway.net>
Date: Mon, 13 Jul 1998 15:23:51 -0700
To: aprssig@tapr.org
Message-ID: <35AA88F7.3559@cyberhighway.net>
Rendered body type: text/plain

The following message was sent to the Treasure Valley Radio Association club members of Idaho and Oregon today.

_____
FYI from Stephanie

Here is the straight scoop from Kantronics via a phone call from me this am to Mary in tech support. I figured I would cut through all the rumor and misinformation that is circulating by going to the horse's mouth!

KPC-3 Plus v8.3 goes on sale today, 07/13/98. This new version will allow you to wire the GPS into the radio port so the serial port is now freed up for connection to another device, thereby eliminating the need for a "Y" cable. If you purchase a KPC-3 Plus v8.2 Kantronics will send you the new EPROM to upgrade you for free with proof of purchase.

They are working on an as of yet unnamed matching transmitter KIT. This kit will fit into a case that will match the dimensions of the KPC-3 Plus. It is a transmitter only and is a KIT so will require assembly. It will sell for $79.95. This unit should be available by August 1, 1998 but could be ready earlier. In any case will be shipping no later than August 15, 1998 which was their original target date. They are running ahead of schedule on it.

They have discussed, but have no current plans, to make a GPS unit to build into one of these or another unit. This is in the discussion stage only at this time. If you want to see this happen call or write them as they are VERY interested in what the end users have to say. Comments from users are what has made possible the two items above so let it rip if you are interested.

Please feel free to forward this information to anyone you may think would find it of use.
Thanks.

--

Stephanie Steele

```
--
Regards,
Randy D. Farley
KC7HZE
rdfarley@cyberhighway.net
GPS coordinates: 44.02620N/-116.93130W
  N
W + E
  S
```

384. APRSdos and WIN95

```
From: "John Blowsky" <kb2scs@worldnet.att.net>
Date: Mon, 13 Jul 1998 17:24:36 -0400
To: "aprssig" <aprssig@tapr.org>
Message-ID: <19980713214020.FYYI25531@default>
Rendered body type: text/plain
```

```
Hi All
       I realize that this topic comes up from time to time.
Not sure it is even a problem any more. What I am referring to
is being able to run APRSdos in the background on a WIN95 box.

The way I do it is set up a short cut on my desktop to start
APRSdos with.
I set it up in the short cut for APRSdos to run full screen.
When APRSdos starts I let it go thru all its startup
procedure.
Once it is up and running I turn off the beeps.
Then I press the following keys.
I hold down the ALT key then press the Tab key.

This Key combo causes APRSdos to be minimize on the Taskbar
at the bottom of the screen.

There it sits running in the back ground happy as anything
Note I do not at any time put APRSdos in WINdoze mode.

Also note that the pc I do this on only is used for two
things. 1) Running APRSdos when I am home
        2) Running NOS all the time.
So I have NOS and APRSdos running on the PC at the same time
most of the time.
pc 50 MHz
22 meg memory

Note if you do not turn off the Beeps then when APRSdos
beeps while minimized you get a solid beep until you
maximize APRSdos again.

So try this method and see if it works on your machine.

Sorry for the band width if this was old news for everyone.

Let us hope we never witness the "Silence Of The Hams"
73 DE John  KB2SCS
   AmprNet:     kb2scs@kb2scs.ampr.org [44.68.8.173]
   Mail To:     kb2scs@groucho.kc2ky.ampr.org [44.68.8.4]
   E-Mail:      kb2scs@worldnet.att.net
```

385. TNC wanted:kpc4

```
From: Wes Johnston <kd4rdb@eagnet.com>
Date: Mon, 13 Jul 1998 18:24:40 -0400
To: aprssig@tapr.org
Message-ID: <3.0.32.19980713182439.006a0a08@gena>
Rendered body type: text/plain
```

```
We are about to install our 2nd mic encoder digi here in savannah.  Anyone
know of a KPC4 for sale?  Version 5 firmware is a plus.
Wes
Email:   mailto:kd4rdb@usa.net
APRS:    http://www.qsl.net/kd4rdb/aprs.htm
A good traveler has no fixed plans and is not intent on arriving.
```

386. Winaprs

```
From: deunju@juno.com (DALE E URBAN)
Date: Mon, 13 Jul 1998 17:25:41 CDT
```

To: aprssig@tapr.org
Message-ID: <19980713.172545.8462.0.DEUNJU@juno.com>
Rendered body type: text/plain

Does Winaprs run ok in all windows envir, 95,98,NT,3.1?
Dale Urban N0KQX
Garden City Ks.

_____
You don't need to buy Internet access to use free Internet e-mail.
Get completely free e-mail from Juno at http://www.juno.com
Or call Juno at (800) 654-JUNO [654-5866]

387. Re: [APRSSIG:26227] New Kantronics Stuff

From: Jon Ogden <jono@enteract.com>
Date: Mon, 13 Jul 98 18:05:27 -0500
To: <rdfarley@cyberhighway.net>, <aprssig@tapr.org>
Message-ID: <199807132257.RAA18916@tapr.org>
Rendered body type: text/plain

>They are working on an as of yet unnamed matching transmitter KIT. This
>kit will fit into a case that will match the dimensions of the KPC-3
>Plus. It is a transmitter only and is a KIT so will require assembly. It
>will sell for $79.95. This unit should be available by August 1, 1998
>but could be ready earlier. In any case will be shipping no later than
>August 15, 1998 which was their original target date. They are running
>ahead of schedule on it.

The transmitters are supposed to be ready for Kantronics July 25th
demo/class at AES in Milwaukee. Part of the days events are for visiting
folks to assemble one of these TXs. Unfortunately, I won't be able to
attend. :-(

73,

Jon
KE9NA

Jon Ogden
KE9NA

http://www.qsl.net/ke9na

"A life lived in fear is a life half lived."

388. PEET Bros WX station

From: Wes Johnston <kd4rdb@eagnet.com>
Date: Mon, 13 Jul 1998 20:09:41 -0400
To: aprssig@tapr.org
Message-ID: <3.0.32.19980713200939.006942d0@gena>
Rendered body type: text/plain

http://www.peetbros.com/part3.htm#weathervox

anyone thought of putting this voice readout on their voice repeater?
press a few keys on the DTMF pad, and the repeater could read of the
weather... interesting.
Wes
Email: mailto:kd4rdb@usa.net
APRS: http://www.qsl.net/kd4rdb/aprs.htm
A good traveler has no fixed plans and is not intent on arriving.

389. Re: New Kantronics Stuff

From: John Dolan <jdolan@erols.com>
Date: Mon, 13 Jul 1998 20:20:26 -0700
To: aprssig@tapr.org
Message-ID: <35AACE7A.3522@erols.com>
Rendered body type: text/plain

Stephanie said:
> They are working on an as of yet unnamed matching transmitter KIT. This
> kit will fit into a case that will match the dimensions of the KPC-3
> Plus. It is a transmitter only and is a KIT so will require assembly. >
> It will sell for $79.95. This unit should be available by August 1, >
> 1998.

Now I'm am confused... because I just checked back with their Web page
and there is an ad for a seminar on July 25 held by Phil at AES where
everyone buys a Transmitter Kit for $39.95 and then in the seminar they
build it with help from Phil, and take it home with them.

Who do we believe, someone named Mary in Tech Support or Phil who asked
someone to post a message here a few days ago about an under $50 TX?
Which is why I went to their Web page and found the ad.
--

Regards,
John Dolan
K3FIG
jdolan@erols.com

390. TLE's (was: APRS via MIR)

From: Arte Booten <n2zrc@webspan.net>
Date: Mon, 13 Jul 1998 20:32:19 -0400
To: APRS SIG <aprssig@tapr.org>
Message-ID: <35AAA713.A2883EE2@webspan.net>
Rendered body type: text/plain

Hi all,

I recently asked for a site to get Two Line Elements. These are the
best of them:

http://celestrak.com/NORAD/elements/index.html
ftp://ftp.celestrak.com/pub/elements
http://www.amsat.org/amsat/keps/menu.html
http://www.amsat.org/amsat/ftp/keps/current/nasa.all

Thanks to all for their prompt responses. I share them with the
list. 73
--
Arte Booten <n2zrc@webspan.net> EC/RO for Bronx County, NYC ARES/RACES
PGP Key Fingerprint: 22E5 3EC7 4E3C 2460 C570 BACA E48B 71D5 0F33 54AD
Riverdale, NY [FN30bu] Cruise Missile Coordinates: 4052.71N/07354.06W
TM-V7a/KPC-3 6.0/GPS-III Packet: N2ZRC@KB2VLX.#BRONX.NY.USA.NA

"There is an undetonated Chroniton Torpedo lodged in the hull."
"Do not attempt to disarm it until I arrive." "Arrive quickly!"
-Seven of Nine & Tuvok, Star Trek: Voyager; "Year of Hell"

391. Re: Troubleshooting U2k

From: Arte Booten <n2zrc@webspan.net>
Date: Mon, 13 Jul 1998 17:48:53 -0400
To: Bob Bruninga <bruninga@nadn.navy.mil>
Cc: APRS SIG <aprssig@tapr.org>
Message-ID: <35AA80C3.1CED8925@webspan.net>
Rendered body type: text/plain

Hi all,

Bob Bruninga replied:

>Check for Squirrels.

This may be a problem in Glen Burnie (and, indeed, in many locales,
as those darned critters are apparently pretty smart about getting to
edibles,) but my U2k is located atop a six-story apartment building
and then they'd have to shimmy up a 20 foot steel mast, then out about
three feet on PVC crossmembers in order to get to the thing. In all the
years (over 20!) that I've lived here I don't ever recall seeing a squ-
irrel up there on "tar beach". Nice try, Bob. No cigar. 73
--
Arte Booten <n2zrc@webspan.net> EC/RO for Bronx County, NYC ARES/RACES
PGP Key Fingerprint: 22E5 3EC7 4E3C 2460 C570 BACA E48B 71D5 0F33 54AD
Riverdale, NY [FN30bu] Cruise Missile Coordinates: 4052.71N/07354.06W
TM-V7a/KPC-3 6.0/GPS-III Packet: N2ZRC@KB2VLX.#BRONX.NY.USA.NA

"There is an undetonated Chroniton Torpedo lodged in the hull."
"Do not attempt to disarm it until I arrive." "Arrive quickly!"
-Seven of Nine & Tuvok, Star Trek: Voyager; "Year of Hell"

392. Re: [APRSSIG:26227] New Kantronics Stuff

From: Kevin Kelly <kkelly@radix.net>
Date: Mon, 13 Jul 98 21:36:49 -0500

To: Randy Farley <rdfarley@cyberhighway.net>,
        "aprssig@tapr.org" <aprssig@tapr.org>
Message-ID: <199807140134.VAA21623@saltmine.radix.net>
Rendered body type: text/plain

Greetings SIG:

Kantronics will upgrade you free only If you purchased a KPC 3 Plus within
the last 30 days. After 30 days get out your credit card.

73,
Kevin Kelly/N6QAB
kkelly@radix.net

393. Re: [APRSSIG:26233] Re: New Kantronics Stuff

From: "Roderick, Ren" <ren.roderick@intp.com>
Date: Mon, 13 Jul 98 18:35:56
To: aprssig@tapr.org
Message-ID: <9806139003.AA900380156@intp.intp.com>
Rendered body type: text/plain

Do the words "Final Beta Test" mean anything????

     Ren WA7QFR

_____ Reply Separator _____
Subject: [APRSSIG:26233] Re: New Kantronics Stuff
Author: jdolan@erols.com
Originator: aprssig@tapr.org at Internet-Mail
Date: 7/13/98 6:00 PM

Stephanie said:
> They are working on an as of yet unnamed matching transmitter KIT. This
> kit will fit into a case that will match the dimensions of the KPC-3
> Plus. It is a transmitter only and is a KIT so will require assembly. >
> It will sell for $79.95. This unit should be available by August 1, >
> 1998.

Now I'm am confused... because I just checked back with their Web page
and there is an ad for a seminar on July 25 held by Phil at AES where
everyone buys a Transmitter Kit for $39.95 and then in the seminar they
build it with help from Phil, and take it home with them.

Who do we believe, someone named Mary in Tech Support or Phil who asked
someone to post a message here a few days ago about an under $50 TX?
Which is why I went to their Web page and found the ad.
--

Regards,
John Dolan
K3FIG
jdolan@erols.com

394. Re: [APRSSIG:26180] Re: Doppler systems doppler

From: Bob Merchant <KB8AST@mwweb.com>
Date: Mon, 13 Jul 1998 21:50:08 -0400
To: "David VanHorn" <dvanhorn@cedar.net>, <aprssig@tapr.org>
Message-ID: <3.0.5.32.19980713215008.007ca5c0@MAIL.mwweb.com>
Rendered body type: text/plain

At 10:50 PM 7/12/98 -0500, you wrote:
>
> How about stacking two bridges...normal route into the tnc via the
>>radio's through the first tnc, out the computer port into the second
>>bridge's tnc port, and out it's computer port. If each bridge had 4
>>ports...Computer, TNC, port 3 (programmable) and port 4 (also
>>programmable)..you could run (1-1) computer, (1-2) inter bridge to (2-1),
>>(1-3) WX station, (1-4) Doppler, 2-2) TNC, (2-3) GPS (for time correction
>>and present location), and still have one more port (2-4) for your
>>lightning detector....or whatever. 8 UARTs, 6 useable ports...plus the
>>question arises as to how you program bridge 2...other than connect your
>>computer directly to the computer port on the bridge PCB.
>
>You lost me completely here.
>

I hope this makes it...

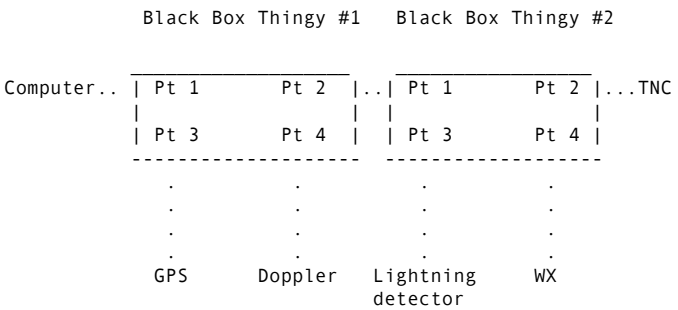

The basic problem as you can see, you loose 2 ports in an operation like this...port 4 of bridge 1, and port 1 of bridge 2. If you build a standard bridge of 4 ports, expandable one at a time to 8 ports, you can use each port you add.

Basically:

General theory in normal APRS operation...
1) Port 1 receives everything from all ports on an individual bridge.
2) All data going into the bridge from port 1, goes to Port 2.
3) Ports 3 and 4 in APRS mode are listen only ports.
4) Data flow across the bridge is "seamless" and what is transmitted at each port's output at both Port 1 and Port 2 as required exactly the same as it entered the bridge. The only allowable difference is a change in baud rate and word makeup, so it may enter the computer at a particular format and speed preset by the operator.

General theory in configuration operation.
1) The device works at a particular baud rate, set by the manufacturer, on the inter port bus.
2) Each port device should be provisionable as to communication baud rate, word length, stop bits, and parity.
3) Each port should be able to change information as required to compensate to the operation requirements of the computer communication port.
4) Should occasion require, it should be possible to talk through each Thingy to the electronics connected to the UARTs.

If the computer port is running at 115,200 baud, 8 bit word, no parity, 1 stop bit...the port device needs to be able to correct a connected device should that device be running 300 baud, 7 bit word, Odd parity, with 2 stop bits. I question if the port device will automatically setup and run with whatever is connected to it. If it does, it is "smarter" than I give it credit. In most of what I have seen, you need to send a continuously recognizable pattern in order to boot the "auto-baud" abilities of the detecting device. The device must recognize what is being transmitted before it can adjust itself to the incoming data stream.

In our case that information, stored in a ram chip internal to the bridge needs to be addressable...and if the ram chip is running some sort of "fill in the blanks" software, the ports would be remotely programmable from the computer (port 1 device). If you stack bridges, then you need some way to setup a communication path to the bridge. If the bridges carry an identifying number or letter (such as bridge 0 1 ... 9) it might be feasible to send something like "CONNECT BRIDGE 2" from the computer and have bridge 2's software package come up on line. Perhaps a command like "LIST" would list out the individual provisioning for each port. Something like "SAVE BRIDGE 2" could be employed to get you out of the software package and have the information saved in ram; whereas, "EXIT" or "END" exits the software without altering the contents of ram.

It might be also beneficial to permit temporary shutdown of a particular port...such as when you want to run the Dopp scanner, and WX keeps changing your pointer as the wind changes direction. If you could shut down WX for a period of time, the swing of the wind will not effect what is displayed on the screen.

Another thought is the possibility of changing the software internal to the bridge. Perhaps some sort of "UP" or "UPLOAD" command might be useful.

G. Robert Merchant
440-259-3555
3360 River Road
Perry, Ohio 44081-9622

<KB8AST@mwweb.com>

395. Re: [APRSSIG:26180] Re: Doppler systems doppler

From: "David VanHorn" <dvanhorn@cedar.net>
Date: Mon, 13 Jul 1998 21:08:30 -0500
To: <aprssig@tapr.org>, "Bob Merchant" <KB8AST@mwweb.com>
Message-ID: <010201bdaecc$508e33e0$a3f135ce@xenu>
Rendered body type: text/plain

>>You lost me completely here.
>>
>
>I hope this makes it...
>

Picture was asciirambled, but I get the idea.
>
>
> The basic problem as you can see, you loose 2 ports in an operation like
>this...port 4 of bridge 1, and port 1 of bridge 2. If you build a standard
>bridge of 4 ports, expandable one at a time to 8 ports, you can use each
>port you add.
>

The basic device would have a "master" port and as many as 8 serial ports.
I think the base config that makes sense is probably four ports.

Nothing prevents stacking an additional device onto one of the ports, but
APRS would have to "double wrap" the data. Nothing hard, just inefficient.

Setting the port parms is just a matter of having APRS send some config
data.
I'd rather not code a user interface in there, the exceptions would drive me
nuts.
The basic idea is just to let APRS take more data in through "virtual"
serial ports,
without requiring any fixed lengths, or anything else out of the ordinary
for the
devices that APRS is talking to.

It's so hard to get this across without pictures..

One possibility I'm looking at is to add a GPS power supply to the design,
such that you can select the voltage (jumper) and what port that voltage is
presented to. This would be in addition to a 12V output. This lets you
connect a device to the system through a single cable, rather than having
a "data spiderweb" and a "power spiderweb" in the system. Some devices
will have to have a cable with two ends on it to accomplish this, but that's
not my fault :)

IIRC, the GPS units are pretty much in two flavours, the 12V ok type, and
the 7V type.   Are there any other units out there that can't take either
cleaned
up 12V from the car, or regulated 7V?

396. Re: [APRSSIG:26171] aprs.rutgers.edu down?

From: kd4gnx@juno.com (Richard E Jones)
Date: Mon, 13 Jul 1998 00:20:39 -0400
To: aprssig@tapr.org
Message-ID: <19980713.222305.-4039779.0.kd4gnx@juno.com>
Rendered body type: text/plain

Not you...
I tried several times earlier today, Sunday about 0000z, no connect???

73 from Richard
!3802.98n/08444.54w
First registered APRS user in the Bluegrass State / Dayton '94
Versailles, KY.   Now on 144.390

On Sun, 12 Jul 1998 13:55:10 -0500 (CDT) Earl Needham <kd5xb@amsat.org>
writes:
>
>   I've tried for several days to get to http://aprs.rutgers.edu.
> It appears
>to be down. Is it just me?

397. Megallan Skystar Plus interface

From: Rick Olsen <N6NR@xc.org>
Date: Mon, 13 Jul 1998 20:35:21 +0100
To: aprssig@tapr.org
Message-ID: <35AA617A.2E8EC378@xc.org>
Rendered body type: text/plain

I just purchased a Skystar Plus for my Cherokee 140 and discovered that it has an NMEA port on the side. I think it is about time that I give APRS a try. I downloaded APRS818 for DOS and loaded it on an old 286/287 luggable PC. I verified that the Skystar is talking to the serial port using an old version of Procomm. However, I have not yet been able to get APRS818 to talk to the Skystar.

Considering the fact that I am a total newbie in this arena, could somebody point me to the "ON" switch?

I am yours sincerely (and totally embarrassed to boot),

Rick, N6NR

==========

You can tell you're getting old when the person answers, but you can't remember who you called.

398. Re: [APRSSIG:26227] New Kantronics Stuff

From: Byron Smith <wa6ylb@theworks.com>
Date: Mon, 13 Jul 1998 21:42:42 -0700
To: rdfarley@cyberhighway.net
Cc: aprssig@tapr.org, aprs@lists.monterey.edu
Message-ID: <199807140456.VAA17524@ns.theworks.com>
Rendered body type: text/plain

>KPC-3 Plus v8.3 goes on sale today, 07/13/98. This new version will
>allow you to wire the GPS into the radio port so the serial port is now
>freed up for connection to another device, thereby eliminating the need
>for a "Y" cable. If you purchase a KPC-3 Plus v8.2 Kantronics will send
>you the new EPROM to upgrade you for free with proof of purchase.

Bummer. Its my understanding that only up to 2400 baud is availible on this "GPS" port. Too bad for us 4800 fixed baud rate Garmin users :-(

Byron Smith
wa6ylb@theworks.com - Webpage: http://www.theworks.com/~wa6ylb
wa6ylb@wa6ylb.#cca.ca.usa.noam

A truely wise man never plays leap frog with a unicorn.

399. Re: [APRSSIG:26217] Re: Troubleshooting U2k

From: Byron Smith <wa6ylb@theworks.com>
Date: Mon, 13 Jul 1998 21:32:37 -0700
To: bruninga@nadn.navy.mil
Cc: aprssig@tapr.org
Message-ID: <199807140456.VAA17516@ns.theworks.com>
Rendered body type: text/plain

Conduit. Metal conduit... gun. varmit gun...

At 12:24 PM 7/13/98 -0500, you wrote:
>On Mon, 13 Jul 1998, Arte Booten wrote:
>
>>   I have an "early" Peet Bro's U-2000...   I get no windspeed or
>> direction, no (or wildly inaccurate) humidity, and the rain gauge only
>> registers the first 1/100th of an inch of rain per rain event.
>
>Check for Squirrels. My WX system is useless 'cuz teh squirrels nibble
>through the cable whenever they get hungry enough. My system has been off
>the air for years now, becuz of this never ending problem...
>
>WB4APR
>

Byron Smith
wa6ylb@theworks.com - Webpage: http://www.theworks.com/~wa6ylb
wa6ylb@wa6ylb.#cca.ca.usa.noam

A truely wise man never plays leap frog with a unicorn.

400. Lightning Detector Design....

From: Darryl Smith <vk2tds@ozemail.com.au>
Date: Mon, 13 Jul 1998 18:30:08 +1000
To: aprssig@tapr.org
Message-ID: <35A9C590.26E81410@ozemail.com.au>
Rendered body type: text/plain

Hello All....

Has anyone actually experimented with building their own lightning detector (Rather than just the interface). I have discussed the idea with one of the radio guru's at the local ham club. He sugested a FET with an antenna (and a couple of diodes to protect the input) and then send the output to an opto-coupler, maybe through a filter.

Power Supply is a problem, but AA batteries could work here. I guess it is time for me to pick up a few fets at the local electronics store tomorrow and do some testing. If everything goes well I think it should be possible to have a detector (except the PIC) for under $10.

Darryl VK2TDS

401. Free to good home...

From: Mark Fellhauer <sparkfel@primenet.com>
Date: Tue, 14 Jul 1998 01:54:52 -0700
To: aprssig@tapr.org
Message-ID: <3.0.5.32.19980714015452.007df210@pop.primenet.com>
Rendered body type: text/plain

I have a old 4.5 volt Skil Twist power-screwdriver with a dead NiCad. It's been replaced with a B&D VersaTool (the kind with pull-out battery packs).

Anyway, I have a perfectly good, but non-working, power screwdriver. It would be a shame to throw it away, but I have no use for it. Nothing would make me happier but to know that this tool made its way into the heart of a screwdriver antenna or some other worthy ham radio project.

The drill-driver didn't cost more than $20 new several years ago, so I will offer it FREE to anyone on the SIG who is willing to pay the shipping (or pick it up). I removed the dead NiCad so it'll be lighter (it wasn't leaking). I can't see UPS ground charges for it going over $5. I'll even throw in the charger.

My only stipulations are that the tool be used for a ham radio project, or the NiCad pack be replaced (it uses 3 sub-C cells) and the tool kept. I don't want it to be resold as I could do that myself. Anyway, if I see it at your next garage sale or on your HamFest table I reserve the right to yell at you and take the drill-driver back.

One person is already mulling over whether he wants it, so he has first pick, otherwise it goes to the first person who emails me (privately) with a sincere request backed up with a check or M.O. for shipping; or who shows up on my doorstep.

73,

Mark
KC7BXS
sparkfel@primenet.com

402. Ft. Tuthill and other misc. ramblings

From: Mark Fellhauer <sparkfel@primenet.com>
Date: Tue, 14 Jul 1998 02:31:24 -0700
To: aprssig@tapr.org
Message-ID: <3.0.5.32.19980714023124.007de280@pop.primenet.com>
Rendered body type: text/plain

July has come to Arizona and that means only four things. Heat, humidity, thunderstorms, and Ft. Tuthill - the greatest Hamfest this side of the Mississippi.

And since Ft. Tuthill is in the high pines of the Coconino County Fairgrounds, just outside of Flagstaff, it is also pleasantly cool. Anyway, this year's hamfest falls on Friday, July 24 through Sunday, July 26.

If you live in Arizona, California, Nevada, Utah, Colorado, New Mexico, or

northern Mexico this hamfest is well worth the travel time and expense. Yaesu and other commercial vendors will be there. I'm told that Yaesu will have a demo of the FT-100 Field Commander at their booth (I'm saving my pennies for one). There were some great meetings and seminars last year, including an AMSAT Phase 3-D Q&A session and a demo of A0-27.

And, of course, I'll be there. I'll be running APRS on the tracker on the way up, and, if time and technology permits will setup a laptop/APRS digi at the campground.

Also, Fry's Electronics has a Linksys 12 to 120 volt power inverter (140 Watts continuous) for $30! I bought one and it works quite well. It's going to Ft. Tuthill, too.

If you do come, don't forget to show up at the Arizona Network Intertie Group meeting. We've had a good APRS "show of force" in the past and that does make an impression on ARCA, Dan M., and the rest of the I.G. people. It's about time we see some more AZ APRS links to other areas and states (and the internet), IMHO.

73,

Mark
KC7BXS

403. RE: [APRSSIG:26242] Re: New Kantronics Stuff

From: "Kevin Kelly" <kkelly@radix.net>
Date: Tue, 14 Jul 1998 06:37:51 -0400
To: <wa6ylb@theworks.com>, <aprssig@tapr.org>
Message-ID: <000001bdaf13$740eac40$d5b1e58c@kellykm-r>
Rendered body type: text/plain

-----Original Message-----
From: aprssig@tapr.org [mailto:aprssig@tapr.org]On Behalf Of Byron Smith
Sent: Tuesday, July 14, 1998 1:02 AM
To: aprssig@tapr.org
Subject: [APRSSIG:26242] Re: New Kantronics Stuff

Byron Smith wrote...Bummer. Its my understanding that only up to 2400 baud is availible on this
"GPS" port. Too bad for us 4800 fixed baud rate Garmin users :-(

Not so according to the Kantronics webpage www.kantronics.com. Below is the paragraph that addresses the port speed.

"The KPC-3 Plus is configured for GPS tracker operation in the normal manner, as outlined the Modes of Operation section of the User=s Guide. When using the second port for attachment of the GPS device, the only setup changes required are to turn on and configure this port, using the GPSPORT command. The GPSPORT command allows you to configure a baud rate of 300, 600, 1200, 2400, or 4800 for the GPS device, use normal or inverted data, and use or not use checksums sent by some NMEA strings. If GPSPORT is set to a baud rate of A0,@ then the port is disabled.

73,
Kevin Kelly/N6QAB
kkelly@radix.net

404. Re: [APRSSIG:26242] Re: New Kantronics Stuff

From: Wes Johnston <kd4rdb@eagnet.com>
Date: Tue, 14 Jul 1998 07:47:19 -0400
To: wa6ylb@theworks.com, aprssig@tapr.org
Message-ID: <3.0.32.19980714074701.00715408@gena>
Rendered body type: text/plain

Directly from the kantronics' web page:
The KPC-3 Plus is configured for GPS tracker operation in the normal manner, as outlined the Modes of Operation section of the User=s Guide. When using the second port for attachment of the GPS device, the only setup changes required are to turn on and configure this port, using the GPSPORT command. The GPSPORT command allows you to configure a baud rate of 300, 600, 1200, 2400, or 4800 for the GPS device, use normal or inverted data, and use or not use checksums sent by some NMEA strings. If GPSPORT is set to a baud rate of A0,@ then the port is disabled.

http://www.kantronics.com/from.htm#Using A Second Serial Port in the KPC-3 Plus for GPS/APRS*

At 11:59 PM 7/13/98 -0500, you wrote:
>
>>KPC-3 Plus v8.3 goes on sale today, 07/13/98. This new version will
>>allow you to wire the GPS into the radio port so the serial port is now
>>freed up for connection to another device, thereby eliminating the need
>>for a "Y" cable. If you purchase a KPC-3 Plus v8.2 Kantronics will send
>>you the new EPROM to upgrade you for free with proof of purchase.
>
>Bummer. Its my understanding that only up to 2400 baud is availible on this
>"GPS" port. Too bad for us 4800 fixed baud rate Garmin users :-(
>
>
>
>Byron Smith
>wa6ylb@theworks.com - Webpage: http://www.theworks.com/~wa6ylb
>wa6ylb@wa6ylb.#cca.ca.usa.noam
>
>A truely wise man never plays leap frog with a unicorn.
>
>
Wes
Email: mailto:kd4rdb@usa.net
APRS: http://www.qsl.net/kd4rdb/aprs.htm
A good traveler has no fixed plans and is not intent on arriving.

405. Active GPS Antennas

From: "Davis, Bill R" <bill.r.davis@lmco.com>
Date: Tue, 14 Jul 1998 07:16:09 -0500
To: "'aprssig@tapr.org'" <aprssig@tapr.org>
Message-ID: <F14ABB2CA0BAD011966F0000F802BA9F03144B96@emss07m02.lmtas.lmco.com>
Rendered body type: text/plain

.I am testing an active GPS antenna with our Garmin 45XL. It is a homebrew
patch with an amplifier. It also has a "front end" designed to eliminate
interference from the 2 meter band. The Garmin seems to hate it. Everything
seems to work well until you start moving. The more rapid the changes in
direction come, the worse the receiver hears. Rapid change in direction
effects the standard passive antenna, but not as much. The same active
antenna works well on the Tripmate.

Anyone have experience with active antennas on the Garmin 45XL.

Thanks,

Bill Davis, KG5IE
North Texas Balloon Project

406. Re: New Kantronics Stuff

From: kd4emi@juno.com (Michael A Kantor)
Date: Tue, 14 Jul 1998 08:22:46 -0400
To: wa6ylb@theworks.com
Cc: aprssig@tapr.org
Message-ID: <19980714.082406.4302.0.kd4emi@juno.com>
Rendered body type: text/plain

Bummer. Its my understanding that only up to 2400 baud is availible on
this
"GPS" port. Too bad for us 4800 fixed baud rate Garmin users :-(

Reply--
I thought Garmin baud was adjustable in the menu?

Mike KD4EMI@JUNO.COM

_____
You don't need to buy Internet access to use free Internet e-mail.
Get completely free e-mail from Juno at http://www.juno.com
Or call Juno at (800) 654-JUNO [654-5866]

407. Kantronics GPS port (KPC3 Plus 8.3)

From: Michael Huslig <mhuslig@idir.net>
Date: Tue, 14 Jul 1998 09:09:19 -0500
To: aprssig@tapr.org
Message-ID: <199807141309.IAA01015@mail.kc.idir.net>

Rendered body type: text/plain

The GPSPORT in the KPC3 Plus 8.3 firmware is a new feature for which the hardware was not originally designed. The 8.3 firmware allows the use of the External Carrier Detect pin on the radio connector as an input for serial GPS strings. Using interrupts, the GPSPORT uses a firmware UART which is somewhat dependant on what else is going on inside the KPC3 Plus. Sitting idle, the KPC3+ was accepting GPS strings on the XCD pin at 4800 without any problem. However, when I did a loop back test connecting full duplex to the internal BBS via MYALIAS and doing a "help" dump, I did get invalid checksums on about 1 in 10 GPS strings at 4800. When I slowed the GPSPORT to 2400, I did not get any invalid GPS strings. The GPSPORT can be configured to accept only NEMA strings with valid checksums; checksums are required on only a handful of NEMA strings, but some GPS units can put them on all strings. Another command in the 8.3 KPC3+ is GPSTIME; it specifies which NEMA string to use to optionally update the internal clock with GPS time; for this function, we require the NEMA string specified must have a valid checksum.

Although the GPSPORT cannot run perfectly at 4800 under all circumstances, we felt that it could still be a useful feature for most applications.

Mike Huslig
(mhuslig@kantronics.com)

408. Re: [APRSSIG:26247] Re: New Kantronics Stuff

From: Bob Bruninga <bruninga@nadn.navy.mil>
Date: Tue, 14 Jul 1998 12:36:26 -0400 (EDT)
To: Kevin Kelly <kkelly@radix.net>
Cc: aprssig@tapr.org
Message-ID: <Pine.SOL.3.96.980714123429.5940A-100000@arctic>
Rendered body type: text/plain

> Byron Smith wrote...Bummer. Its my understanding that only up to 2400 baud
> is availible on this "GPS" port. Too bad for us 4800 fixed baud rate

Kevin wrote:>
> command. The GPSPORT command allows you to configure a baud rate of 300,
> 600, 1200, 2400, or 4800 for the GPS device...

THe probelm is data verbosity. If you can turn off most sentences except for RMC or GGA, then you CAN operate at 4800, I think. Just dont let it send 12 other sentences at the same time..

409. APRS on MIR keps

From: Bob Bruninga <bruninga@nadn.navy.mil>
Date: Tue, 14 Jul 1998 12:38:02 -0400 (EDT)
To: aprssig@tapr.org
Message-ID: <Pine.SOL.3.96.980714123638.5940B-100000@arctic>
Rendered body type: text/plain

SOmeone asked for MIR keps, since APRS (from school stations is now authorized on a routine basis). Here they are:

```
Mir
1 16609U 86017A   98195.08773372 0.00016347  00000-0  16361-3 0  6294
2 16609  51.6599 270.3663 0006663 218.2013 141.8509 15.65705008708273

Satellite: Mir
Catalog number: 16609
Epoch time:      98195.08773372        (14 JUL 98   02:06:20.19 UTC)
Element set:     NORAD-629
Inclination:       51.6599 deg
RA of node:       270.3663 deg              Mir Space Station
Eccentricity:    0.0006663                  Orbital Elements
Arg of perigee:   218.2013 deg
Mean anomaly:     141.8509 deg
Mean motion:   15.65705008 rev/day      Semi-major Axis: 6749.3441 Km
Decay rate:       0.16E-03 rev/day*2    Apogee  Alt:        375.45 Km
Epoch rev:           70827              Perigee Alt:        366.46 Km

COmplements of Ron Parise, WA4SIR
Goddard Space Flight Center
----
Via the amsat-bb mailing list at AMSAT.ORG courtesy of AMSAT-NA.
To unsubscribe, send "unsubscribe amsat-bb" to Majordomo@amsat.org
```

410. RE: [APRSSIG:26252] Re: New Kantronics Stuff

From: "Schwartz, Dave G" <dschwart@exchange.Waterloo.NCR.com>
Date: Tue, 14 Jul 1998 13:00:14 -0400
To: "'aprssig@tapr.org'" <aprssig@tapr.org>
Message-ID: <76EFB5E1D14BD111AA180000C0FE0300D8B6DA@53svr17.waterloo.ncr.com>
Rendered body type: text/plain

I think I have a reference somewhere on how to do this, but can anyone refresh my memory?

-----Original Message-----
From: aprssig@tapr.org [mailto:aprssig@tapr.org]On Behalf Of Bob Bruninga
Sent: July 14, 1998 12:43 PM
To: aprssig@tapr.org
Subject: [APRSSIG:26252] Re: New Kantronics Stuff

THe probelm is data verbosity. If you can turn off most sentences except for RMC or GGA, then you CAN operate at 4800, I think. Just dont let it send 12 other sentences at the same time..

411. Added Porta-Digi pages

From: William Nolle <wa8inz@airnet.net>
Date: Tue, 14 Jul 1998 06:13:55 -0500
To: APRSsig <aprssig@tapr.org>
Message-ID: <35AB3D73.E12E9839@airnet.net>
Rendered body type: text/plain

I have added 3 more pages to the Porta-Digi web site. I only placed one picture per page this may help the people that have problems with a partial load. By the way that is not the web pages fault but rather your ISP Hi. The 3 added pages show the antenna i'm using, the antenna support tube, aluminum antenna bracket. By the way if any of the Ham magazines are interested on doing a article on the digi I now have a volunteer gosth writer so I may attempt this after all. By the way I have received around 35 messages commenting on the digi and again I want to thank all of you for your kind words and support.

--
Bill Nolle wa8inz
wa8inz@airnet.net
wa8inz@amsat.org
Hazel Green, AL

412. Re: [APRSSIG:26251] Kantronics GPS port (KPC3 Plus 8.3)

From: Byron Smith <wa6ylb@theworks.com>
Date: Tue, 14 Jul 1998 11:52:28
To: mhuslig@idir.net
Cc: kkelly@radix.net, bhildebrand@earthlink.net, kd4rdb@eagnet.com,
aprssig@tapr.org, aprs@lists.monterey.edu
Message-ID: <3.0.1.16.19980714115228.2a5f5d20@theworks.com>
Rendered body type: text/plain

Thank you for bringing this up. This was the information I thought I had read on the 4800 baud issue. As you mention, it probably isnt going to be a problem a
most trackers arent using the that much CPU resources while going mobile. Sounds like we should try it out at 4800 baud anyway, and go for it.

--snip---
>Sitting idle, the KPC3+ was accepting GPS strings on the XCD pin at 4800
>without any problem. However, when I did a loop back test connecting full
>duplex to the internal BBS via MYALIAS and doing a "help" dump, I did get
>invalid checksums on about 1 in 10 GPS strings at 4800. When I slowed the
>GPSPORT to 2400, I did not get any invalid GPS strings.
--snip---

>Although the GPSPORT cannot run perfectly at 4800 under all circumstances,
>we felt that it could still be a useful feature for most applications.
>
>Mike Huslig
>(mhuslig@kantronics.com)

Byron Smith
wa6ylb@theworks.com - Website: theworks.com/~wa6ylb
wa6ylb@wa6ylb.#cca.ca.usa.noam

If a turtle doesn't have a shell, is he homeless or naked?

413. Re: [APRSSIG:26252] Re: New Kantronics Stuff

From: Byron Smith <wa6ylb@theworks.com>
Date: Tue, 14 Jul 1998 11:57:35
To: bruninga@nadn.navy.mil
Cc: aprssig@tapr.org
Message-ID: <3.0.1.16.19980714115735.37d7a84e@theworks.com>
Rendered body type: text/plain

Ah, but not all GPS units can "select" a single output string. My GPSII+ sends aproximatly 10 - 12 lines every .6 of a second or so. It appears like a constant
stream of sequences at 4800 baud (fixed rate). Its so *much* that HSP doesnt work on APRSdos mobile applications. APRSdos gets "lost" reading so many strings,
and it doesnt get them all, so lots of "bad NMEA" messages are shown.
I solved this by getting the second serial port for the laptop. Works FB with two serial ports. HSP cable is now gathering dust... :-(

At 11:42 AM 7/14/98 -0500, you wrote:
>> Byron Smith wrote...Bummer. Its my understanding that only up to 2400 baud
>> is availible on this "GPS" port. Too bad for us 4800 fixed baud rate
>
>Kevin wrote:>
>> command. The GPSPORT command allows you to configure a baud rate of 300,
>> 600, 1200, 2400, or 4800 for the GPS device...
>
>THe probelm is data verbosity. If you can turn off most sentences except
>for RMC or GGA, then you CAN operate at 4800, I think. Just dont let it
>send 12 other sentences at the same time..
>
>
Byron Smith
wa6ylb@theworks.com - Website: theworks.com/~wa6ylb
wa6ylb@wa6ylb.#cca.ca.usa.noam

If a turtle doesn't have a shell, is he homeless or naked?

414. Lost windows

From: Ray Vaughan <rvaughan@gate.net>
Date: Tue, 14 Jul 1998 15:12:39 -0400
To: aprssig@tapr.org
Message-ID: <1.5.4.32.19980714191239.00948b48@pop.gate.net>
Rendered body type: text/plain

On one of my systems running WinAPRS 2.1.7, I seem to have lost some windows (WinNT 4.0). I can see the map without any problem. BUt when I double click on a station, there's a delay as it gets the window ready, but it never shows up.

I can see it listed when I alt-W. But when I switch to it, it's like it's off the screen somewhere that I can't get it. Minimizing or Maximizing APRS didn't make any difference.

Any one else seen this?

Ray, KD4BBM

415. Re: [APRSSIG:26258] Lost windows

From: Mark Sproul <msproul@ap.org>
Date: Tue, 14 Jul 1998 16:01:01 -0400
To: rvaughan@gate.net, aprssig@tapr.org
Message-ID: <v03110700b1d1637140cc@[165.1.27.20]>
Rendered body type: text/plain

At 3:17 PM -0400 7/14/98, Ray Vaughan wrote:
>On one of my systems running WinAPRS 2.1.7, I seem to have lost some windows
>(WinNT 4.0). I can see the map without any problem. BUt when I double
>click on a station, there's a delay as it gets the window ready, but it
>never shows up.
>
>I can see it listed when I alt-W. But when I switch to it, it's like it's
>off the screen somewhere that I can't get it. Minimizing or Maximizing APRS
>didn't make any difference.
>
>Any one else seen this?
>
>Ray, KD4BBM

A few versions ago, at users request, I added the ability to remember where
you keep windows of each different type. This information is stored in a
file called "WinLoc.prf"

Delete this file and restart, your window locations should go back to
default positions

I have added a RESET WINDOW LOCATIONS menu command but I dont know if it is
in the version you have

Mark

_____
(please note email address change msproul@ap.org)
_____
Mark Sproul |Amateur Radio: KB2ICI
Software Engineer @ Assoc Press |
msproul@ap.org |Work: 609-860-7120
North Brunswick, NJ |Fax: 609-860-7129
http://msproul.rutgers.edu/
_____

416. Re: [APRSSIG:26258] Lost windows

From: Jeff Brenton <jeffb@espi.com>
Date: Tue, 14 Jul 1998 15:33:10 -0500
To: aprssig <aprssig@tapr.org>
Message-ID: <35ABC085.248E@espi.com>
Rendered body type: text/plain

Go to the WinAPRS directory, and delete the file WinLoc.prf, then
restart WinAPRS.

Ray Vaughan wrote:
> On one of my systems running WinAPRS 2.1.7, I seem to have lost some
> windows (WinNT 4.0). I can see the map without any problem. BUt
> when I double click on a station, there's a delay as it gets the
> window ready, but it never shows up.
--

Jeff Brenton, Ham radio call KA9VNV
http://www.espi.com
Questionable web page: http://www.dididahdahdidit.com
Covert supporter of the Vast Right Wing Conspiracy (tm)

417. Re: [APRSSIG:26215] Re: Mackinac Island Race

From: Dave Chapman <dchapman@pacbell.net>
Date: Mon, 13 Jul 1998 19:30:40 -0700
To: aprssig@tapr.org
Message-ID: <3.0.5.32.19980713193040.007de440@pacbell.net>
Rendered body type: text/plain

At 11:36 AM 7/13/98 -0500, Jon Ogden wrote:

>>My question is... Does anyone know if there will be any boats running APRS
>>and sailing in the event. Sure would be cool if there was. Since the
course
>>is 333 miles, it will last for a couple of days.
>
>No, not that I know of. I have participated in the race the last two
>years. This year I will not be. If I would have gone, one of my goals
>would have been to have APRS on board the boat.
>......
>I have mentioned APRS to the Commodore of my yacht club and he thought it
>was quite interesting. It would be really cool to show it off.
>

I've often wondered why boats aren't using APRS as yet. Do they have a
packet frequency in that Marine band of theirs?

Dave Chapman
KC6UWP

418. Re: [APRSSIG:26261] Re: Mackinac Island Race

From: Jon Ogden <jono@enteract.com>
Date: Tue, 14 Jul 98 18:48:25 -0500

To: <dchapman@pacbell.net>, <aprssig@tapr.org>
Message-ID: <199807142340.SAA23404@tapr.org>
Rendered body type: text/plain

>>I have mentioned APRS to the Commodore of my yacht club and he thought it
>>was quite interesting. It would be really cool to show it off.
>>
>
>I've often wondered why boats aren't using APRS as yet. Do they have a
>packet frequency in that Marine band of theirs?

Well, most boat owners aren't real saavy when it comes to radios and
electronics. They really are appliance operators. Realistically, most
wouldn't know what packet radio was if their lives depended on it.
That's not a slam on them, it's just the truth. The purpose of the
boating hobby is not to learn about radio and various operating modes.
Anyhow, I don't know if any form of operation other than voice is legal
in the marine band. They definitely don't have a packet frequency and
they really don't have all that many channels either. Let alone have
digipeaters, etc. All marine communication I've seen is strictly
simplex. And the frequencies are quite crowded too. During races, we
always have to listen to the pleasure boaters cruising in addition to the
race committee.

I am sure that if someone marketed a turn-key navigation/tracking system
for marine use, that it would sell and become popular. Perhaps our great
leaders (Bruninga, Sproul, Sproul, Hillebrand and Dimse) will eventually
market our product commercially.

73,

Jon
KE9NA

Jon Ogden
KE9NA

http://www.qsl.net/ke9na

"A life lived in fear is a life half lived."

419. New Email Address

From: David McCarthy <david.kc7ayx@mci2000.com>
Date: Tue, 14 Jul 1998 20:51:31 -0700
To: Rick Aldom <hogfish@mindless.com>, Jane D Allen <wb7fdf2@juno.com>,
        APRS SIG <aprssig@tapr.org>, ARC-COMM <arc-comm@will-flor.com>,
        ARCCOMM Phoenix <arccomm@phx-az.com>, AZEMCOMM <azemcomm@phx-az.com>,
        Aznet-list <aznet-list@phx-az.com>, Bob Barnes <bb@inficad.com>,
        Leonard Beers <kb7frv@primenet.com>,
        Bruce Blomquist <bruceblom@aol.com>, David Borcher <DBorcher@gi.com>,
        Todd Bordeaux <proceng@ibm.net>, Paul Boyce <R50530@email.mot.com>,
        "Brian @ Primenet" <brianmc@primenet.com>,
        "Brian @ work" <sc1966@email.mot.com>,
        "Bruce @ work" <blomquib@lci.com>,
        Bruce Micales <bmicales@facstaff.wisc.edu>,
        Bob Bruninga <wb4apr@amsat.org>, George Cooney <georgie@aztec.asu.edu>,
        Jim Crume <jcrume@msn.com>, "Dad @ MCI" <jj.mccarthy@internetmci.com>,
        "Dad @ work" <jj.mccarthy@iac.honeywell.com>,
        "Dave's Pager" <8882608153@skymail.com>,
        "David @ work" <rxyh90@email.sps.mot.com>,
        Ray Davis <raykd6fhn@earthlink.net>, Glenn Day <n6tfe@ctaz.com>,
        "Don @ home" <ezw1@worldnet.att.net>,
        Homer Dunford <k7gtehwd1@juno.com>, Donna Farley <dlf2450@aol.com>,
        David French <n7fan@hotmail.com>, Assi Friedman <assib@imap1.asu.edu>,
        Hartley Gardner <hartley@goodnet.com>, Ray Gershon <w3gsi@juno.com>,
        James Gerwitz <p06288@email.sps.mot.com>,
        Gila Repeater Group <ares_grg@GILA.NET>,
        Cynthia Gilbert <r29012@email.sps.mot.com>,
        Gary Goetz <k7wzx@juno.com>, Steve Hailey <HaileyS@USA.REDCROSS.ORG>,
        Dave Hall <p02596@email.sps.mot.com>, Lance Halle <lanceh@a.crl.com>,
        Gary Hamman <ghamman@aztec.asu.edu>, Clifford Hauser <kd6xh@arrl.org>,
        Patrick Havens <pahavens@aol.com>,
        "Robert L. Hollister" <N7INK@compuserve.com>,
        Keith Justice <kf7tp@goodnet.com>,
        "Jason D. Kornetsky" <biker@goodnet.com>,
        Betsey Kosier <bjk718@uihcjes2.uihc.uiowa.edu>,
        Warren Leek <WarrenLeek@mail.maricopa.gov>,

Jeff Lewis <kj7tx@worldnet.att.net>, MARCA <marca@willow.sps.mot.com>,
MARCA Exec <marca_exec@willow.sps.mot.com>,
MARCA Tech <marca_tech@willow.sps.mot.com>,
Todd Bordeaux <proceng@ibm.net>, Rick Aldom <hogfish@mindless.com>,
Ron Reynolds <azn7wtf@aztec.asu.edu>,
Walt Schuknecht <wschuk@cyberhighway.net>,
David McCarthy <david.kc7ayx@mci2000.com>,
Kevin Mcgrath <Kevin.Mcgrath@noaa.gov>, Dan McKinney <kb7loj@juno.com>,
Dan McKinney <gcares@futureone.com>,
Daniel Meredith <dmeredith@phx-az.com>, Russ Mohn <russ.mohn@asu.edu>,
Motorola Hams <moto_az_hams@willow.sps.mot.com>,
"Rod O'Conner" <rodoconnor@uswest.net>,
"Joe Oliver, WB7BNI" <73167.133@compuserve.com>,
Phoenix APRS <phxaprs@phx-az.com>,
Phx-az listserv <listserv@phx-az.com>,
Jim Pierce <Jim.Pierce@aexp.com>, Rich Pigott <noble@starlink.com>,
Mike Pulley <Mike_J_Pulley@mail.intel.com>,
Mike J Pulley <Mike_J_Pulley@ccm.intel.com>,
Larry Rasner <lrasner@aol.com>,
Mark Rennebaum <q20091@email.sps.mot.com>,
Ron Reynolds <azn7wtf@aztec.asu.edu>,
Steve Rundquist <srundquist@juno.com>,
Don Scarpitto <p13990q@email.sps.mot.com>,
Walt Schuknecht <wschuk@cyberhighway.net>, Tom Sharp <tsharp@ram.net>,
Steve Sipple <steve.sipple@noaa.gov>, Emil Snyder <kc7sss@juno.com>,
Alex Vrenios <P29131@email.mot.com>, Elbert Watts <emwatts2@aol.com>,
Bud Whitehead <EHW37@aol.com>, Jerry Wyatt <jawyatt@primenet.com>,
Dan Zubey <dzubey@yahoo.com>
Message-ID: <35AC2743.79EBCA0F@mci2000.com>
Rendered body type: text/plain

Please note my new email address. MCI cut their unlimited service to
150 hours/month. Time to move. To avoid problems of changing addresses
in the future I am going to Hotmail.

kc7ayx@hotmail.com

Please send me a reply so I can add you to my address book. Thanks.

73,

David
--
David C. McCarthy - KC7AYX - Disaster Support Services
American Red Cross - Central Arizona Chapter
ARES EC - Skywarn - APRS - Motorola ARC of Arizona
mailto:kc7ayx@hotmail.com - SkyPager: 1-888-260-8153
http://www.angelfire.com/az/kc7ayx/index.html

420. FS: Magellan Meridian XL

From: "Whit Crowley" <wcrowley@magibox.net>
Date: Wed, 15 Jul 1998 00:15:03 -0500
To: <aprssig@tapr.org>
Message-ID: <000701bdafaf$8ea41ee0$4b4a1cce@whitnt1>
Rendered body type: text/plain

Have Magellan Meridian XL with power cable, power/data cable, mounting kit, remote mounting for antenna.
Just purchases a new GPS III, Have been using this Magellan for APRS. If this is wrong place to post
this
type of message, please excuse me. Thanks and 73's   wcrowley@magibox.net

421. Re: [APRSSIG:26251] Kantronics GPS port (KPC3 Plus 8.3)

From: Wes Johnston <kd4rdb@eagnet.com>
Date: Wed, 15 Jul 1998 00:52:55 -0400
To: Byron Smith <wa6ylb@theworks.com>, aprssig@tapr.org
Message-ID: <3.0.32.19980715005254.006e9374@gena>
Rendered body type: text/plain

I wonder if Kantronics would define "taxing the cpu"... does this include
running the TNC in CD SOFT mode? This is the hottest setup yet... not as
expensive as a pico packet, I just hope it works well... I may just have
to run out and get one to see.

At 08:08 PM 7/14/98 -0700, you wrote:
>After seeing that note from a Kantronics tech/software type, I'm sure
>that the 8.3 will work with a GPS unit. the thing that person was doing was
>taxing the
>CPU resources, and I'm sure the CPU missed a beat or two during that all out
>data dumping via the other port.

>Byron Smith

Wes
Email: mailto:kd4rdb@usa.net
APRS: http://www.qsl.net/kd4rdb/aprs.htm
A good traveler has no fixed plans and is not intent on arriving.

422. Re: Mackinac Island Race

From: Mark Fellhauer <sparkfel@primenet.com>
Date: Tue, 14 Jul 1998 23:37:37 -0700
To: jono@enteract.com, aprssig@tapr.org
Message-ID: <3.0.5.32.19980714233737.00801de0@pop.primenet.com>
Rendered body type: text/plain

At 06:41 PM 7/14/98 -0500, Jon Ogden wrote:

>I am sure that if someone marketed a turn-key navigation/tracking system
>for marine use, that it would sell and become popular. Perhaps our great
>leaders (Bruninga, Sproul, Sproul, Hillebrand and Dimse) will eventually
>market our product commercially.
>

Actually, the IMO has plans to implement an APRS-like system in the next
upgrade of DSC. I haven't seen the technical documents yet, as they want
$$ for them. I like it when groups set an "open" engineering standard that
you have to pay to see. NOT!

73,

Mark
KC7BXS

Actually the marina and charter operators I've spoken to are pretty keen on
tracking boats. It would help their business quite a bit. One problem,
the people I've spoken to want to track 400 boats on one lake alone and
they have time-shares and rentals on 27 other lakes... Basically, we've
been told we'd swamp (no pun intended) just about any commercial system out
there.

423. Garmin in an Airplane

From: John W Wilson <z004391b@bc.seflin.org>
Date: Wed, 15 Jul 1998 07:42:11 -0400 (EDT)
To: aprssig@tapr.org
Message-ID: <Pine.3.89.9807150754.A8169-0100000@bc.seflin.org>
Rendered body type: text/plain

I had a chance to take an airplane or two this last week and asked the
airplane crew if I could run it. No problem on a couple of the flights,
above 10,000 feet on one flight. I was able to test my Garmin GPS 3 at
speed and altitude. It worked as it should, and I was very happy. I
tracked us at 560 miles per hour at 34 thousand feet. It has a nice map
in it so I could identify cities, roads and rivers below.

I was concerned about this because my other Garmin, model 75, blanked out
at 100 mph. Disconcerting to say the least. I wanted to test the newer
Garmin but was unwilling to take my car up to 100 mph to test it, hi.

John W. Wilson, KN4HX
z004391b@bcfreenet.seflin.lib.fl.us

424. Re: [APRSSIG:26261] Re: Mackinac Island Race

From: Ray Vaughan <rvaughan@gate.net>
Date: Wed, 15 Jul 1998 11:00:53 -0400
To: dchapman@pacbell.net
Cc: aprssig@tapr.org
Message-ID: <1.5.4.32.19980715150053.00945270@pop.gate.net>
Rendered body type: text/plain

At a recent South Florida FM Assoc. meeting we had a guest speaker from the
Coast Guard. They do have the next generation marine radio in the works
that sort of brings together GPS and ANI.

Check out http://www.uscg.mil/hq/g-m/mov/briefs/ and follow the links to "AIS".

Sounds like a logical step for the next generation. Hit a "Mayday" button

and the whole world know WHO you are and WHERE you are.

Of course, I'm quite sure much of this technology has roots in APRS. Look
at that, amateur radio has gotten back into the new technology development
business!

Ray, KD4BBM

At 04:27 PM 7/14/98 -0500, you wrote:
>At 11:36 AM 7/13/98 -0500, Jon Ogden wrote:
>
>>>My question is... Does anyone know if there will be any boats running APRS
>>>and sailing in the event. Sure would be cool if there was. Since the
>course
>>>is 333 miles, it will last for a couple of days.
>>
>>No, not that I know of. I have participated in the race the last two
>>years. This year I will not be. If I would have gone, one of my goals
>>would have been to have APRS on board the boat.
>>......
>>I have mentioned APRS to the Commodore of my yacht club and he thought it
>>was quite interesting. It would be really cool to show it off.
>>
>
>I've often wondered why boats aren't using APRS as yet. Do they have a
>packet frequency in that Marine band of theirs?
>
>Dave Chapman
>KC6UWP
>
>

425. Re: [APRSSIG:26268] Re: Mackinac Island Race

From: Jon Ogden <jono@enteract.com>
Date: Wed, 15 Jul 98 11:17:03 -0500
To: <rvaughan@gate.net>, <aprssig@tapr.org>
Message-ID: <199807151614.LAA13229@tapr.org>
Rendered body type: text/plain

>Sounds like a logical step for the next generation. Hit a "Mayday" button
>and the whole world know WHO you are and WHERE you are.

This sounds similar to what they are doing in automobiles these days.
You have a GPS rx engine and a cell phone tied together. When you are in
trouble, you hit a button and the GPS transmits position data to a
dispatcher via a wireless 1200 baud modem in the cell phone.
>
>Of course, I'm quite sure much of this technology has roots in APRS.

Sort of, but you don't need to have APRS to do this sort of thing. APRS
adds just one more layer of flexibility/usability on top of all of it.
It certainly enhances things.

>Look at that, amateur radio has gotten back into the new technology
development
>business!

This IS a good thing. That is why I would like to see APRS go commercial
in some way or another. For one, it would allow our heros here to
actually make some real money for all the work they do and secondly, we
could point to something that amateur radio has done to improve society.

Now we just need to continue pioneering in other areas of life and
technology as well.

Digital High Definition ATV anyone? :-)

73,

Jon
KE9NA

Jon Ogden

jono@enteract.com
www.qsl.net/ke9na

"A life lived in fear is a life half lived."

426. European Maps & European City name lists?

From: is@primetime.ch (Ian Stewart, PrimeTime AG)
Date: Wed, 15 Jul 1998 18:51:08 +0200
To: aprssig@tapr.org
Message-ID: <000000186352983366268@primetime.ch>
Rendered body type: text/plain

Hello All,

I am new to APRS and at the moment just interested in the GPS side of it.
Are there any Central European maps available, and is there such a thing as
City name lists?

Regards Ian

I don't do .INI, .BAT, or .SYS files. I don't assign apps to files...
I don't configure peripherals or networks before using them...
I have a computer to do all that...
I Have a Mac

427. APRServe down again

From: Steve Dimse K4HG <k4hg@tapr.org>
Date: Wed, 15 Jul 1998 13:13:10 -0400
To: "aprssig" <aprssig@tapr.org>
Message-ID: <199807151713.MAA15952@tapr.org>
Rendered body type: text/plain

Looks like APRServe went down sometime yesterday during a T-storm, so far
I have been unable to reach anyone in the museum to check it. I will be
unable to get to the site until Monday or Tuesday, so it may be down all
week.

The ilnorth.aprs.net server is working well, and everyone should switch
to that until the Miami machine comes back up...

Steve K4HG

428. DCC in Chicago

From: Steve Dimse K4HG <k4hg@tapr.org>
Date: Wed, 15 Jul 1998 13:14:52 -0400
To: "aprssig" <aprssig@tapr.org>
Message-ID: <199807151714.MAA16048@tapr.org>
Rendered body type: text/plain

A reminder...

No one has offered to speak at the APRS seminar DCC other than the
authors. I do not have time to chase people down. If you don't offer to
speak, it will just be us...

If you have something you want to talk about, please speak up NOW!

Steve K4HG

429. RE: [APRSSIG:26271] APRServe down again

From: "Philip Smith" <pksmith@computerland.net>
Date: Wed, 15 Jul 1998 14:24:21 -0500
To: "APRS SIG" <aprssig@tapr.org>
Message-ID: <000401bdb026$2c72aa80$197d1dce@phil>
Rendered body type: text/plain

Just now connected with Southern Flordia server. Had been trying all day.

Phil WB5QMF

> -----Original Message-----
> From: aprssig@tapr.org [mailto:aprssig@tapr.org]On Behalf Of Steve Dimse
> K4HG
> Sent: Wednesday, July 15, 1998 12:17 PM
> To: aprssig@tapr.org
> Subject: [APRSSIG:26271] APRServe down again
>
>
> Looks like APRServe went down sometime yesterday during a T-storm, so far

> I have been unable to reach anyone in the museum to check it. I will be
> unable to get to the site until Monday or Tuesday, so it may be down all
> week.
>
> The ilnorth.aprs.net server is working well, and everyone should switch
> to that until the Miami machine comes back up...
>
> Steve K4HG
>

430. Miami Back up

From: Steve Dimse K4HG <k4hg@tapr.org>
Date: Wed, 15 Jul 1998 15:32:06 -0400
To: "aprssig" <aprssig@tapr.org>
Message-ID: <199807151932.OAA21086@tapr.org>
Rendered body type: text/plain

Well, once again as soon as I announced that the server was down it came back up.

Still, I am surprised at the number of requests I got in the last hour on how to add ilnorth to the server file (aprsserv.txt). I have posted this info before, but I'll repeat it so that everyone can do this.

These two servers are completely inter-linked, any data on one is available on both. Hopefully soon we will be able to automate the process so the connection remains up automatically when one server dies. Until then, all Mac/WinAPRS users should do follow this procedure to edit their connection file. Don't wait until a server dies, do it now. If you notice the connection is down, then just pick the other server off the list.

Open the aprsserv.txt in a text editor. The first line ought to be the miami server. You should duplicate this line, and edit one copy to be "ilnorth.aprs.net" instead of "www.aprs.net".

The other field is the text that will appear in the TCP connections menu, change it to suit your taste, something like "Alternate APRServe". The number is the port number, use 10151 to get an initial buffer dump, and 23 for no buffer. The "spaces" between the fields are actually single tab characters.

Steve K4HG

431. Porta-Digi in caving

From: William Nolle <wa8inz@airnet.net>
Date: Wed, 15 Jul 1998 16:03:49 -0500
To: APRSsig <aprssig@tapr.org>
Message-ID: <35AD1935.37D8CF19@airnet.net>
Rendered body type: text/plain

I was just tossing around an idea that Bob B had posted some time ago on APRS in caving. Well what would be wrong with using a portable digi (Or several) and place one at every turn as your moving further into the cave and have one just outside the cave that would be able to reach your local network?. I'm not a caver or spelunker myself so cant contribute to much but i'm sure there are many on the sig that are Hi.
--
Bill Nolle wa8inz
wa8inz@airnet.net
wa8inz@amsat.org
Hazel Green, AL

432. Re: [APRSSIG:26270] European Maps & European City name lists?

From: Wes Johnston <kd4rdb@eagnet.com>
Date: Wed, 15 Jul 1998 17:44:29 -0400
To: is@primetime.ch, aprssig@tapr.org
Message-ID: <3.0.32.19980715174423.006f42cc@gena>
Rendered body type: text/plain

I'm assuming you DON"T run DOS aprs.. <hihi>,
ftp://aprs.rutgers.edu/pub/hamradio/APRS/DCW_Maps/Europe/ check this link for maps of europe.. some cities labeled, and main hiways, no city streets.

At 11:37 AM 7/15/98 -0500, you wrote:

>Hello All,
>
>I am new to APRS and at the moment just interested in the GPS side of it.
>Are there any Central European maps available, and is there such a thing as
>City name lists?
>
>Regards Ian
>
>--
>
>I don't do .INI, .BAT, or .SYS files. I don't assign apps to files...
>I don't configure peripherals or networks before using them...
>I have a computer to do all that...
>I Have a Mac
>
Wes
Email: mailto:kd4rdb@usa.net
APRS: http://www.qsl.net/kd4rdb/aprs.htm
A good traveler has no fixed plans and is not intent on arriving.

433. Magellan 2000 and 2000XL

From: kd4ydc@juno.com (Robert W Burton)
Date: Wed, 15 Jul 1998 18:29:42 -0400
To: aprssig@tapr.org
Message-ID: <19980715.182948.4782.0.KD4YDC@juno.com>
Rendered body type: text/plain

Ok,
Please don't laugh too loud ! (ok...i hear you !!)
Can a Mag. 2000 or 2000XL be mod. to work w/ APRS??
Robert
KD4YDC

_____
You don't need to buy Internet access to use free Internet e-mail.
Get completely free e-mail from Juno at http://www.juno.com
Or call Juno at (800) 654-JUNO [654-5866]

434. Re: Porta-Digi in caving

From: "Paul Christenson" <n3eop@hotmail.com>
Date: Wed, 15 Jul 1998 16:11:27 PDT
To: aprssig@tapr.org
Message-ID: <19980715231128.12451.qmail@hotmail.com>
Rendered body type: text/plain

>Well what would be wrong with using a portable digi (Or several) and
>place one at every turn as your moving further into the cave and have
>one just outside the cave that would be able to reach your local
>network?

Cost aside, nothing.

You would have to manually enter positions, since GPS doesn't work
underground.

_____
Get Your Private, Free Email at http://www.hotmail.com

435. Re: [APRSSIG:26278] Re: Porta-Digi in caving

From: "O.C. Winton wn1z" <wn1z@sojourner.wn1z.ampr.org>
Date: Wed, 15 Jul 1998 18:40:11 -0700
To: aprssig@tapr.org
Message-ID: <6594@babylon.wn1z.ampr.org>
Rendered body type: text/plain

Cost, and theft risk. That's a lot of $$ to leave strung
out uncamouflaged behind you.

Orrin wn1z
Monterey CA

At 06:12 PM 7/15/98 -0500, Paul Christenson wrote:
>>Well what would be wrong with using a portable digi (Or several) and
>>place one at every turn as your moving further into the cave and have
>>one just outside the cave that would be able to reach your local
>>network?
>

>Cost aside, nothing.
>
>You would have to manually enter positions, since GPS doesn't work
>underground.
>
>_____
>Get Your Private, Free Email at http://www.hotmail.com
>

436. tripmate and data output

From: Wes Johnston <kd4rdb@eagnet.com>
Date: Wed, 15 Jul 1998 22:33:57 -0400
To: aprssig@tapr.org
Message-ID: <3.0.32.19980715223356.006c3ce4@gena>
Rendered body type: text/plain

is it possible to selectivly turn on or off the different sentences from
the Tripmate? For example, if I only wanted to have it send GPRMC, could I
do that? Does it reset when power is lost?

THanks!
Wes
Email: mailto:kd4rdb@usa.net
APRS: http://www.qsl.net/kd4rdb/aprs.htm
A good traveler has no fixed plans and is not intent on arriving.

437. Re: [APRSSIG:26278] Re: Porta-Digi in caving

From: Bob Bruninga <bruninga@nadn.navy.mil>
Date: Wed, 15 Jul 1998 22:43:27 -0400 (EDT)
To: Paul Christenson <n3eop@hotmail.com>
Cc: aprssig@tapr.org
Message-ID: <Pine.SOL.3.96.980715223107.8405B-100000@arctic>
Rendered body type: text/plain

On Wed, Paul Christenson wrote about portable APRS digis in caves:

> You'd have to manually enter positions, since GPS doesn't work [there].

I actually did this. I drew an APRS map of my favorite childhood cave
back in Alabama. And since there is no GPS that will ever prove you
wrong, you can just sketch the inside of the cave to what everyone
generally believes is the approximate tunnels and interconnections. THen
as long as everyone is using the same map, it is perfect. Since people
refer all positions to their same general common kowledge.

Actually in my hometown in North Alabama, there is a 3 inch thick three
ring binder of EXACT maps of all 50 locally known caves. Those guys down
there survey them to the foot or less! I was impressed! There is one
near Bill that takes 3 hours to get a few miles inside and then there is a
straight down 700 foot deep chamber. It takes a party of something like a
dozen people just to carry the rope to get down... (good news is you get
out another way without having to climb back up...)

It wont be long before we may have APRS in an HT that would be easy to
carry with you...! :-)

438. APRS Forum at Tuthill Hamfest

From: "David McCarthy" <kc7ayx@hotmail.com>
Date: Wed, 15 Jul 1998 19:50:37 PDT
To: Archer5151@aol.com, aprssig@tapr.org, arccomm@phx-az.com,
        azemcomm@phx-az.com, n6tfe@ctaz.com, assib@imap1.asu.edu,
        gcares@futureone.com, moto_az_hams@willow.sps.mot.com,
        phxaprs@phx-az.com, n7izm@amsat.org, Steve.Sipple@noaa.gov
Message-ID: <19980716025039.26114.qmail@hotmail.com>
Rendered body type: text/plain

Pass it on. Come join us for the...

Automatic Packet/Position Reporting System Forum

Saturday, July 25th - 9:00-10:00 AM
Building 17, Fort Tuthill Fairgrounds

Sponsor: Motorola Amateur Radio Club of Arizona

Facilitator: David C. McCarthy, KC7AYX, Public Service Coordinator

This one-hour session will cover the basics and how-tos of APRS. It
will include demonstrations of its application for Public Service in

Arizona. The future vision of APRS in Arizona will also be discussed.

APRS turns packet radio into a real-time tactical communications and
display system for emergencies and public service applications. It does
this by adding maps and other data displays, and by doing all
communications using a broadcast protocol so that everyone is updated in
real time. The greatest benefit of APRS is the ability to track key
assets real-time at any special event or for emergency response.

APRS provides universal connectivity to all stations but avoids the
complexity and limitations of a connected network. It permits any
number of stations to exchange data just like voice users would on a
voice net. Any station that has information to contribute simply sends
it, and all stations receive it and log it. All the benefits of regular
packet with the added visual display and quick easy communication
between multiple stations.

David C. McCarthy - KC7AYX - Disaster Services
American Red Cross - Central Arizona Chapter
ARES EC - Skywarn - APRS - Motorola ARC of Arizona
mailto:kc7ayx@hotmail.com - SkyPager: 1-888-260-8153
http://www.angelfire.com/az/kc7ayx/index.html

_____
Get Your Private, Free Email at http://www.hotmail.com

439. Re: Porta-Digi in caving

From: Dave.Ackrill@NOTESMAIL.powergen.co.uk
Date: 16 Jul 1998 08:55:08 +0000
To: aprssig@tapr.org
Message-ID: <980716085508Z*/G=Dave/S=Ackrill/O=NOTESMAIL/PRMD=POWERGEN/ADMD=CWMAIL/C=GB/@MHS>
Rendered body type: text/plain

Depends on what frequency you are going to use the system.

Experiments by CREG (the Cave Radio and Electronics Group) in the UK
using CB radios, VHF/UHF Amateur Handhelds and Low Frequency (LF) sets
showed that that range on CB/VHF/UHF was quite short and absorption by
the rock, especially any with metals in, was severe. Just going
around a corner could be enough to loose communication.

LF is more promising, hundreds of meters is possible using magnetic
transmission techniques. That is, multiturn loops of wire, in a
transformer type effect, rather than traditional RF transmissions.
Locating stations whilst they are underground is already done, using
DF techniques and it is also possible to calculate how deep the
transmitter is underground by using trigonometry.

However, bandwidth and baud rates are a problem. If you try to
transmit too fast, the data is lost and the allocations are quite
narrow at the caving frequency and the new Amateur LF bands of 73kHz
and 136kHz.

One of the things I put into my application for a special 73kHz permit
was to try to explore the use of data transmissions, and underground
transmissions, but my divorce last year rather curtailed my plans!

I'd be interested to hear of anyone else who is interested in
experimenting.

Cheers de Dave (G0DJA)

440. Re: GPS Test

From: John W Wilson <z004391b@bc.seflin.org>
Date: Thu, 16 Jul 1998 07:51:49 -0400 (EDT)
To: Brian Coon <ab2ba@zeus.odyssey.net>
Cc: aprssig@tapr.org
Message-ID: <Pine.3.89.9807160702.A22706-0100000@bc.seflin.org>
Rendered body type: text/plain

I just sat it on my arm where the window was and after a while it got
lock. Took about 5 minutes each time because of the distance traveled
since the last time I turned it on. It has an 'autolocate' feature which
shuffles satellites in view around and in short time finds itself.

John W. Wilson, KN4HX

z004391b@bcfreenet.seflin.lib.fl.us

On Wed, 15 Jul 1998, Brian Coon wrote:

> Nice test.
> Can u tell me how u positioned the GPS. Was it in a side window, the cockpit? What type of plane was
 it?
> I have tried getting a fix out the side window of a commercial plane with no luck.
>
> 73 Brian Coon
> ab2ba@odyssey.net
>
>

441. Re: [APRSSIG:26267] Garmin in an Airplane

From: John W Wilson <z004391b@bc.seflin.org>
Date: Thu, 16 Jul 1998 07:53:29 -0400 (EDT)
To: David Dobbins <dobbins@localaccess.com>
Cc: aprssig@tapr.org
Message-ID: <Pine.3.89.9807160715.B22706-0100000@bc.seflin.org>
Rendered body type: text/plain

I would have loved to run a tracker but they would have tossed me out the
door at 34 thousand. Quite against the rules to run a radio, never mind
a transmitter. Hi. Although, the GPS is really a radio, isn't it?

John W. Wilson, KN4HX
z004391b@bcfreenet.seflin.lib.fl.us

On Wed, 15 Jul 1998, David Dobbins wrote:

> Excellent posting John. I'd wondered if my garmin III was like the old 45
> that quit after 100mph. What a great tool to keep track of where you are.
> How'd you like to run a little tracker with the jet symbol on 144.39. I bet
> you'd get great coverage. Dave.
>
> John W Wilson wrote:
>
> > I had a chance to take an airplane or two this last week and asked the
> > airplane crew if I could run it. No problem on a couple of the flights,
> > above 10,000 feet on one flight. I was able to test my Garmin GPS 3 at
> > speed and altitude. It worked as it should, and I was very happy. I
> > tracked us at 560 miles per hour at 34 thousand feet. It has a nice map
> > in it so I could identify cities, roads and rivers below.
> >
> > I was concerned about this because my other Garmin, model 75, blanked out
> > at 100 mph. Disconcerting to say the least. I wanted to test the newer
> > Garmin but was unwilling to take my car up to 100 mph to test it, hi.
> >
> > John W. Wilson, KN4HX
> > z004391b@bcfreenet.seflin.lib.fl.us
>
>
>

442. Re: [APRSSIG:26284] Re: GPS Test

From: Wally Foster <wfoster@hsc.usc.edu>
Date: Thu, 16 Jul 1998 06:44:02 -0700
To: z004391b@bc.seflin.org
Cc: aprssig@tapr.org
Message-ID: <35AE03A1.A4E02C7@hsc.usc.edu>
Rendered body type: text/plain

When I ran my GPS II+ on a commercial flight, I wedged the external
amplified antenna between the window and the window shade.. Worked great
at 350 KPH and 37,000 ft..
Wally N6CDJ

443. Re: [APRSSIG:26285] Re: Garmin in an Airplane

From: Jon Ogden <jono@enteract.com>
Date: Thu, 16 Jul 98 08:54:58 -0500
To: <z004391b@bc.seflin.org>, <aprssig@tapr.org>
Message-ID: <199807161352.IAA23915@tapr.org>
Rendered body type: text/plain

>I would have loved to run a tracker but they would have tossed me out the
>door at 34 thousand. Quite against the rules to run a radio, never mind
>a transmitter. Hi. Although, the GPS is really a radio, isn't it?

Yes it is a radio.

Anyhow, on American Airlines the rules actually forbid an FM or AM
broadcast radio or cell phones. It specifically states that "scanners
must be kept off until an altitude of 10,000 feet is reached." or
something to that effect. So VHF/UHF scanners are allowed.

I've used my GPS on several flights with no problems and no one has said
a thing. It's just difficult to hold it up against the window so that
you have a good lock. But it is really cool to watch.

73,

Jon
KE9NA

Jon Ogden

jono@enteract.com
www.qsl.net/ke9na

"A life lived in fear is a life half lived."

444. KB4JHU and APRS

From: Bob Bruninga <bruninga@nadn.navy.mil>
Date: Thu, 16 Jul 1998 10:36:55 -0400 (EDT)
To: aprssig@tapr.org
Message-ID: <Pine.SOL.3.96.980716103534.27676M-100000@arctic>
Rendered body type: text/plain

I have his APRS V# post card which got returned as insufficient address.
He lives in Montgomery ALA. Is he here or anyone close that can pass
along his V# to him?

bob

445. Dinner w/ Greg in KS ;-)

From: "Greg Jones, WD5IVD" <wd5ivd@tapr.org>
Date: Thu, 16 Jul 1998 09:43:23 -0600
To: "APRS SIG list   mailing"<aprssig@tapr.org>,
        "NETSIG list   mailing"<netsig@tapr.org>, " tacgps "<tacgps@tapr.org>
Message-ID: <v04011701b1d3cf2a58a5@[169.203.249.107]>
Rendered body type: text/plain

A time and date has been set.

This weekend it will be. Sunday, 18 July, 5:30 pm at Free State Brewery,
downtown Lawrence, KS (in that town with the "other" Kansas University as
Lloyd Verhage stated).

Sunday is my only free night while teaching.

If you are coming, be sure to rsvp with lloyd (verhage@humec.ksu.edu)

Cheers - Greg, WD5IVD

Greg Jones, WD5IVD   Austin, Texas
wd5ivd@tapr.org   http://www.tapr.org/~wd5ivd

446. APRSnew QRT

From: Bob Bruninga <bruninga@nadn.navy.mil>
Date: Thu, 16 Jul 1998 10:49:00 -0400 (EDT)
To: aprssig@tapr.org
Message-ID: <Pine.SOL.3.96.980716104446.27676N-100000@arctic>
Rendered body type: text/plain

Thanks for testing the new protocols with my APRSnew.

Please to not use it anymore. Thanks.

It showed us what new formats are and are-not fully implemented in
all versions. As soon as all versions are brought up to the same
capabilities, then we will implement the few tweaks that are

needed, as needed.

WB4APR, Bob

447. Tethered Balloon for Stealth Digi

From: rholbert@juno.com
Date: Thu, 16 Jul 1998 10:52:43 -0400
To: aprssig@tapr.org
Message-ID: <19980716.105245.17102.0.rholbert@juno.com>
Rendered body type: text/plain

Has anyone else considered using a tethered balloon to put up an
emergency digi? I know wind is an obvious design constraint, but it
should work during calm weather. My vision is to turn the stealth digi
upside down to allow a twin lead 5/8 wave antenna to dangle from the
bottom. Using lithium batteries, hand rolled stiffening capacitors,
fiberglass, and other weight cutting measures should also be considered.

_____
You don't need to buy Internet access to use free Internet e-mail.
Get completely free e-mail from Juno at http://www.juno.com
Or call Juno at (800) 654-JUNO [654-5866]

448. Answering my own question

From: "Schwartz, Dave G" <dschwart@exchange.Waterloo.NCR.com>
Date: Thu, 16 Jul 1998 10:53:16 -0400
To: "'aprssig@tapr.org'" <aprssig@tapr.org>
Message-ID: <76EFB5E1D14BD111AA180000C0FE0300D8B6E1@53svr17.waterloo.ncr.com>
Rendered body type: text/plain

A few days ago I asked if it was possible to turn off the output of selected
NMEA sentences (specifically on the Garmin II+) to reduce the processor load
on the forthcoming KPC3+ second serial port. I got the definitive answer
from Garmin - no (this capability only exists in their sensor board
products). So, don't throw away your HSP cables yet!

449. Trip: Ft Lauderdale to West NC

From: John W Wilson <z004391b@bc.seflin.org>
Date: Thu, 16 Jul 1998 11:59:13 -0400 (EDT)
To: aprssig@tapr.org
Message-ID: <Pine.3.89.9807161138.E17087-0100000@bc.seflin.org>
Rendered body type: text/plain

I will be running a tracker on HF and VHF from Fort Lauderdale Florida to
Fontana Village in Western North Carolina. I may run the laptop DOSAPRS
as well, but I expect to run my SA5 program more often. Look forward to
the reports, leaving Friday 6 AM, July 17, back July 24. 73

John W. Wilson, KN4HX
z004391b@bcfreenet.seflin.lib.fl.us

450. Re: [APRSSIG:26291] Tethered Balloon for Stealth Digi

From: William Nolle <wa8inz@airnet.net>
Date: Thu, 16 Jul 1998 13:55:49 -0500
To: APRSsig <aprssig@tapr.org>
Message-ID: <35AE4CB5.6C53A06C@airnet.net>
Rendered body type: text/plain

Fiberglas is not necessarily any lighter then using pvc pipe (The sewer
type, not shedule 40). And yes I did consider doing that exact same thing
but it would still take a good size balloon. The way it stands my Porta-Digi
is right around 8.5 lbs but I would say this can be cut down. By the way if
you realy want light and strong material use carbon fiber ;-)

rholbert@juno.com wrote:

> Has anyone else considered using a tethered balloon to put up an
> emergency digi? I know wind is an obvious design constraint, but it
> should work during calm weather. My vision is to turn the stealth digi
> upside down to allow a twin lead 5/8 wave antenna to dangle from the
> bottom. Using lithium batteries, hand rolled stiffening capacitors,
> fiberglass, and other weight cutting measures should also be considered.
>
> _____
> You don't need to buy Internet access to use free Internet e-mail.
> Get completely free e-mail from Juno at http://www.juno.com
> Or call Juno at (800) 654-JUNO [654-5866]

--
Bill Nolle wa8inz
wa8inz@airnet.net
wa8inz@amsat.org
Hazel Green, AL

451. Re: New Kantronics Stuff

From: wo4u@juno.com
Date: Thu, 16 Jul 1998 16:29:42 -0400
To: bruninga@nadn.navy.mil, aprssig@tapr.org
Message-ID: <19980716.164940.9150.6.wo4u@juno.com>
Rendered body type: text/plain

Bob wrote:

THe probelm is data verbosity. If you can turn off most sentences except
for RMC or GGA, then you CAN operate at 4800, I think. Just dont let it
send 12 other sentences at the same time..

>>

And then there is the Garmin GPS III where you cannot select the
sentences. It just keeps pumping them all out (much to my TOTAL
disappointment) ...

I talked to a Garmin Engineer about this and he basically said "we leave
string selection up to the Software authors and do not plan to change the
GPS III"

Live and learn ...

How are you coming on the COMM BUFFER OVERFLOW issue??

Paul - WO4U

_____
You don't need to buy Internet access to use free Internet e-mail.
Get completely free e-mail from Juno at http://www.juno.com
Or call Juno at (800) 654-JUNO [654-5866]

452. Data Interface Device (fixed subject)

From: "David VanHorn" <dvanhorn@cedar.net>
Date: Thu, 16 Jul 1998 16:10:25 -0500
To: <dvanhorn@cedar.net>, <aprssig@tapr.org>
Message-ID: <014b01bdb0fe$281098c0$49f135ce@xenu>
Rendered body type: text/plain

So: As it sits in brane and breadboard, here's the device.

One "master" port to communicate to the PC, 115200 or as fast as possible

Four ports to start with, more can be added, (mechanism unclear, ask again
later)
Max of 8 ports.

Each port has ground, TXD, RXD, and two handshake lines, plus an optional
line
that can carry nothing, +12V (cleaned up) or the output of a settable
regulator.
The reg can be set to 5V or 7V (more options are cheap, but nobody's
mentioned
needing more) The reg max output will be around 1A.

Each port can be configured for hardware, Xon/Xoff, or no handshake.
Each port can be configured for baud rate.
Each port has a small bi-directional buffer.

Each connected device will "see" a transparent link to APRS. Nothing added,
nothing changed.

APRS will have to meet me in the middle somewhere with a communication
format that isn't too hard to work with.

Hopefully, there will be no lost data. If the connected devices don't honor
any handshaking, then there might be problems, a lot will depend on how
faast the link between me and APRS is able to run. Obviously it's a finite

bandwidth, and you can only stuff so much down a given pipe before
something spills.

Total cost, don't know yet, a lot depends on packaging, but certainly less
than anything else that lets you get 8 com ports on one int!

453. Re: [APRSSIG:26291] Tethered Balloon for Stealth Digi

From: RWeinkauf@aol.com
Date: Thu, 16 Jul 1998 17:20:16 EDT
To: aprssig@tapr.org
Message-ID: <cc021928.35ae6e91@aol.com>
Rendered body type: text/plain

I have toyed with this idea too. But I would leave all the "stuff" (TNC,
cables, radio) on the ground, and send aloft just a dual band hand held. Let
the ground unit transmit on a 440 frequency which is being monitored by the
dual band balloon unit in cross band repeat mode.

Of course ID requirements must be met, but for the "stealth" feature this is a
simple setup to send aloft.

454. WinAPRS and Precision Mapping

From: Earl Needham <kd5xb@amsat.org>
Date: Thu, 16 Jul 1998 15:22:07 -0600
To: aprssig@tapr.org
Message-ID: <3.0.3.32.19980716152207.008659d0@mail.pdrpip.com>
Rendered body type: text/plain

Is it necessary to fully install the Precision Mapping software in order
to get the maps in WinAPRS, or is it enough to simply have the map
directories somewhere on the machine?

        7 3
        Earl

Earl Needham, KD5XB   mailto:KD5XB@AMSAT.ORG
Clovis, New Mexico   DM84 N34.403 W103.334
Registered: APRS/DOS & WinAPRS

455. Re: [APRSSIG:26292] Answering my own question

From: "Brent Hildebrand" <bhildebrand@earthlink.net>
Date: Thu, 16 Jul 1998 15:00:51 -0700
To: <dschwart@exchange.Waterloo.NCR.com>, <aprssig@tapr.org>
Message-ID: <005501bdb105$afe03060$d01afea9@dell>
Rendered body type: text/plain

While the II+ can not change baud rates, the 12XL can be slowed to 2400
baud. The Garmin 35 can be programmed to a number of different baud rates,
and individual sentences turned on and off. I've seen the 35 advertised for
$190.00.
..
FYI   BH, KH2Z

-----Original Message-----
From: Schwartz, Dave G <dschwart@exchange.Waterloo.NCR.com>
To: aprssig@tapr.org <aprssig@tapr.org>
Date: Thursday, July 16, 1998 8:14 AM
Subject: [APRSSIG:26292] Answering my own question

>A few days ago I asked if it was possible to turn off the output of
selected
>NMEA sentences (specifically on the Garmin II+) to reduce the processor
load
>on the forthcoming KPC3+ second serial port. I got the definitive answer
>from Garmin - no (this capability only exists in their sensor board
>products). So, don't throw away your HSP cables yet!
>
>

456. Re: [APRSSIG:26298] WinAPRS and Precision Mapping

From: John W Wilson <z004391b@bc.seflin.org>
Date: Thu, 16 Jul 1998 18:28:38 -0400 (EDT)
To: Earl Needham <kd5xb@amsat.org>
Cc: aprssig@tapr.org

Message-ID: <Pine.3.89.9807161827.B18914-0100000@bc.seflin.org>
Rendered body type: text/plain

I have had a problem with PM and WinAPRS myself. I don't see a way to
integrate the mapping software. I thought it was just me, hi.

John W. Wilson, KN4HX
z004391b@bcfreenet.seflin.lib.fl.us

On Thu, 16 Jul 1998, Earl Needham wrote:

>
>   Is it necessary to fully install the Precision Mapping software in order
> to get the maps in WinAPRS, or is it enough to simply have the map
> directories somewhere on the machine?
>
>   7 3
>   Earl
>
>
> Earl Needham, KD5XB   mailto:KD5XB@AMSAT.ORG
> Clovis, New Mexico   DM84 N34.403 W103.334
> Registered: APRS/DOS & WinAPRS
>

457. Re: Dinner w/ Greg in KS ;-)

From: "Greg Jones, WD5IVD" <wd5ivd@tapr.org>
Date: Thu, 16 Jul 1998 18:59:38 -0600
To: netsig@tapr.org
Cc: "APRS SIG list   mailing"<aprssig@tapr.org>, " tacgps "<tacgps@tapr.org>
Message-ID: <v04011706b1d452294e0d@[169.203.249.107]>
Rendered body type: text/plain

Hi Sid.

I took the date from someone else without looking. It is Sunday, not
matter what date got listed.

Greg

>
>Well .... is it Sunday (the 19th) or Saturday (the 18th)???   :-)
>
>Sid Ashen-Brenner   Salina, Ks.   Monitor Service Co.
>Internet : sashen@midusa.net
>AX-25 : n0obm @ n0obm.#ncks.ks.usa.noam

Greg Jones, WD5IVD   Austin, Texas
wd5ivd@tapr.org   http://www.tapr.org/~wd5ivd

458. Test Message

From: Marc Theriault <marc.t@sympatico.ca>
Date: Thu, 16 Jul 1998 21:20:50 -0400
To: aprssig@tapr.org
Message-ID: <35AEA6F2.5B6A@sympatico.ca>
Rendered body type: text/plain

Test Message

459. RE: [APRSSIG:26300] Re: WinAPRS and Precision Mapping

From: "Jerry Rector" <jerryr@gate.net>
Date: Thu, 16 Jul 1998 21:27:07 -0400
To: <z004391b@bc.seflin.org>
Cc: <aprssig@tapr.org>
Message-ID: <199807170126.VAA31816@onondaga.gate.net>
Rendered body type: text/plain

What type of problems are you having...WinAPRS and PM work great here!
Jerry, KB4OAM

-----Original Message-----
From: aprssig@tapr.org [mailto:aprssig@tapr.org]On Behalf Of John W
Wilson
Sent: Thursday, July 16, 1998 06:30 PM
To: aprssig@tapr.org
Subject: [APRSSIG:26300] Re: WinAPRS and Precision Mapping

I have had a problem with PM and WinAPRS myself. I don't see a way to
integrate the mapping software. I thought it was just me, hi.

John W. Wilson, KN4HX
z004391b@bcfreenet.seflin.lib.fl.us

460. Re: [APRSSIG:26210] Troubleshooting U2k

From: wo4u@juno.com
Date: Thu, 16 Jul 1998 22:12:27 -0400
To: n2zrc@webspan.net, aprssig@tapr.org
Message-ID: <19980716.221255.17126.3.wo4u@juno.com>
Rendered body type: text/plain

Arte Booten wrote:
>I called Peet Bro's some months ago, suspecting the control box,
>and they suggested some test procedures, but I didn't have a pen or pa-
>per handy at the time. Anybody have any ideas on how to figure out what
>is wrong.

<<<<<<<<<<<<<<<<<<<<<<<<<<<<<<<<<<<<<<<<<<<<<<<<

I'd call Peet Bros. again and ask for Jim (a fellow HAM). He is really
helpful and knows the equipment very well. Use their 800 # and have a
paper and pencil ready this time. I would guess it is in the Junction
Box or the cable between the junction and the Display Panel. Just does
not seem likely that all the exterior components have gone bad at the
same time.

A couple of months ago I had some wacko readings on mine (same equipment)
and I ended up having to do a reset. Remove external and internal power
and let it drain down to zippo (about a minute should be enough) reset
and presto ... everything was OK again.

_____
You don't need to buy Internet access to use free Internet e-mail.
Get completely free e-mail from Juno at http://www.juno.com
Or call Juno at (800) 654-JUNO [654-5866]

461. test

From: brookesa@compsys.com
Date: Thu, 16 Jul 1998 22:19:14 -0400
To: aprssig@tapr.org
Message-ID: <85256644.000C9CE4.00@smtpg.compsys.com>
Rendered body type: text/plain

test

462. test

From: mathieu <mathieu.kralj@sympatico.ca>
Date: Thu, 16 Jul 1998 22:21:10 -0400
To: aprssig@tapr.org
Message-ID: <35AEB516.A70@sympatico.ca>
Rendered body type: text/plain

test

463. test

From: AB <abrookes@sympatico.ca>
Date: Thu, 16 Jul 1998 22:28:21 -0400
To: aprssig@tapr.org
Message-ID: <35AEB6C5.6617@sympatico.ca>
Rendered body type: text/plain

test
--

464. To MIM or not to MIM

From: AB <abrookes@sympatico.ca>
Date: Thu, 16 Jul 1998 22:43:14 -0400
To: aprssig@tapr.org
Message-ID: <35AEBA42.5761@sympatico.ca>
Rendered body type: text/plain

Greetings,

Anyone using a MIM module from Clement? And if so, with a Garmin
receiver?

Just curious about comments. I only want to send position
from a vehicle and view it from the various internet
sites via landline, and I thought the MIM was an interesting
alternative to tying up a KPC or similar as I only want the
transmit ability.

73, Adrian
--

465. Re: [APRSSIG:26300] Re: WinAPRS and Precision Mapping

From: Boyd Prestwood <w2hob@uscom.com>
Date: Thu, 16 Jul 1998 23:01:11 -0400
To: aprssig@tapr.org
Message-ID: <3.0.1.32.19980716230111.006a8630@mail.uscom.com>
Rendered body type: text/plain

At 05:30 PM 7/16/98 -0500, you wrote:
>I have had a problem with PM and WinAPRS myself. I don't see a way to
>integrate the mapping software. I thought it was just me, hi.
>
>
>John W. Wilson, KN4HX
>z004391b@bcfreenet.seflin.lib.fl.us
>
>
>On Thu, 16 Jul 1998, Earl Needham wrote:
>
>>
>>   Is it necessary to fully install the Precision Mapping software in order
>> to get the maps in WinAPRS, or is it enough to simply have the map
>> directories somewhere on the machine?
>>
>>   7 3
>>   Earl
>>
>>
>> Earl Needham, KD5XB   mailto:KD5XB@AMSAT.ORG
>> Clovis, New Mexico   DM84 N34.403 W103.334
>> Registered: APRS/DOS & WinAPRS

W2HOB RESPONSE: Start WinAPRS like you always have. Slip in the PM CD and
click on the top menu bar WINDOWS and then click on NEW MAP PREC MAPPING.
You'll get the USA but you can manipulate it as with any other WinAPRS map.

You need NOT install the PM CD-ROM. Just slip it in and let WinAPRS use the
disc.

Have fun es 73 de Boyd W2HOB

466. APRS, Fugitives, and trip to NC by KN4HX

From: Ralph Fowler <rwf@BSRG.org>
Date: Thu, 16 Jul 1998 18:53:48 -0400
To: aprssig@tapr.org
Message-ID: <Version.32.19980716184639.011db770@mail.mindspring.com>
Rendered body type: text/plain

Don't forget to switch to 145.79 when you hit GA and in NC!
The N4NEQ-3 digi in Andrews NC at 5500 ft should see you in Fontana, as you
will be right under it. RELAY, WIDE should make you be seen in 4-5 states.

Too bad Eric Robert Rudolph doesn't have a tracker- he'd be in full view of
the digi which is right in the middle of his hideout area.

Ralph
rwf@bsrg.org

At 10:58 AM 7/16/98 -0500, you wrote:
>I will be running a tracker on HF and VHF from Fort Lauderdale Florida to
>Fontana Village in Western North Carolina.

467. Re: [APRSSIG:26295] Re: New Kantronics Stuff

From: Byron Smith <wa6ylb@theworks.com>
Date: Thu, 16 Jul 1998 20:57:07 -0700
To: wo4u@juno.com
Cc: aprssig@tapr.org
Message-ID: <199807170404.VAA11690@ns.theworks.com>
Rendered body type: text/plain

This is true on the GPSII+ too. Its these intense data outputs that confuse aprsdos in HSP mode.

---Snip----

>And then there is the Garmin GPS III where you cannot select the
>sentences. It just keeps pumping them all out (much to my TOTAL
>disappointment) ...
>
>I talked to a Garmin Engineer about this and he basically said "we leave
>string selection up to the Software authors and do not plan to change the
>GPS III"

Byron Smith
wa6ylb@theworks.com - Webpage: http://www.theworks.com/~wa6ylb
wa6ylb@wa6ylb.#cca.ca.usa.noam

A truely wise man never plays leap frog with a unicorn.

468. Re: [APRSSIG:26308] To MIM or not to MIM

From: k9opo@netusa1.net (Roger Grady)
Date: Thu, 16 Jul 1998 23:23:46 -0400 (EDT)
To: aprssig@tapr.org
Message-ID: <199807170323.XAA20104@gatem02.netusa1.net>
Rendered body type: text/plain

>Greetings,
>
>Anyone using a MIM module from Clement? And if so, with a Garmin
>receiver?

Yes.
Yes, GPS-II+. Works just great as a tracker, with an Alince DJ-190 and a Radio Shack (clearance) 30w amp. Now if I could just get it all packaged up neatly and not strewn all over the floor of the van...

Roger Grady K9OPO

469. TIME CHANGE: APRS Forum at Tuthill Hamfest

From: "David McCarthy" <kc7ayx@hotmail.com>
Date: Thu, 16 Jul 1998 21:47:35 PDT
To: Archer5151@aol.com, wb7fdf2@juno.com, aprssig@tapr.org, arccomm@phx-az.com,
        azemcomm@phx-az.com, rxyh90@email.sps.mot.com, n6tfe@ctaz.com,
        sparkfel@primenet.com, assib@imap1.asu.edu, gcares@futureone.com,
        moto_az_hams@willow.sps.mot.com, phxaprs@phx-az.com,
        p13990q@email.sps.mot.com, n7izm@amsat.org, Steve.Sipple@noaa.gov
Message-ID: <19980717044736.19548.qmail@hotmail.com>
Rendered body type: text/plain

Please note the time and location change. We will meet an hour earlier.
This will put the APRS meeting just before the Packet Coordination
meeting. Great lead in! Pass it on. See ya there.

David

Automatic Packet/Position Reporting System Forum

Saturday, July 25th - 8:00-9:00 AM
Building 10, Fort Tuthill Fairgrounds

Sponsor: Motorola Amateur Radio Club of Arizona

Facilitator: David C. McCarthy, KC7AYX, Public Service Coordinator

This one-hour session will cover the basics and how-tos of APRS. It
will include demonstrations of its application for Public Service in
Arizona. The future vision of APRS in Arizona will also be discussed.

APRS turns packet radio into a real-time tactical communications and
display system for emergencies and public service applications. It does

this by adding maps and other data displays, and by doing all
communications using a distribution protocol so that all stations are
updated in real time. The greatest benefit of APRS is the ability to
track key assets real-time at any special event or for emergency
response.

APRS provides universal connectivity to all stations but avoids the
complexity and limitations of a connected network. It permits any
number of stations to exchange data just like voice users would on a
voice net. Any station that has information to contribute simply sends
it, and all stations receive it and log it. All the benefits of regular
packet with the added visual display and quick easy communication
between multiple stations.

//
David C. McCarthy - KC7AYX - Red Cross Disaster Services
ARES EC - Skywarn - APRS - Motorola ARC of Arizona
mailto:kc7ayx@hotmail.com - SkyPager: 1-888-260-8153

Check out the Pictures of the MARCA Field Day 1998
http://www.angelfire.com/az/kc7ayx/index.html

_____
Get Your Private, Free Email at http://www.hotmail.com

470. DIGIS.POS update coming soon

From: Jeff Brenton <jeffb@espi.com>
Date: Thu, 16 Jul 1998 23:48:43 -0500
To: DigiOwners <digiowners@lounet.com>
Cc: aprssig <aprssig@tapr.org>
Message-ID: <35AED7AB.7D1F@espi.com>
Rendered body type: text/plain

I've just spent a couple hours verifying some Florida digi reports for
an update to DIGIS.POS, to be released over the weekend. In the process,
I found 4 other digis that had not previously been reported....

So, I'm going to be pro-active about this; usually, I release a new
version of the files, and people pipe up 12 hours later, telling me what
they should have told me WEEKS before. In the spirit of Microsoft, this
is a "press release".... B-)

COMING SOON TO A WEB NEAR YOU! A *NEW* and *IMPROVED* digipeater list
for APRS! Release date July 19th.... Beta test copies available now!
Check the beta, find its bugs and missing features!

http://www.dididahdahdidit.com/text/digis.pos for the DOS version
http://www.dididahdahdidit.com/text/digis.log for Win/MacAPRS

Find the missing digipeater in YOUR area! Win thanks and praise (cash
value 1/100 of 1 cent) for your efforts!
--

Jeff Brenton, Ham Radio call KA9VNV
Questionable web page: http://www.dididahdahdidit.com
Covert supporter of the Vast Right Wing Conspiracy (tm)

471. Re: WinAPRS and Precision Mapping

From: n8exf@juno.com (R L BOEHM)
Date: Fri, 17 Jul 1998 00:48:58 -0400
To: w2hob@uscom.com
Cc: aprssig@tapr.org
Message-ID: <19980717.004923.11974.0.N8EXF@juno.com>
Rendered body type: text/plain

>W2HOB RESPONSE: Start WinAPRS like you always have. Slip in the PM CD
>and
>click on the top menu bar WINDOWS and then click on NEW MAP PREC
>MAPPING.
>You'll get the USA but you can manipulate it as with any other WinAPRS
>map.
>
>You need NOT install the PM CD-ROM. Just slip it in and let WinAPRS
>use the
>disc.
>
>Have fun es 73 de Boyd W2HOB

>
>
AND! don't forget to set the CDROM drive letter under OPT! I keep
forgetting to do that :)

73 de Bob, N8EXF // KN
homepage   http://www.qsl.net/n8exf

Igloos are polar bear snacks, crunchy on the outside, warm and chewy on
the inside.

_____
You don't need to buy Internet access to use free Internet e-mail.
Get completely free e-mail from Juno at http://www.juno.com
Or call Juno at (800) 654-JUNO [654-5866]

472. Follow-up to DIGIS.POS pre-announcement

From: Jeff Brenton <jeffb@espi.com>
Date: Fri, 17 Jul 1998 00:49:40 -0500
To: DigiOwners <digiowners@lounet.com>
Cc: aprssig <aprssig@tapr.org>
Message-ID: <35AEE5F4.15F1@espi.com>
Rendered body type: text/plain

Since posting my announcement about the upcoming update to DIGIS.POS, I
have added another 50 digis, based on information found on APRServe.

Unfortunately, due to a problem with WinAPRS (if you do a detailed
information search on too many stations, it generates unhandled
exceptions), I don't have complete information on most of these; I will
hopefully fix that in the next few days.... as quickly as WinAPRS will
let me!
--

Jeff Brenton, Ham Radio call KA9VNV
Questionable web page: http://www.dididahdahdidit.com
Covert supporter of the Vast Right Wing Conspiracy (tm)

473. Re: [APRSSIG:26300] Re: WinAPRS and Precision Mapping

From: Earl Needham <kd5xb@amsat.org>
Date: Thu, 16 Jul 1998 23:48:43 -0600
To: aprssig@tapr.org
Message-ID: <3.0.3.32.19980716234843.009e6100@mail.pdrpip.com>
Rendered body type: text/plain

At 05:30 PM 7/16/98 -0500, John W Wilson sent:
>I have had a problem with PM and WinAPRS myself. I don't see a way to
>integrate the mapping software. I thought it was just me, hi.
>
>
>John W. Wilson, KN4HX
>z004391b@bcfreenet.seflin.lib.fl.us

        Thanks for the input, John. I was really just curious -- my CD should be
here tomorrow or Saturday.

        7 3
        Earl

Earl Needham, KD5XB   mailto:KD5XB@AMSAT.ORG
Clovis, New Mexico   DM84 N34.403 W103.334
Registered: APRS/DOS & WinAPRS

474. Re: [APRSSIG:26309] Re: WinAPRS and Precision Mapping

From: Earl Needham <kd5xb@amsat.org>
Date: Thu, 16 Jul 1998 23:51:06 -0600
To: w2hob@uscom.com
Message-ID: <3.0.3.32.19980716235106.007b2850@mail.pdrpip.com>
Rendered body type: text/plain

At 10:02 PM 7/16/98 -0500, Boyd Prestwood sent:
<snip>
>>On Thu, 16 Jul 1998, Earl Needham wrote:
>>>   Is it necessary to fully install the Precision Mapping software in order
>>> to get the maps in WinAPRS, or is it enough to simply have the map
>>> directories somewhere on the machine?
<snip>
>W2HOB RESPONSE: Start WinAPRS like you always have. Slip in the PM CD and

>click on the top menu bar WINDOWS and then click on NEW MAP PREC MAPPING.
>You'll get the USA but you can manipulate it as with any other WinAPRS map.
>
>You need NOT install the PM CD-ROM. Just slip it in and let WinAPRS use the
>disc.

Thanks, Boyd, this is what I had hoped to hear. I'll probably just copy the map directories from the CD to my hard drive and let 'er rip...

Earl

Earl Needham, KD5XB
Cannon AFB, Clovis, NM N34.403 W103.334
mailto:KD5XB@AMSAT.ORG
Commercial Pilot
Airplane, Single Engine Land
Instrument Airplane
Private Privileges, Airplane Single Engine Sea

475. Watch your call signs!

From: Jeff Brenton <jeffb@espi.com>
Date: Fri, 17 Jul 1998 02:33:11 -0500
To: DigiOwners <digiowners@lounet.com>
Cc: aprssig <aprssig@tapr.org>
Message-ID: <35AEFE37.4E23@espi.com>
Rendered body type: text/plain

In collecting data for DIGIS.POS, I've come across a couple of stations that are asking for some trouble... One is operating as a digi, with no call sign programmed into the unit. Unfortunately, it got to me via TCP/IP, so I don't have it in my log.... but check around, folks.

The other is in Las Vegas, with the call sign programmed as "WIDE", and no real call in the BTEXT:

WIDE!3553.31N/11529.41W#PHG3460

Remember - it is perfectly legal to put ANYTHING in the TNC's MYCALL, but you MUST put a valid call sign in the BTEXT comments, and make sure the BTEXT is sent at less-than-10-minute intervals to keep it legal. I noticed that one digi took up my idea of changing the MYCALL to the grid square; but the real call is in the BTEXT, and everything is FCC-compatible.
--

Jeff Brenton, Ham Radio call KA9VNV
Questionable web page: http://www.dididahdahdidit.com
Covert supporter of the Vast Right Wing Conspiracy (tm)

476. Re: WinAPRS and Precision Mapping

From: Mark Fellhauer <sparkfel@primenet.com>
Date: Fri, 17 Jul 1998 02:16:07 -0700
To: jerryr@gate.net
Cc: aprssig@tapr.org
Message-ID: <3.0.5.32.19980717021607.007e5320@pop.primenet.com>
Rendered body type: text/plain

At 08:35 PM 7/16/98 -0500, you wrote:

>What type of problems are you having...WinAPRS and PM work great here!
>Jerry, KB4OAM
>

I've found the same thing. PM 3.0 works great with WinAPRS. My problem was getting a copy. Despite other people's claims I ended up paying the full $49.95 retail to get a copy. CDSoft or whatever that company is named was only selling the LITE version of 3.0 which is why their listed cost was so low. It appears that the Sprouls have no PM CD's to sell, and despite what I was told here (on the SIG), Chicago Maps is not offering any discounts to new purchasers. I got my copy at Fry's Electronics, as neither CompUSA or Best Buy, seem to carry PM.

Make sure that in the WinAPRS PM window you have selected the correct CD ROM path in the options box. This window is not the one found in the settings menu, but in the PM window which is selected from the Windows drop down box.

Mark

KC7BXS

477. Re: WinAPRS and Precision Mapping

From: Mark Fellhauer <sparkfel@primenet.com>
Date: Fri, 17 Jul 1998 02:20:43 -0700
To: w2hob@uscom.com, aprssig@tapr.org
Message-ID: <3.0.5.32.19980717022043.007d58e0@pop.primenet.com>
Rendered body type: text/plain

At 10:02 PM 7/16/98 -0500, Boyd Prestwood wrote:
>
>W2HOB RESPONSE: Start WinAPRS like you always have. Slip in the PM CD and
>click on the top menu bar WINDOWS and then click on NEW MAP PREC MAPPING.
>You'll get the USA but you can manipulate it as with any other WinAPRS map.
>
>You need NOT install the PM CD-ROM. Just slip it in and let WinAPRS use the
>disc.
>

This will only work if your CD ROM is set-up as drive D:, if not, you need
to click on the OPT button on the right hand side of the PM screen and
enter your correct CD ROM path. Since I have mutiple partitions and
removeable media devices, my CD Path is set up to start at drive R.

Mark
KC7BXS

478. WinAPRS and Precision Mapping

From: Don Bolstad <n9ihw@races.org>
Date: Fri, 17 Jul 1998 05:56:34 -0500
To: aprssig@tapr.org
Message-ID: <3.0.3.32.19980717055634.006b20bc@calcon.net>
Rendered body type: text/enriched

Need to have version 2.2.0 of WinAPRS to work with PM.

Earlier versions do not have the PM pick in he Windows drop down menu

~~~~~~

<bold>Don Bolstad   </bold>- e-mail: <<mailto: n9ihw@races.org
>

<bold>N9IHW</bold>   - web site:
<<http://www.races.org/mem/n9ihw>

~~~~~~

Webmaster for.......

  <bold><color><param>0000,8080,8080</param>Lake County RACES/ARES

</color></bold>   <<http://www.races.org>

 <color><param>8080,0000,0000</param> <bold>Troop 309 BSA -- Lake Zurich,
IL</bold></color><bold>
</bold><<http://www.bytemeusa.com/scouts/troop309>

<color><param>ffff,0000,0000</param> <bold>Explorer Post 2 -- Lake
Zurich, IL
</bold></color><<http://www.bytemeusa.com/scouts/post2>

479. Re: [APRSSIG:26308] To MIM or not to MIM

From: "Lloyd Verhage" <verhage@humec.ksu.edu>
Date: Fri, 17 Jul 1998 06:46:41 CST6CDT
To: aprssig@tapr.org
Message-ID: <1932BD22586@humec.ksu.edu>
Rendered body type: text/plain

> Anyone using a MIM module from Clement? And if so, with a Garmin
> receiver?

I've used it twice from a balloon. Works well, I have no complaints.

Lloyd Verhage
Kansas Near Space Project
www.ksu.edu/humec/knsp/

480. RE: [APRSSIG:26320] Re: WinAPRS and Precision Mapping

From: "Harry Burford" <hburford@airmail.net>
Date: Fri, 17 Jul 1998 07:49:14 -0500
To: <aprssig@tapr.org>
Message-ID: <000201bdb181$4dfbff60$716f6f6f@harryport>
Rendered body type: text/plain

You might want to check with the Sprouls again. Not counting the couple of weeks additional delay while they were on vacation, the turn around wasn't that bad for a PM3.0 copy. In fact, a miscommunication resulted in 2 copies being sent to me. The Sprouls should have at least one copy in inventory after I get this extra turned back around to them this weekend.

While waiting for my copy, I received a direct mail ad from Chicago Map offering PM3.0 for 19.95 + $7 ship. I'll have to check the ad again, but I don't think that was for the LITE version.

Harry - KA0TTY

-----Original Message-----
From: aprssig@tapr.org [mailto:aprssig@tapr.org] On Behalf Of Mark Fellhauer
Sent: Friday, July 17, 1998 4:21 AM
To: aprssig@tapr.org
Subject: [APRSSIG:26320] Re: WinAPRS and Precision Mapping

At 08:35 PM 7/16/98 -0500, you wrote:

>What type of problems are you having...WinAPRS and PM work great here!
>Jerry, KB4OAM
>

I've found the same thing. PM 3.0 works great with WinAPRS. My problem was getting a copy. Despite other people's claims I ended up paying the full $49.95 retail to get a copy. CDSoft or whatever that company is named was only selling the LITE version of 3.0 which is why their listed cost was so low. It appears that the Sprouls have no PM CD's to sell, and despite what I was told here (on the SIG), Chicago Maps is not offering any discounts to new purchasers. I got my copy at Fry's Electronics, as neither CompUSA or Best Buy, seem to carry PM.

Make sure that in the WinAPRS PM window you have selected the correct CD ROM path in the options box. This window is not the one found in the settings menu, but in the PM window which is selected from the Windows drop down box.

Mark
KC7BXS

481. Re: [APRSSIG:26324] Re: WinAPRS and Precision Mapping

From: Dave Kaplan <fluidpwr@m1.sprynet.com>
Date: Fri, 17 Jul 1998 09:15:14 -0500
To: APRSSIG@tapr.org
Message-ID: <3.0.5.32.19980717091514.0082f900@m1.sprynet.com>
Rendered body type: text/plain

At 07:54 AM 7/17/98 -0500, you wrote:

>While waiting for my copy, I received a direct mail ad from Chicago Map
>offering PM3.0 for 19.95 + $7 ship. I'll have to check the ad again, but I
>don't think that was for the LITE version.
>
>Harry - KA0TTY

I just called and told them I had received the mailer (when in reality I had read about it on the SIG) and they sold it to me for the $19.95 + $7 S & H. I tis the full version and works great! I saw a friend of mine driving 200 miles away in Des Moines and called him on his cell phone telling him EXACTLY where he was. He was amazed!

Dave

482. Re: [APRSSIG:26298] WinAPRS and Precision Mapping

From: Mark Sproul <msproul@ap.org>
Date: Fri, 17 Jul 1998 10:36:14 -0400

To: kd5xb@amsat.org, aprssig@tapr.org
Message-ID: <v03110704b1d5119e70a5@[165.1.27.20]>
Rendered body type: text/plain

At 5:31 PM -0400 7/16/98, Earl Needham wrote:
>   Is it necessary to fully install the Precision Mapping software in
>order
>to get the maps in WinAPRS, or is it enough to simply have the map
>directories somewhere on the machine?
>
>   7 3
>   Earl
>
>

No you do not need to install Prec Mapping at all. You do need to install
the OCX that is on our FTP site. THe Prec Mapping stuff is 100% integrated
into WinAPRS, you do NOT run 2 programs at the same time

Mark

____
Mark Sproul |Amateur Radio: KB2ICI
Software Engineer @ Assoc Press |
msproul@ap.org |Work: 609-860-7120
North Brunswick, NJ |Fax: 609-860-7129
http://msproul.rutgers.edu/
____

483. Re: New Kantronics Stuff

From: Michael Huslig <mhuslig@idir.net>
Date: Fri, 17 Jul 1998 10:44:31 -0500
To: aprssig@tapr.org
Message-ID: <199807171444.JAA01400@mail.kc.idir.net>
Rendered body type: text/plain

The real problem is interrupt latency in the KPC3 Plus. If the KPC3 Plus is
real busy with interrupts on the RS232 port and the radio port, it may not
be able to process the interrupt from the firmware UART on the GPSPORT in
time before a bit is lost. Although I give priority to the firmware UART on
the HC11, the HC11 does not easily allow interrupt nesting; if the HC11 is
already processing an interrupt, the interrupt from the firmware UART
usually has to wait.
Mike Huslig
mhuslig@kantronics.com or mhuslig@idir.net

At 03:53 PM 7/16/98 -0500, you wrote:
>Bob wrote:
>
>THe probelm is data verbosity. If you can turn off most sentences except
>for RMC or GGA, then you CAN operate at 4800, I think. Just dont let it
>send 12 other sentences at the same time..
>
>>
>
>And then there is the Garmin GPS III where you cannot select the
>sentences. It just keeps pumping them all out (much to my TOTAL
>disappointment) ...
>
>I talked to a Garmin Engineer about this and he basically said "we leave
>string selection up to the Software authors and do not plan to change the
>GPS III"
>
>Live and learn ...
>
>How are you coming on the COMM BUFFER OVERFLOW issue??
>
>Paul - WO4U
>
>____
>You don't need to buy Internet access to use free Internet e-mail.
>Get completely free e-mail from Juno at http://www.juno.com
>Or call Juno at (800) 654-JUNO [654-5866]
>
>

484. DeLorme Topo USA - NEW Topographic Mapping Software

From: Dave <deeaton@lycosmail.com>
Date: Fri, 17 Jul 1998 10:47:03 -0500
To: aprssig <aprssig@tapr.org>
Message-ID: <35AF71F7.F8E9CD42@lycosmail.com>
Rendered body type: text/plain

This must be the reason PM is giving version 3.0 at a discount because
they may be coming out with this kind of version (we hope). Just thought
I'd pass this along to the sig. At least you can take a look....enjoy.

http://www.delorme.com

Explore the entire US in amazing 2-D or 3-D topographic detail with Topo
USA. It's another
first from DeLorme, and you can haveit for only $99.95, priced far below
the competition.

Plus, you get a FREE Atlas & Gazetteer of your choice, any available
state, with your order for
Topo USA.

Topo USA is the ultimate tool for outdoor recreation. Here's what you
can do with this
four-CD-ROM set:

* Profile elevation changes for your next hike or drive with Topo USA
* Use Topo USA with your DeLorme GPS Receiver
* Search by placename, ZIP Code, latitude and longitude, geographic
feature and area code and
exchange
* Print customized topographic maps in color or black and white
* Explore enhanced USGS files providing outstanding detail, including
contours displayed at
50-to-100 foot intervals

You'll love Topo USA's value and the FREE Atlas & Gazetteer with your
order.

A new application, Solus Pro, included in Topo USA, allows maps to be
downloaded to Windows CE
and Palm Computing handhelds.

Plus, we have the Rhino Skin carrying case, the perfect pouch to carry
your DeLorme GPS
receiver and your Palm Computing handheld computer.

Call 1-800-569-8334 to order your copy today.

Or, visit http://www.delorme.com, and click on MAIL OFFERS to enter your
priority code and get
your FREE Atlas & Gazetteer.

(Be sure to use your Priority Code to take advantage of this special
offer.)

        Your promotional priority code is:
        Your customer number is:

Try it risk free! If you're not completely satisfied, return it to us
within 30 days for a
full refund (less shipping and handling).

Please allow $5.00 for shipping and handling for your order of Topo USA.

Note: Topo USA requires Windows 95 or later

Dave Eshelman
Vice President

485. detector

From: kd4emi@juno.com (Michael A Kantor)
Date: Fri, 17 Jul 1998 12:12:23 -0400
To: aprssig@tapr.org
Cc: aprs-fl@tapr.org
Message-ID: <19980717.121223.3582.1.kd4emi@juno.com>
Rendered body type: text/plain

Here is the low down on the detector..
I wanted to detail it to everyone and take a count as to how many were

interested in this and think it would be something worth making
available..

The lightning detector basically is just that..

It wont tell you the position of the lightning, only the range (circular)
within
100 miles. If your in a crowded area this may be of use, but stations
even like in South Florida, it might not prove very helpfull.

IT has made it easier to interface other devices to APRS, and should
anyone have any ideas, let me know--(seismagraphs, etc)

I am hoping to find a detector that gives some idea of location.
Mike KD4EMI@JUNO.COM

_____
You don't need to buy Internet access to use free Internet e-mail.
Get completely free e-mail from Juno at http://www.juno.com
Or call Juno at (800) 654-JUNO [654-5866]

486. Re: [APRSSIG:26329] detector

From: Bob Bruninga <bruninga@nadn.navy.mil>
Date: Fri, 17 Jul 1998 12:57:15 -0400 (EDT)
To: Michael A Kantor <kd4emi@juno.com>
Cc: aprssig@tapr.org
Message-ID: <Pine.SOL.3.96.980717125115.17081O-100000@arctic>
Rendered body type: text/plain

On Fri, 17 Jul 1998, Michael A Kantor wrote about his lightening detectr:

> It wont tell you the position of the lightning, only the range (circular)
> [out to] 100 miles....
> I am hoping to find a detector that gives some idea of location.

Let APRS be the integrator. Each station with a detector simply XMTS a
circle object on his map of the right radius circle. If there are three
stations with a detector, then the intersection of their circles will be
the location of the storm. SImple, done.

APRS has the ability to draw circle objects on the map of any color. My
suggestion would be RED for under 10 mile circles, yellow for under 30
mile circles and maybe purple for other circles.

WHile I dont necessarily want to see APRS maps get cluttered with this
kind of stuff, it is ceratinly a good experiment to try out.   If it
works, then we decide what to do with it...

bob

487. RE: [APRSSIG:26327] Re: New Kantronics Stuff

From: "Malarcher, Paul E" <pemalarc@amp.com>
Date: Fri, 17 Jul 1998 13:28:38 -0400
To: aprssig@tapr.org
Message-ID: <199807171728.MAA00655@tapr.org>
Rendered body type: text/plain

Would it help to increase the baud rate on the RS232 port so that it "talks"
faster but less often? Alternatively, has Kantronics considered switching
the two ports so that the one that doesn't work well above 2400 baud talks
to the computer (whose rate I can adjust) instead of the GPS (which I can't
adjust)? Or am I missing something?

Also, I think Mike Huslig mentioned earlier that only some of the data would
be lost, how bad is this likely to be from the user's point of view?

Paul, WB2CNF

> ----------
> From: Michael Huslig[SMTP:mhuslig@idir.net]
> Sent: Friday, July 17, 1998 11:46 AM
> To: aprssig@tapr.org
> Subject: [APRSSIG:26327] Re: New Kantronics Stuff
>
> The real problem is interrupt latency in the KPC3 Plus. If the KPC3 Plus
> is
> real busy with interrupts on the RS232 port and the radio port, it may not
> be able to process the interrupt from the firmware UART on the GPSPORT in
> time before a bit is lost. Although I give priority to the firmware UART

> on
> the HC11, the HC11 does not easily allow interrupt nesting; if the HC11 is
> already processing an interrupt, the interrupt from the firmware UART
> usually has to wait.
> Mike Huslig
> mhuslig@kantronics.com or mhuslig@idir.net
>
> At 03:53 PM 7/16/98 -0500, you wrote:
> >Bob wrote:
> >
> >THe probelm is data verbosity. If you can turn off most sentences except
> >for RMC or GGA, then you CAN operate at 4800, I think. Just dont let it
> >send 12 other sentences at the same time..
> >
> >>
> >
> >And then there is the Garmin GPS III where you cannot select the
> >sentences. It just keeps pumping them all out (much to my TOTAL
> >disappointment) ...
> >
> >I talked to a Garmin Engineer about this and he basically said "we leave
> >string selection up to the Software authors and do not plan to change the
> >GPS III"
> >
> >Live and learn ...
> >
> >How are you coming on the COMM BUFFER OVERFLOW issue??
> >
> >Paul - WO4U
> >
> >____
> >You don't need to buy Internet access to use free Internet e-mail.
> >Get completely free e-mail from Juno at http://www.juno.com
> >Or call Juno at (800) 654-JUNO [654-5866]
> >
> >
>

488. Tools

From: Doug Wetzel <dwetzel@earthlink.net>
Date: Fri, 17 Jul 1998 10:43:59 -0700
To: aprssig@tapr.org
Message-ID: <3.0.32.19980717104359.00a8c7b8@earthlink.net>
Rendered body type: text/plain

Slightly off subject, but related to tracker construction...

Anyone know of a tool that will punch a DB25 or DB9 size and shape hole in
plastic or light metal?

TIA

Doug Wetzel
K7IP
Seattle APRS Coordinator
47 38 00N 122 20 29W
ICQ 164635

dwetzel@earthlink.net

http://home.earthlink.net/~dwetzel

489. Re: [APRSSIG:26332] Tools

From: "David VanHorn" <dvanhorn@cedar.net>
Date: Fri, 17 Jul 1998 13:05:02 -0500
To: <dwetzel@earthlink.net>, <aprssig@tapr.org>
Message-ID: <000c01bdb1ad$6f86b680$66f135ce@xenu>
Rendered body type: text/plain

>Slightly off subject, but related to tracker construction...
>
>Anyone know of a tool that will punch a DB25 or DB9 size and shape hole in
>plastic or light metal?

Greenlee makes them, they're not cheap, but they're good.

490. Re: [APRSSIG:26332] Tools

From: William Nolle <wa8inz@airnet.net>
Date: Fri, 17 Jul 1998 13:20:06 -0500
To: APRSsig <aprssig@tapr.org>
Message-ID: <35AF95D6.A7A158B7@airnet.net>
Rendered body type: text/plain

Doug Wetzel wrote:

> Slightly off subject, but related to tracker construction...
>
> Anyone know of a tool that will punch a DB25 or DB9 size and shape hole in
> plastic or light metal?
>
> TIA
>
> Doug Wetzel
> K7IP
> Seattle APRS Coordinator
> 47 38 00N 122 20 29W
> ICQ 164635
>
> dwetzel@earthlink.net
>
> http://home.earthlink.net/~dwetzel

Yes Doug but you may not like the price. Mouser, DigiKey or any of those have
them.

--
Bill Nolle wa8inz
wa8inz@airnet.net
wa8inz@amsat.org
Hazel Green, AL

491. RE: [APRSSIG:26332] Tools

From: Robert_Manzanares@racalcomm.com
Date: Fri, 17 Jul 1998 14:36:24 -0400
To: aprssig@tapr.org
Message-ID: <7C54791B76BFD111BCEE0060979F982F13EF38@rci03.racalcomm.com>
Rendered body type: text/plain

Anyone know of a tool that will punch a DB25 or DB9 size and
shape hole in plastic or light metal?

        Yeah, a Greenlee punch, but they'll well over $100. How many
holes do you need to cut? A dremel tool and a steady hand have always
worked for me.
        The key is to drill the four corner holes first, then carefully
cut out the remaining material. Start from the center and work your way
out. Take it slow, and be patient.

        Robert
        N3LGC

492. AR-210 TNC Good news/Bad news

From: Kevin Kelly <kkelly@radix.net>
Date: Fri, 17 Jul 98 15:05:07 -0500
To: "aprssig@tapr.org" <aprssig@tapr.org>
Message-ID: <199807171902.PAA00458@saltmine.radix.net>
Rendered body type: text/plain

Greetings SIG.

I recently received my AR- 210 made by AOR and immediately opened the case
to look at the EPROM. The Bad news is does not have a standard EPROM
installed. It does have a Toshiba TC54256AF EPROM installed. It is unusual
because it is in a Surface Mount socket and is a dual inline 28 leg SMT
device (not a plcc package). The eprom is removable and perhaps re-
programmable.   (A digital photo of the inside is available for email, or
upload if you would like to see the inside of this TNC. Just drop me an
email request.)

The Good news is that if anybody can figure where to get a data sheet on
this device, maybe the nice folks at PacComm could put together updated
firmware that supports the more recent TNC features like GPS. PacComm has
already done this sort of thing with the Heathkit HK-21 upgrade/updated
firmware.

I "think" the current PacComm HK-21 firmware program, if installed in the
above device might work. The AR-210 looks like a Surface Mount Technology
(SMT) version of the older HK-21.

If nothing else the currently installed firmware in the AR-210, Release date
15 Mar 1992 will still work fine as a digipeater.

Any of you EPROM gurus out there have any suggestions??

73,
Kevin Kelly/N6QAB
kkelly@radix.net

493. Re: [APRSSIG:26329] detector

From: kd4emi@juno.com (Michael A Kantor)
Date: Fri, 17 Jul 1998 15:40:58 -0400
To: bruninga@nadn.navy.mil
Cc: kd4emi@juno.com, aprssig@tapr.org
Message-ID: <19980717.154526.3582.1.kd4emi@juno.com>
Rendered body type: text/plain

On Fri, 17 Jul 1998 12:57:15 -0400 (EDT) Bob Bruninga
<bruninga@nadn.navy.mil> writes:

>> It wont tell you the position of the lightning, only the range
>(circular)
>> [out to] 100 miles....
>> I am hoping to find a detector that gives some idea of location.
>
>Let APRS be the integrator. Each station with a detector simply XMTS
>a
>circle object on his map of the right radius circle. If there are
>three
>stations with a detector, then the intersection of their circles will
>be
>the location of the storm. SImple, done.

I like this idea...lets work it out !

Mike

>
>APRS has the ability to draw circle objects on the map of any color.
>My
>suggestion would be RED for under 10 mile circles, yellow for under 30
>mile circles and maybe purple for other circles.
>
>WHile I dont necessarily want to see APRS maps get cluttered with this
>kind of stuff, it is ceratinly a good experiment to try out.   If it
>works, then we decide what to do with it...
>
>bob
>
>
>

494. Re: [APRSSIG:26336] AR-210 TNC Good news/Bad news

From: kd4emi@juno.com (Michael A Kantor)
Date: Fri, 17 Jul 1998 15:44:44 -0400
To: kkelly@radix.net
Cc: aprssig@tapr.org
Message-ID: <19980717.154526.3582.3.kd4emi@juno.com>
Rendered body type: text/plain

It is possible to download the instruction set, but might be set up to
have
checksums etc that might make reprogramming "time consuming"
KD4EMI@JUNO.COM

On Fri, 17 Jul 1998 14:03:28 -0500 (CDT) Kevin Kelly <kkelly@radix.net>
writes:
>Greetings SIG.
>
>I recently received my AR- 210 made by AOR and immediately opened the
>case
>to look at the EPROM. The Bad news is does not have a standard EPROM
>installed. It does have a Toshiba TC54256AF EPROM installed. It is
>unusual

>because it is in a Surface Mount socket and is a dual inline 28 leg
>SMT
>device (not a plcc package). The eprom is removable and perhaps re-
>programmable.   (A digital photo of the inside is available for email,
>or
>upload if you would like to see the inside of this TNC. Just drop me
>an
>email request.)
>
>The Good news is that if anybody can figure where to get a data sheet
>on
>this device, maybe the nice folks at PacComm could put together
>updated
>firmware that supports the more recent TNC features like GPS. PacComm
>has
>already done this sort of thing with the Heathkit HK-21
>upgrade/updated
>firmware.
>
>I "think" the current PacComm HK-21 firmware program, if installed in
>the
>above device might work. The AR-210 looks like a Surface Mount
>Technology
>(SMT) version of the older HK-21.
>
>If nothing else the currently installed firmware in the AR-210,
>Release date
>15 Mar 1992 will still work fine as a digipeater.
>
>Any of you EPROM gurus out there have any suggestions??
>
>73,
>Kevin Kelly/N6QAB
>kkelly@radix.net
>
>

_____
You don't need to buy Internet access to use free Internet e-mail.
Get completely free e-mail from Juno at http://www.juno.com
Or call Juno at (800) 654-JUNO [654-5866]

495. Re: [APRS-FL:2060] detector

From: kd4emi@juno.com (Michael A Kantor)
Date: Fri, 17 Jul 1998 15:41:37 -0400
To: AtwoodJ@cts.db.erau.edu
Cc: aprssig@tapr.org
Message-ID: <19980717.154526.3582.2.kd4emi@juno.com>
Rendered body type: text/plain

The one I use is HAND HELD !!

Mike

On Fri, 17 Jul 1998 13:38:36 -0400 AtwoodJ@cts.db.erau.edu (Jeff Atwood)
writes:
>   I am interested in a lightening detector that operates on 12
>volts and
>   can operate in a vehicle. They make detectors for aircraft that
>give
>   position and distance so I know they can me made or adapted for
>mobile
>   use. However, the aircraft detectors are very expensive and in
>a high
>   user end market. Do you or anyone know of detectors that can be
>adapted
>   for mobile use whether or not they are 12 volt or offer
>position as well
>   as distance.
>
>   Jeff Atwood, KE4TCV
>   atwoodj@cts.db.erau.edu
>
>
>_____ Reply Separator
>_____
>Subject: [APRS-FL:2060] detector
>Author: kd4emi@juno.com at Internet-Mail

>Date: 7/17/98 11:24 AM
>
>
>Here is the low down on the detector..
>I wanted to detail it to everyone and take a count as to how many were
>
>interested in this and think it would be something worth making
>available..
>
>The lightning detector basically is just that..
>
>It wont tell you the position of the lightning, only the range
>(circular)
>within
>100 miles. If your in a crowded area this may be of use, but stations
>
>even like in South Florida, it might not prove very helpfull.
>
>IT has made it easier to interface other devices to APRS, and should
>anyone have any ideas, let me know--(seismagraphs, etc)
>
>I am hoping to find a detector that gives some idea of location.
>Mike KD4EMI@JUNO.COM
>
>____
>You don't need to buy Internet access to use free Internet e-mail.
>Get completely free e-mail from Juno at http://www.juno.com
>Or call Juno at (800) 654-JUNO [654-5866]
>
>

____
You don't need to buy Internet access to use free Internet e-mail.
Get completely free e-mail from Juno at http://www.juno.com
Or call Juno at (800) 654-JUNO [654-5866]

496. - NEW Topographic Mapping Software

From: kd4emi@juno.com (Michael A Kantor)
Date: Fri, 17 Jul 1998 15:39:56 -0400
To: deeaton@lycosmail.com
Cc: aprssig@tapr.org
Message-ID: <19980717.154526.3582.0.kd4emi@juno.com>
Rendered body type: text/plain

KD4EMI writes
This is the software that I was beta testing.
I have not recieved the final release yet, but the version I had does all
that is listed
below, plus the topo maps have streets on them...

There are some caveats which I will discuss when I get the final
version...

Mike
KD4EMI

On Fri, 17 Jul 1998 10:56:23 -0500 (CDT) Dave <deeaton@lycosmail.com>
writes:
>This must be the reason PM is giving version 3.0 at a discount because
>they may be coming out with this kind of version (we hope). Just
>thought
>I'd pass this along to the sig. At least you can take a look....enjoy.
>
>http://www.delorme.com
>
>
>Explore the entire US in amazing 2-D or 3-D topographic detail with
>Topo
>USA. It's another
>first from DeLorme, and you can haveit for only $99.95, priced far
>below
>the competition.
>
>Plus, you get a FREE Atlas & Gazetteer of your choice, any available
>state, with your order for
>Topo USA.
>
>Topo USA is the ultimate tool for outdoor recreation. Here's what you

>can do with this
>four-CD-ROM set:
>
>* Profile elevation changes for your next hike or drive with Topo USA
>* Use Topo USA with your DeLorme GPS Receiver
>* Search by placename, ZIP Code, latitude and longitude, geographic
>feature and area code and
>exchange
>* Print customized topographic maps in color or black and white
>* Explore enhanced USGS files providing outstanding detail, including
>contours displayed at
>50-to-100 foot intervals
>
>You'll love Topo USA's value and the FREE Atlas & Gazetteer with your
>order.
>
>A new application, Solus Pro, included in Topo USA, allows maps to be
>downloaded to Windows CE
>and Palm Computing handhelds.
>
>Plus, we have the Rhino Skin carrying case, the perfect pouch to carry
>your DeLorme GPS
>receiver and your Palm Computing handheld computer.
>
>Call 1-800-569-8334 to order your copy today.
>
>Or, visit http://www.delorme.com, and click on MAIL OFFERS to enter
>your
>priority code and get
>your FREE Atlas & Gazetteer.
>
>(Be sure to use your Priority Code to take advantage of this special
>offer.)
>
>   Your promotional priority code is:
>   Your customer number is:
>
>Try it risk free! If you're not completely satisfied, return it to us
>within 30 days for a
>full refund (less shipping and handling).
>
>Please allow $5.00 for shipping and handling for your order of Topo
>USA.
>
>Note: Topo USA requires Windows 95 or later
>
>Dave Eshelman
>Vice President
>
>

_____
You don't need to buy Internet access to use free Internet e-mail.
Get completely free e-mail from Juno at http://www.juno.com
Or call Juno at (800) 654-JUNO [654-5866]

497. Pico Packet (2-serial port) problems with a Macintosh

From: "Bruce W. Martin" <tapr@kq4tv.aprs.net>
Date: Fri, 17 Jul 1998 15:45:23 -0500
To: "aprssig" <aprssig@tapr.org>
Message-ID: <199807172046.PAA28317@ci991337-a.nash1.tn.home.com>
Rendered body type: text/plain

I have a Pico Packet (2-serial port) that I have used with my Macintosh laptop for about 2 months. Everything worked fine until one day the CPU and 2nd serial port board decided they had had enough and commited suicide. I sent the unit back to the factory to be repaired. When I got it back it worked fine for about two weeks and then quit communicating with my Macintosh. I tested the Pico and it communicates with my Newton and my PC laptop. I took the pico apart and jumpered the reset jumper for a few hours and put things back together and lo it worked again, for about an hour, and then no communications with the Mac.

Is there an adjustment that can be made in the pico to make it communicate reliably with a Macintosh or do I need to send it back to the factory again.

Bruce, KQ4TV

```
--
 Bruce W. Martin          Grid: EM66QE
 HAM Call: KQ4TV          APRS: 3610.50N/08635.50W
  the other half of the NT4L rover team
 URLs:  http://kq4tv.aprs.net/
       NT4L Rover Operations Page:
        http://kq4tv.aprs.net/vhf/vhf.html
```

498. APRSSERVE Refresh Question

From: rdrumhel@csc.com
Date: Fri, 17 Jul 1998 13:37:52 -0700
To: aprssig@tapr.org
Message-ID: <88256644.006B12FD.00@csc.com>
Rendered body type: text/plain

Greetings:

I am connecting to the Florida composite USA server via TCP/IP. My question is that after the initial posting of my station and others in the San Diego area, I never see a refresh. I have the time being displayed for each station icon and none get reset, so after an hour (my drop off time) the stations disappear. My station at home sends out weather info every 15 minutes, but it never gets posted on APRSSERVE. The same condition happens with the Illinoise server which is in sync with Flordia. If I close the TCP/IP port and reopen it, I get the most current info, but then it never updates after that. I am using WinAPRS 2.2.0. All stations on my San Diego map stay the same as far as the "AGE" time is concerned. I even have "auto map update" turned on. If I go to the "when heard display", it shows that no traffic other than the initial has been posted.

I think this worked fine until the APRSSERVE server went down the other day.

Any ideas?

Thanks,
Ron

499. Re: [APRSSIG:26341] Pico Packet (2-serial port) problems with a Macintosh

From: William Nolle <wa8inz@airnet.net>
Date: Fri, 17 Jul 1998 16:20:36 -0500
To: APRSsig <aprssig@tapr.org>
Message-ID: <35AFC024.D359FB9E@airnet.net>
Rendered body type: text/plain

Bruce W. Martin wrote:

> Is there an adjustment that can be made in the pico to make it
> communicate reliably with a Macintosh or do I need to send it back to the
> factory again.
>
> Bruce, KQ4TV
>
>

Bruce you will have this problem forever. I know I will get some flack for this from some but I have had two of those and unless you get a rare bird that works good for the most part most everyone that has a PicoPacket has had problems with. It's really a shame. Send it back untill it's right, I did this with both of mine several times and they never where right.

Ok Pico owners start firing away.

--
Bill Nolle wa8inz
wa8inz@airnet.net
wa8inz@amsat.org
Hazel Green, AL

500. VBX-2 Launch info.

From: Valentino Sarro <ve6szr@rac.ca>
Date: Fri, 17 Jul 1998 15:43:19 -0600
To: APRS SIG - TAPR <aprssig@tapr.org>
Message-ID: <35AFC577.512166C6@rac.ca>
Rendered body type: text/plain

On August 8th, 1998, VBX-2 (Vernon Balloon eXperiments 2) will
be launched. Last year the package was a crossband repeater on
446.00Mhz input & 146.52Mhz output. Once again VBX-2 will
include a crossband repeater on the above stated frequencies and it
will also include a APRS beacon on 144.39. VBX-2 Will also be
visible via on javAPRS at Steve Dimse's (K4HG) page in Florida at
www.aprs.net. Launch time will be 19:30 GMT (10:30am pacific time)
from the Watson House, Vernon, British Columbia. Talk in and
coordination in the Vernon area will take place on the Silver Star
repeater (146.88-). Please check the VBX Website
(http://www.junction.net/norac/vbx) for more info as well as a notice
on launch day with an expected path that VBX-2 will take.

--

 Tino Sarro, VE6SZR
 Calgary, Alberta, CANADA
 Grid: DO20WW   The Wild Rose Network
 50deg 56'40.8"N
http://www.cadvision.com/grantd/WILDROSE.HTM
 114deg 06'44.2"W

 Email: ve6szr@rac.ca
 PGP Key Fingerprint: 21C9 3690 CAD4 D579 33F4 9C58 24C0 1D40 A60F 25A8

501. paccom upgrade

From: deunju@juno.com (DALE E URBAN)
Date: Fri, 17 Jul 1998 16:57:56 CDT
To: aprssig@tapr.org
Message-ID: <19980717.165800.8462.4.DEUNJU@juno.com>
Rendered body type: text/plain

I bought the eprom from paccom to make a mfj-1270-b into a aprs digi.
when I installed the eprom as the old one came out and powered it up the
sta and the con lights come on and stay on and I get no sign on message.
I put the old eprom back in and the tnc works fine. Tried 2 tnc's with
the same results. Have e-mailed paccom with the problem but thought
someone on the sig might be faster with a cure....Thanks
Dale Urban N0KQX
Garden City Ks.

_____
You don't need to buy Internet access to use free Internet e-mail.
Get completely free e-mail from Juno at http://www.juno.com
Or call Juno at (800) 654-JUNO [654-5866]

502. lightning

From: kd4emi@juno.com (Michael A Kantor)
Date: Fri, 17 Jul 1998 18:06:20 -0400
To: aprssig@tapr.org
Message-ID: <19980717.180622.3166.0.kd4emi@juno.com>
Rendered body type: text/plain

I have found a commercial device that can give position location of
lightning.
It interfaces to a computer.

I will try and humbly ask the wife if I can buy one -- after I already
ordered it, and get it sent here overnight...(I thought you said it was
ok honey ?)

This would really make a difference with the whole lightning detection
scheme.
One station or digi, could maintain the lightning alert site, perhaps
supported by the local hams.. (maybe reverse engineer it ? wink wink)

Will keep you posted.
MIke KD4EMI@JUNO.COM

_____
You don't need to buy Internet access to use free Internet e-mail.
Get completely free e-mail from Juno at http://www.juno.com

Or call Juno at (800) 654-JUNO [654-5866]

503. 3" Stealth Digi

From: Bob Bruninga <bruninga@nadn.navy.mil>
Date: Fri, 17 Jul 1998 18:31:54 -0400 (EDT)
To: aprssig@tapr.org
Message-ID: <Pine.SOL.3.96.980715165756.18859A-100000@arctic>
Rendered body type: text/plain

Bill used a 4" pipe due to the size of his batteries and and HT with Handipkt TNC back-to-back (great design!). I'm building one in a 3" PVC pipe using the Alinco DJ-190 (with battery pack removed) on top of a Pico TNC and two 4-Dcell battery holders below that. All bolted to an 18" by 2.5" strip of Aluminum. Thus the lower half stays under 19" and can serve as the bottom half of a dipole. Here are the PVC materials:

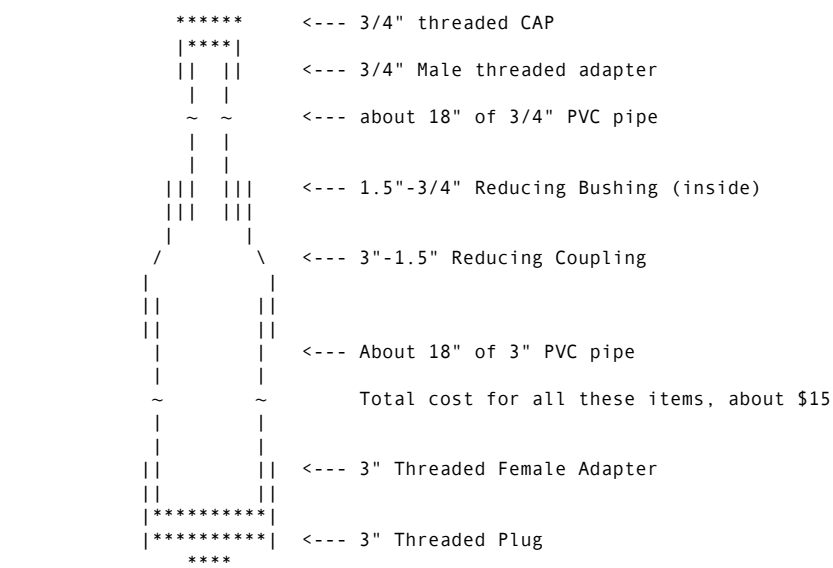
<--- 3/4" threaded CAP
<--- 3/4" Male threaded adapter
<--- about 18" of 3/4" PVC pipe
<--- 1.5"-3/4" Reducing Bushing (inside)
<--- 3"-1.5" Reducing Coupling
<--- About 18" of 3" PVC pipe
Total cost for all these items, about $15
<--- 3" Threaded Female Adapter
<--- 3" Threaded Plug

The whole lower section will be the lower half of a dipole and a 3/4" aluminum element 19" long inside the upper half will be the upper element. THus the entire Digi exists in the space of a 2m vertical dipole and matches 50 ohms with a broadside radiation pattern.

My digi is not complete yet, but I wanted to get the list of parts out to you, since it took me a good half hour to identify the correct mating plumbing fixtures and of course the store personnel were of little help, since it was not a sink or a toilet.

Normally I will probably run the digi on 6 cells (about 2 watts out at 9 volts) since that will give longer life then if I put in all 8 cells to get 5 watts out but shorter life due to the higher draw. Dont be tempted to run the digi on only 4 cells. The TNC will quickly die as the battery voltage drops slightly below 6..

I used a threaded top cap so that I can drill a hole in it for the hanging fixture. But I can also replace it if I change to another hanging means. Dont hang it on a string with the KNOT INSIDE! Water will trickle down the rope, through the hole and flood your baby...

WHen I get to the point of radiating, I will forward the exact lengths of the aluminum baseplate and upper element... But that might take a while.
bob

504. Re: [APRSSIG:26285] Re: Garmin in an Airplane

From: Richard Amirault <amirault@tiac.net>
Date: Fri, 17 Jul 1998 21:37:06 -0400 (EDT)
To: John W Wilson <z004391b@bc.seflin.org>
Cc: aprssig@tapr.org
Message-ID: <Pine.BSF.3.96.980717213348.4724I-100000@shell2.tiac.net>
Rendered body type: text/plain

On Thu, 16 Jul 1998, John W Wilson wrote:

> I would have loved to run a tracker but they would have tossed me out the
> door at 34 thousand. Quite against the rules to run a radio, never mind
> a transmitter. Hi. Although, the GPS is really a radio, isn't it?

As I understand it:

It is "against the rules" to run any electronic equipment that is not
specifically listed as permitted. The air crew *cannot* add anything to
that list, but they (the captain) can *remove* items from that list.

The only way to get legal permission to operate something not on the
list is from the "operator" of the aircraft....the airline company.

Richard Amirault N1JDU Boston, Massachusetts USA
amirault@tiac.net "Go Fly A Kite"

505. XYL uses for APRS

From: Wes Johnston <kd4rdb@eagnet.com>
Date: Fri, 17 Jul 1998 22:00:16 -0400
To: aprssig@tapr.org
Message-ID: <3.0.32.19980717220014.006a406c@gena>
Rendered body type: text/plain

My lovely and talented XYL has discovered a new use for aprs. She has
marked all the garage sales in town on the map, and has optimized her
route. Says she: "if i just went thru the newspaper, I could drive all
over town, back and forth". Since time is of the essense and all of the
good deals are gone by noon, she will operate with the laptop as her co-pilot.
Wes
Email: mailto:kd4rdb@usa.net
APRS: http://www.qsl.net/kd4rdb/aprs.htm
A good traveler has no fixed plans and is not intent on arriving.

506. lightning detector revisited

From: Wes Johnston <kd4rdb@eagnet.com>
Date: Fri, 17 Jul 1998 22:03:16 -0400
To: kd4emi@juno.com, aprssig@tapr.org
Message-ID: <3.0.32.19980717220315.006f9bcc@gena>
Rendered body type: text/plain

I have heard that in Florida that you have greater odd's of being struck by
lightning than winning the lotto.... how about a "lotto detector" that I
can wear on my belt?
Wes
Email: mailto:kd4rdb@usa.net
APRS: http://www.qsl.net/kd4rdb/aprs.htm
A good traveler has no fixed plans and is not intent on arriving.

507. Re: [APRSSIG:26347] 3" Stealth Digi

From: Roger Grady <k9opo@netusa1.net>
Date: Fri, 17 Jul 1998 21:58:28 -0400 (EDT)
To: aprssig@tapr.org
Message-ID: <199807180158.VAA21950@gatem02.netusa1.net>
Rendered body type: text/plain

Interesting design, Bob. I'm getting really tempted to build one of these
even though I don't really have a need for it. I love building stuff out of
plumbing parts!

I'll be interested to see if you have problems with the antenna being so
close to the electronics.

Roger Grady K9OPO

508. Re: [APRSSIG:26308] To MIM or not to MIM

From: Rick Walter <rwalter@rain.millersv.edu>
Date: Fri, 17 Jul 1998 23:55:29 -0400 (EDT)
To: AB <abrookes@sympatico.ca>
Cc: aprssig@tapr.org
Message-ID: <Pine.SOL.3.95.980717235253.21485A-100000@cyclone>
Rendered body type: text/plain

Hi Adrian.

I have been using the MIM module and a Garmin 45 XL and they work well.
One problem I ran across is using the CW ID and the string of data from
the GPS receiver. If they are both on, the data (coming each second from
the Garmin) screws up the CW ID, then the whole thing starts sending
garbage. I sent E-mail to Mr. Clement a long time ago and he acknowledged
the problem and told me he would look into it. I never heard from him
again.

Rick WB3CSY

On Thu, 16 Jul 1998, AB wrote:

> Greetings,
>
> Anyone using a MIM module from Clement? And if so, with a Garmin
> receiver?
>
> Just curious about comments. I only want to send position
> from a vehicle and view it from the various internet
> sites via landline, and I thought the MIM was an interesting
> alternative to tying up a KPC or similar as I only want the
> transmit ability.
>
> 73, Adrian
> --
>
>

509. CQ WA6EZV

From: n8exf@juno.com (R L BOEHM)
Date: Fri, 17 Jul 1998 23:42:37 -0400
To: aprssig@tapr.org
Message-ID: <19980717.235526.11790.0.N8EXF@juno.com>
Rendered body type: text/plain

Bob,
Are you on this SIG???

73 de Bob, N8EXF // KN
homepage   http://www.qsl.net/n8exf

Igloos are polar bear snacks, crunchy on the outside, warm and chewy on
the inside.

_____
You don't need to buy Internet access to use free Internet e-mail.
Get completely free e-mail from Juno at http://www.juno.com
Or call Juno at (800) 654-JUNO [654-5866]

510. Re: [APRSSIG:26348] Re: Garmin in an Airplane

From: "Brent Hildebrand" <bhildebrand@earthlink.net>
Date: Fri, 17 Jul 1998 21:33:55 -0700
To: <amirault@tiac.net>, <aprssig@tapr.org>
Message-ID: <005a01bdb205$46fcdfc0$d461fea9@dell>
Rendered body type: text/plain

See the following web site and look for the GPS on Commerical Aircraft link.
http://joe.mehaffey.com Look for the "Information" section. BH, KH2Z

-----Original Message-----
From: Richard Amirault <amirault@tiac.net>
To: aprssig@tapr.org <aprssig@tapr.org>
Date: Friday, July 17, 1998 6:45 PM
Subject: [APRSSIG:26348] Re: Garmin in an Airplane

>On Thu, 16 Jul 1998, John W Wilson wrote:
>
>> I would have loved to run a tracker but they would have tossed me out the
>> door at 34 thousand. Quite against the rules to run a radio, never mind
>> a transmitter. Hi. Although, the GPS is really a radio, isn't it?
>
>As I understand it:
>
>It is "against the rules" to run any electronic equipment that is not
>*specifically* listed as permitted. The air crew *cannot* add anything to
>that list, but they (the captain) can *remove* items from that list.
>
>The only way to get legal permission to operate something not on the
>list is from the "operator" of the aircraft....the airline company.
>
>Richard Amirault   N1JDU   Boston, Massachusetts USA
>amirault@tiac.net   "Go Fly A Kite"

>
>

511. Re: [APRSSIG:26332] Tools

From: Bobbbe@aol.com
Date: Sat, 18 Jul 1998 00:26:38 EDT
To: dwetzel@earthlink.net, aprssig@tapr.org
Message-ID: <a9c22476.35b02400@aol.com>
Rendered body type: text/plain

In a message dated 98-07-17 14:08:50 EDT, dwetzel@earthlink.net writes:

<< Slightly off subject, but related to tracker construction...

 Anyone know of a tool that will punch a DB25 or DB9 size and shape hole in
 plastic or light metal?
  >>
try Greenlee products, they make nice hole punches.

512. 144.39

From: "Jimmy Burkhalter" <kb5wio@tcac.net>
Date: Sat, 18 Jul 1998 01:34:07 -0500
To: "Maury Sproul" <msproul@arnet.arn.net>, "Bob Bruninga" <wb4apr@amsat.org>,
        "Leland Carpenter N5VRN" <lcarpen@arn.net>,
        "Ben Pollard WS5R" <classicferm@fia.net>, <aprssig@tapr.org>,
        "Keith Sproul WU2Z" <ksproul@hardees.rutgers.edu>,
        "Mark Sproul KB2ICI" <sproul@ap.org>
Message-ID: <000a01bdb216$10bba700$3c2c32cf@jimmy.tcac.net>
Rendered body type: text/plain

Just for info I have switched the NWS and my stations here in Amarillo over
to 144.39 to comply with the rest of the country.

        Please note the changes for this area.

Jimmy Burkhalter   KB5WIO
Amarillo, Texas

kb5wio@tcac.net

35:9:6 N 101:52:32 W

513. Habitat Balloon Launch July 18 (fwd)

From: "Don Pfister KA0JLF <donp@jerryc.sound.net>" <donp@netlab.org> (by way of Don Pfister KA0JLF <dpfister@kc.net>)
Date: Sat, 18 Jul 1998 05:21:15
To: n0lrf@ott.net, JMalone920@aol.com, EDawson553@aol.com, jerryc@netlab.org,
        donp@netlab.org, dpfister@kc.net, bobdavis@cadvantage.com,
        rdavis@nyx.net, hmyers@qni.com, jim@preeminent.com, pinoch@tfs.net,
        rieper@primary.net, twheeler@tfs.net, snelson@juno.com,
        ROCKINKS@aol.com, junejeffers@juno.com, chadwick@fsl.noaa.gov,
        ewbankj@dmci.net, stephenrd@aol.com, jtm@MO.NET, kc5jgv@juno.com,
        jghall@ArkansasUSA.com, stephen_rd@yahoo.com,
        kb0tvj@bouldernews.infi.net, n0dvg@mail.midusa.net, rsaxena@swbell.net,
        tharkness@triplei.com, apfister@kc.net, pfister@rcia.com,
        rexp3@juno.com, jlhunter1@juno.com,
        "Lloyd Verhage" <verhage@humec.ksu.edu>, weirwolf@sprintmail.com,
        jim.dex@kc.net, SUSIE STITT <gs11441@navix.net>,
        TMcCuiston@compuserve.com, ewbankj@dmci.net, shandler@dorsai.org,
        richc@netlab.org, madmax2084@earthlink.net, lizbeth@netlab.org,
        pfisterj_at_hsl48@airlant.navy.mil, johndye@feist.com,
        gheislen@swbell.net, wallio@dsmnet.com, purple@cdsnet.net,
        k0ozv@juno.com, n3kkm@kc.net, erbsurfer@aol.com,
        mconner@mail.neonramp.com, numbers@primenet.com, twatson@qni.com,
        donald.pfister@mail.sprint.com, knsp@humec.ksu.edu, aprssig@tapr.org
Message-ID: <3.0.5.16.19980718052115.24675724@pop3.kc.net>
Rendered body type: text/plain

Hopefully we will get off the ground this morning. APRS on 145.79 MHz.

73 de Don

---------- Forwarded message ----------
Date: Fri Jul 17 22:13:37 1998 CDT
From: "Jerry-C@Net-Lab International" <jerryc@netlab.org>
To: donp@netlab.org
Subject: Habitat Balloon Launch July 18

Habitat Balloon Launch at 7:30AM CST July 18
>From Gardner Kansas
telnet to netlab.org
connect guest (or with your login)
@join don
Global positioning data from 10 miles high can be viewed there.

514. Re: [APRSSIG:26332] Tools

From: Brian <bbarnhart@sun-link.com>
Date: Sat, 18 Jul 1998 08:36:15 -0400
To: dwetzel@earthlink.net
Cc: aprssig@tapr.org
Message-ID: <35B096BF.A2356395@sun-link.com>
Rendered body type: text/plain

I marked the outline of the hole unto the material, then drilled
multiple holes inside the outline. I then shaped the metal with my B&D
detailing tool using a Dremel high speed shaping cutter. I think it is
Dremel Cat. No. 191 or 194. Works great but certainly not a mass
production technique. If only I'd taken pictures as I built my
tracker...

Doug Wetzel wrote:
>
> Slightly off subject, but related to tracker construction...
>
> Anyone know of a tool that will punch a DB25 or DB9 size and shape hole in
> plastic or light metal?
>
> TIA
>
> Doug Wetzel
> K7IP
> Seattle APRS Coordinator
> 47 38 00N 122 20 29W
> ICQ 164635
>
> dwetzel@earthlink.net
>
> http://home.earthlink.net/~dwetzel

--
  Brian (N3VNX)   Freedom in our own time!
    bbarnhart@sun-link.com   N3VNX@KB3BLS.#SCPA.PA.USA.NOAM

515. HELP

From: k4wam@juno.com (bill mckay)
Date: Sat, 18 Jul 1998 10:25:03 -0400
To: aprssig@tapr.org
Message-ID: <19980718.102611.5903.1.k4wam@juno.com>
Rendered body type: text/plain

I have an Epson Apex Color Monitor that is wired for a nine pin video
card. I would like to know if I can use this monitor with a 15 pin Video
card and where can I find the pin out ?

73 de Bill
k4wam@qsl.net
Page@704.810.7951

--

_____
You don't need to buy Internet access to use free Internet e-mail.
Get completely free e-mail from Juno at http://www.juno.com
Or call Juno at (800) 654-JUNO [654-5866]

516. Tracker websites/pictures

From: Nick <nick_k@geocities.com>
Date: Sat, 18 Jul 1998 11:20:49 -0400
To: APRSSIG <aprssig@tapr.org>
Message-ID: <35B0BD51.9D304A91@geocities.com>
Rendered body type: text/plain

Does anyone know of any websites that would have pictures or a
documented construction of a compact tracker?

Thanks, 73,
Nick KF4BYA

nick_k@geocities.com
www.qsl.net/lmars/
--
ICQ# 12966558
Page me at: http://wwp.mirabilis.com/12966558

517. Re: [APRSSIG:26296] Data Interface Device (fixed subject)

From: Bob Merchant <KB8AST@mwweb.com>
Date: Sat, 18 Jul 1998 11:33:01 -0400
To: dvanhorn@cedar.net, aprssig@tapr.org,
Bob Bruninga <bruninga@nadn.navy.mil>
Message-ID: <3.0.5.32.19980718113301.007c6730@MAIL.mwweb.com>
Rendered body type: text/plain

Hi Dave, I am seeing a lot of possible applications for your DID as page
after page of SIG comments go by. What is the possibility of a beta device?
If we could get an operating device into the hands of the APRS authors,
maybe they/we could implement some option modification which would permit
the DID to function as the multi-port interface we originally envisioned.

At 04:19 PM 7/16/98 -0500, you wrote:
>
>So: As it sits in brane and breadboard, here's the device.
>
>One "master" port to communicate to the PC, 115200 or as fast as possible
>
>Four ports to start with, more can be added, (mechanism unclear, ask again
>later)
>Max of 8 ports.
>
>Each port has ground, TXD, RXD, and two handshake lines, plus an optional
>line
>that can carry nothing, +12V (cleaned up) or the output of a settable
>regulator.
>The reg can be set to 5V or 7V (more options are cheap, but nobody's
>mentioned
>needing more) The reg max output will be around 1A.
>
>Each port can be configured for hardware, Xon/Xoff, or no handshake.
>Each port can be configured for baud rate.
>Each port has a small bi-directional buffer.
>
>Each connected device will "see" a transparent link to APRS. Nothing added,
>nothing changed.
>
>APRS will have to meet me in the middle somewhere with a communication
>format that isn't too hard to work with.
>
>Hopefully, there will be no lost data. If the connected devices don't honor
>any handshaking, then there might be problems, a lot will depend on how
>fast the link between me and APRS is able to run. Obviously it's a finite
>bandwidth, and you can only stuff so much down a given pipe before
>something spills.
>
 I guess the solution to the data rate is a faster computer....

 I know the WX station I am running doesn't honor any handshaking, nor does
the
GPS unit. I can control the output of the GPS unit so it doesn't spill it's
data
95 times a second. It is possible to set the data dump to 30 seconds, 1
minute,
or 5 minutes. In a car, that is more than sufficient for tracking the vehicle.
I don't know about the rest of the stuff mentioned on this SIG, be it either a
ham device or commercial. We would have to get some feedback from the
operators
of the device to see if it utilizes any handshaking protocol...I'm going to
guess you are going to be handling most of the transmissions "on the fly"..
without any "stop the data" abilities, with the exception of the tnc's or
something designed to work as a RS-232/232C device.

>Total cost, don't know yet, a lot depends on packaging, but certainly less
>than anything else that lets you get 8 com ports on one int!
>
...I wonder if KANTRONICS has some spare extruded aluminum tnc/PCB holders we
could package the original experimental device in??
73, de Bob,
KB8AST@mwweb.com
KB8AST@KB8AST.#NEOH.OH.USA.NOAM

http://www.mwweb.com/kb8ast/kb8ast.htm
APRS approx. co-ord's: 4143.82N/08109.50W

518. Re: [APRSSIG:26360] Tracker websites/pictures

From: "Michael Malloy" <malloy@execpc.com>
Date: Sat, 18 Jul 1998 11:33:21 -0500
To: <aprssig@tapr.org>, <nick_k@geocities.com>
Cc: "Gary Bargholz" <N9UUR@execpc.com>
Message-ID: <01bdb269$c6bb0f20$2c80cfa9@m-m>
Rendered body type: text/plain

Check Out this site.

N9UUR@execpc.com

I have seen this in operation. All you need to add is a radio. Works great.

Mike N9WJV

-----Original Message-----
From: Nick <nick_k@geocities.com>
To: aprssig@tapr.org <aprssig@tapr.org>
Date: Saturday, July 18, 1998 10:44 AM
Subject: [APRSSIG:26360] Tracker websites/pictures

>Does anyone know of any websites that would have pictures or a
>documented construction of a compact tracker?
>
>Thanks, 73,
>Nick KF4BYA
>nick_k@geocities.com
>www.qsl.net/lmars/
>--
>ICQ# 12966558
>Page me at: http://wwp.mirabilis.com/12966558
>

519. Re: [APRSSIG:26330] Re: detector

From: John Rauch <johnr@cycat.com>
Date: Sat, 18 Jul 1998 15:07:32 -0400
To: bruninga@nadn.navy.mil, APRSSIG@tapr.org
Message-ID: <35B0F273.EF97F29@cycat.com>
Rendered body type: text/plain

Bob,,,, get real!!! In central Florida it is not uncommon for a
thunderstorm to have 30 "strikes" within 15 seconds!! Are you sure you
want to have several stations trying to transmit this type of data
(volume) and to sync them, as a front will often have a strike range
line of up to 30 miles!

John, N4YXS
[Attachment: vcard.vcf; text/x-vcard; 227 bytes]

520. Data interface

From: kd4emi@juno.com (Michael A Kantor)
Date: Sat, 18 Jul 1998 12:38:20 -0400
To: aprssig@tapr.org
Message-ID: <19980718.150439.3606.0.kd4emi@juno.com>
Rendered body type: text/plain

A data interface device is a great idea, but
everything that we play with has different syntax, etc.

Thats why I like a stamp to "convert" data into readable form.
Also I have played with single board computer and they are quite neat
too.

Too bad they still dont make the Timex Sinclair -- I used to play chess
on that
thing ! Easy to program and had I/O routines already in eeprom. They
were small,
and cheap !

With the advent of <$50 8088 machines (even 286 and 386 can be had <$100)
that have lots of space for ports, software control of these device is
the future.

There is only so much that eeproms can do. I am leaning to really trying

to learn 8088
assembler and writing some basic text stuff to handle these devices.
Mike

_____
You don't need to buy Internet access to use free Internet e-mail.
Get completely free e-mail from Juno at http://www.juno.com
Or call Juno at (800) 654-JUNO [654-5866]

521. Re: [APRSSIG:26363] Re: detector

From: assib@imap1.asu.edu
Date: Sat, 18 Jul 1998 12:30:55 -0700 (MST)
To: John Rauch <johnr@cycat.com>
Cc: aprssig@tapr.org
Message-ID: <Pine.GSO.3.96.980718122808.8386A-100000@email1.asu.edu>
Rendered body type: text/plain

Hi,
I think that if a cluster of lightning detection stations transmit the time
and strength of each hit, then pretty good analysis could be done for the
place of hit. This is assuming that the strength indicators are calibrated
with each other.
bye, Assi

     Assi Friedman, 4X1KX/KK7KX Arizona State University
                "The Truth Is Out There"
Tel: 602-844-1458 (home)
Tel: 602-965-2474 (ASUsat lab)
Fax: 602-965-0277 (ASUsat lab)
Email: assib@asu.edu
Home Page: http://www.public.asu.edu/~assib
ASUSat Page: http://www.eas.asu.edu/~nasasg/asusat/asusat.html
---

522. Re: GPS Test

From: Cap Pennell <cap@cruzio.com>
Date: Sat, 18 Jul 1998 12:39:21 -0700
To: aprssig@tapr.org
Message-ID: <3.0.5.32.19980718123921.008845e0@mail.cruzio.com>
Rendered body type: text/plain

On AMTRAK's Coast Starlight train (in May), I got good results from a AMTRAK "coach car" window with an external amplified antenna also. "Half of the sky" seemed to be enough. Holding the antenna in position was the only tricky part. I hooked the HT's belt clip over the lip at the bottom of the train window, and then wedged the GPS antenna between the HT and the window. A gel cell powered the TNC, GPS, and produced 5 watts out of the HT's rubber duck (without apparent problems for the GPS).
73, Cap KE6AFE

At 08:45 AM 7/16/98 -0500, Wally Foster wrote:
>When I ran my GPS II+ on a commercial flight, I wedged the external
>amplified antenna between the window and the window shade.. Worked great
>at 350 KPH and 37,000 ft..
>Wally N6CDJ
--

Cap Pennell
Santa Cruz, CA 95062-1002   3658.93N/12200.91W [CM86xx]
email: cap@cruzio.com   home page: http://members.cruzio.com/~cap
packet radio: KE6AFE @ki6eh.#wcca.ca.usa.noam

523. Re: detector

From: kd4emi@juno.com (Michael A Kantor)
Date: Sat, 18 Jul 1998 16:49:35 -0400
To: johnr@cycat.com
Cc: aprssig@tapr.org
Message-ID: <19980718.164936.3646.1.kd4emi@juno.com>
Rendered body type: text/plain

On Sat, 18 Jul 1998 14:09:51 -0500 (CDT) John Rauch <johnr@cycat.com>
writes:
>
>Bob,,,, get real!!!   In central Florida it is not uncommon for a
>thunderstorm to have 30 "strikes" within 15 seconds!!   Are you sure
>you
>want to have several stations trying to transmit this type of data
>(volume) and to sync them, as a front will often have a strike range
>line of up to 30 miles!
>
>John, N4YXS

A good argument for coordination... And this brings up good points..here
is my defense, and what I have been working on...
BTW John no one is more concerned about "volume" and overcrowding than me
!
I assure you...ask Steve about his DGPS thing and the slugs we had about
that)
During a T storm event, dozens of "strikes" can occur. The program will
not send out these strikes ..The program will only detect the strikes,
within a range, and send a "alarm" text every few minutes for 1 hour.
Thats it. To send dozens on posits on strikes might seem interesting but
not functional. Other thoughts Ive had is an averaging function and
threshold function. The system can pinpoint location, therefore be
programed to send a msg to a "county" as an alert.   Here is a few
scenarios:

T S = (thunderstorm)
TS in county south of me. Alert sent to that county. TS North of me,
alert sent to that county. TS near me. Alert sent to my county.

TS all over- threshold limit exceeded alert

I understand that WIN APRS has county option already available, and SA+
has strings that can be programmed. SO if you use winaprs no problem, if
you use sa+ you set up the search string with a agreed upon string. When
you detect the string, you initiate the alert wav file.
For dos aprs I have no clue, as I havent used it for a couple of years.
(although the best feature about it is the alternate unproto paths by %
which is cool--I like that feature, but still prefer the windows OS and
maps.)
The concerns you mentioned have been considered already and development
of a
good system is ongoing.
The fact that this new detector can give positions may work better than
the previous detector that only gave range, but I invite comment..
Mike KD4EMI@JUNO.COM

_____
You don't need to buy Internet access to use free Internet e-mail.
Get completely free e-mail from Juno at http://www.juno.com
Or call Juno at (800) 654-JUNO [654-5866]

524. Garmin GPS 30

From: "Stephen A. King" <sking1@ix.netcom.com>
Date: Sat, 18 Jul 1998 14:25:03 -0700
To: "aprssig@tapr.org" <aprssig@tapr.org>
Message-ID: <35B112AF.63183D70@ix.netcom.com>
Rendered body type: text/plain

Does anyone have the the web address to or a copy of the "fixes" for
the Garmin GPS 30 units, told how to check certain connections for a
"cold solder" problem. They used to be posted on the KCAPRS web site,
but are no longer there. Any and all help is certainly appreciated.

Please respond to my e-mail address.

Steve

525. To MIM & Trackers...

From: n0lrf@ott.net (Paul Stump)
Date: Sat, 18 Jul 1998 23:26:13 GMT
To: aprssig@tapr.org
Message-ID: <35b12e76.858889@mail.ott.net>
Rendered body type: text/plain

Gents,

Please check out my GPSpage at:

http://www.ott.net/~n0lrf/gpspage.htm

for ideas for MIM trackers. They work great.

Cheers,

Paul
Ottawa, KS, USA
n0lrf@ott.net

http://www.ott.net/~n0lrf/

526. RE: [APRSSIG:26365] Re: detector

From: "Demos Doulou" <ddoulou@gte.net>
Date: Sat, 18 Jul 1998 19:36:39 -0400
To: <aprssig@tapr.org>
Message-ID: <002e01bdb2a4$e996d980$2bf4ffd0@wingate>
Rendered body type: text/plain

Why all this trouble with lightning detection. Just go and buy a Boltec and be done with it. It has a 300 mile coverage and is fairly accurate on position detection. I believe they are around 400 bucks. If you cant afford that and live in Florida, Look at the St Pete times web page http://www.sptimes.com. They have a Boltec on the web that is updated at 10 minute intervals and covers the entire state. It is also injected in the EMWIN stream both on the local transmitter on 139.210 Mhz and in the national EMWIN feed.

73

Demos Doulou KR4US
Pinellas Cty, Florida
 ACS Radio Officer
kr4us@amsat.org
ddoulou@gte.net

> -----Original Message-----
> From: aprssig@tapr.org [mailto:aprssig@tapr.org]On Behalf Of
> assib@imap1.asu.edu
> Sent: Saturday, July 18, 1998 3:33 PM
> To: aprssig@tapr.org
> Subject: [APRSSIG:26365] Re: detector
>
>
> Hi,
> I think that if a cluster of lightning detection stations
> transmit the time
> and strength of each hit, then pretty good analysis could be done for the
> place of hit. This is assuming that the strength indicators are calibrated
> with each other.
> bye, Assi
>

527. APRS2.2 16 or 32?

From: AB <abrookes@sympatico.ca>
Date: Sat, 18 Jul 1998 20:53:26 -0400
To: aprssig@tapr.org
Message-ID: <35B14386.3E33@sympatico.ca>
Rendered body type: text/plain

Is WinAPRS 2.2.0 a 16 or 32 app??

Adrian, VE3RHK

528. Re: [APRSSIG:26341] Pico Packet (2-serial port) problems with a Macintosh

From: Jon Ogden <jono@enteract.com>
Date: Sat, 18 Jul 98 20:09:30 -0500
To: <tapr@kq4tv.aprs.net>, <aprssig@tapr.org>
Message-ID: <199807190101.UAA13956@tapr.org>
Rendered body type: text/plain

>I have a Pico Packet (2-serial port) that I have used with my Macintosh
>laptop for about 2 months. Everything worked fine until one day the CPU
>and 2nd serial port board decided they had had enough and commited
>suicide. I sent the unit back to the factory to be repaired. When I got
>it back it worked fine for about two weeks and then quit communicating
>with my Macintosh. I tested the Pico and it communicates with my Newton
>and my PC laptop. I took the pico apart and jumpered the reset jumper for
>a few hours and put things back together and lo it worked again, for
>about an hour, and then no communications with the Mac.
>

Did you think there could be something wrong with your Mac? If it communicates with the Newton, it should communicate with the Mac. They have exactly the same serial interface. Also, be sure that you haven't turned Apple Talk on on the particular serial port you wish to use.

>Is there an adjustment that can be made in the pico to make it
>communicate reliably with a Macintosh or do I need to send it back to the
>factory again.

If it communicates with one device it should communicate with any. Just
make sure baud rates, etc. are correct.

73,

Jon
KE9NA

Jon Ogden
KE9NA

http://www.qsl.net/ke9na

"A life lived in fear is a life half lived."

529. Re: [APRSSIG:26343] Re: Pico Packet (2-serial port) problems with a Macintosh

From: Jon Ogden <jono@enteract.com>
Date: Sat, 18 Jul 98 20:10:41 -0500
To: <wa8inz@airnet.net>, <aprssig@tapr.org>
Message-ID: <199807190102.UAA14028@tapr.org>
Rendered body type: text/plain

>Bruce you will have this problem forever. I know I will get some flack for
>this from some but I have had two of those and unless you get a rare bird
>that works good for the most part most everyone that has a PicoPacket has had
>problems with. It's really a shame. Send it back untill it's right, I did
>this with both of mine several times and they never where right.
>
>Ok Pico owners start firing away.

Bill's got a good point! It is frustrating to have these problems. My
big gottcha is still the horrendous RFI that comes out of the 2nd serial
port. Oh well, it works pretty good though.

73,

Jon
KE9NA

Jon Ogden
KE9NA

http://www.qsl.net/ke9na

"A life lived in fear is a life half lived."

530. RE: [APRSSIG:26373] Re: Pico Packet (2-serial port) problems with a Macintosh

From: "Jerry Rector" <jerryr@gate.net>
Date: Sat, 18 Jul 1998 21:39:03 -0400
To: <jono@enteract.com>
Cc: <aprssig@tapr.org>
Message-ID: <199807190138.VAA200946@osage.gate.net>
Rendered body type: text/plain

>It is frustrating to have these problems. My
>big gottcha is still the horrendous RFI that
>comes out of the 2nd serial port.
>Oh well, it works pretty good though.
>
>73,
>
>Jon
>KE9NA

  I was able to almost totally eliminate the 2nd
  serial port RFI by installing miniature ferrite beads
  on each lead (TX/RX/SG) directly at the plug as

it exits the TNC.
Works great now!

Jerry, KB4OAM
mailto:jerryr@gate.net
http://members.tripod.com/~kb4oam

531. Re: [APRSSIG:26362] Re: Tracker websites/pictures

From: Brian <bbarnhart@sun-link.com>
Date: Sat, 18 Jul 1998 23:22:53 -0400
To: aprssig@tapr.org
Message-ID: <35B1668D.E741F86B@sun-link.com>
Rendered body type: text/plain

Which should translate to http://www.execpc.com/~n9uur/

Michael Malloy wrote:
>
> Check Out this site.
>
> N9UUR@execpc.com
>
> I have seen this in operation. All you need to add is a radio. Works great.

--
Brian (N3VNX) Freedom in our own time!
bbarnhart@sun-link.com N3VNX@KB3BLS.#SCPA.PA.USA.NOAM
http://www.netrax.net/~bbarnhart

532. Precision Mapping

From: Earl Needham <kd5xb@amsat.org>
Date: Sat, 18 Jul 1998 21:37:17 -0600
To: aprssig@tapr.org
Message-ID: <3.0.3.32.19980718213717.009b8a60@mail.pdrpip.com>
Rendered body type: text/plain

Got my Precision Mapping CD today, and it works beautifully. I've had
WinAPRS 2.2.0 and the OCX installed since 2.2.0 became available, wish I
hadn't waited so long to buy the CD.

Earl

Earl Needham, KD5XB mailto:KD5XB@AMSAT.ORG
Clovis, New Mexico DM84 N34.403 W103.334
Registered: APRS/DOS & WinAPRS

533. Re: [APRSSIG:26371] APRS2.2 16 or 32?

From: Wes Johnston <kd4rdb@eagnet.com>
Date: Sat, 18 Jul 1998 23:39:48 -0400
To: abrookes@sympatico.ca, aprssig@tapr.org
Message-ID: <3.0.32.19980718233947.00729498@gena>
Rendered body type: text/plain

32 bit app.... see http://www.qsl.net/kd4rdb/aprs.htm for links to the 32s
programs for win3.11 if you want to run winaprs on a win3.11 machine.

At 07:55 PM 7/18/98 -0500, you wrote:
>Is WinAPRS 2.2.0 a 16 or 32 app??
>
>Adrian, VE3RHK
>
>
Wes
Email: mailto:kd4rdb@usa.net
APRS: http://www.qsl.net/kd4rdb/aprs.htm

CAMPER FOR SALE: http://www.qsl.net/kd4rdb/camper.htm

A good traveler has no fixed plans and is not intent on arriving.

534. D punches

From: "David VanHorn" <dvanhorn@cedar.net>
Date: Sat, 18 Jul 1998 23:40:24 -0500
To: <aprssig@tapr.org>
Message-ID: <009801bdb2cf$600a3ce0$3cf135ce@xenu>
Rendered body type: text/plain

My Techni-Tools catalog, (not known for low prices) has 9 pin and 25 pin D
punches for $163.
There is also another version for $357, but it is not clear to me at all
what if any difference
there is. Page 98 of catalog 64, 1-800 832-4866

535. Re: Pico Packet (2-serial port) problems with a Macintosh

From: "Bruce W. Martin" <tapr@kq4tv.aprs.net>
Date: Sun, 19 Jul 1998 00:30:16 -0500
To: "Jon Ogden" <jono@enteract.com>, "aprssig" <aprssig@tapr.org>
Message-ID: <199807190532.AAA05950@ci991337-a.nash1.tn.home.com>
Rendered body type: text/plain

Jon Ogden (jono@enteract.com) on 7/18/98 8:09 PM wrote:

>
>Did you think there could be something wrong with your Mac? If it
>communicates with the Newton, it should communicate with the Mac. They
>have exactly the same serial interface. Also, be sure that you haven't
>turned Apple Talk on on the particular serial port you wish to use.
>
I guess I should have mentioned that I tested the Mac with a KPC-3 and
SUpra Modem and it communicates with those devices just fine. I think
there is probably some voltage threshold adjustment that might be done to
make things work. BTW the problem is not just with my notebook Mac it is
with any Mac.

>
>If it communicates with one device it should communicate with any. Just
>make sure baud rates, etc. are correct.
>
Yes it should, but it doesn't.

Bruce

--
 Bruce W. Martin   Grid: EM66QE
 HAM Call: KQ4TV   APRS: 3610.50N/08635.50W
  the other half of the NT4L rover team
 URLs: http://kq4tv.aprs.net/
       NT4L Rover Operations Page:
        http://kq4tv.aprs.net/vhf/vhf.html

536. Fw: [APRSSIG:26371] APRS2.2 16 or 32?

From: "schiers" <schiers@netins.net>
Date: Sun, 19 Jul 1998 06:30:25 -0500
To: <aprssig@tapr.org>
Message-ID: <00fa01bdb308$a0bea1c0$8d178ea7@schiers.netins.net>
Rendered body type: text/plain

---
hasan schiers

N0AN

-----Original Message-----
From: schiers <schiers@netins.net>
To: abrookes@sympatico.ca <abrookes@sympatico.ca>
Date: Sunday, July 19, 1998 6:29 AM
Subject: Re: [APRSSIG:26371] APRS2.2 16 or 32?

>32 bit
>
>If you want to run it under Win 3.x, you need the Win32s extensions.
>
>I would HIGHLY recommend if you are going to run WinAPRS at home, you
>upgrade your system as necessary to run Win98 and not bother with the
Win32s
>extensions for Win3.x.
>
>For those of you still running Win95, again, I recommend upgrading to
>Win98...it is considerably faster running all apps I have tested,
especially
>screen updates, which are commonly required for WinAPRS.
>
>I have had no crashes of the OS since upgrading to '98....I got crashes a
>couple times a week with Win95a. (System hangs, not WinAPRS crashes).
>

>Of course, depending on your MB, hardware etc., your mileage may vary. I
>have upgraded 3 machines so far and they all showed the same improvement.
73
>
>---------------------
>hasan schiers
>
>N0AN
>
>-----Original Message-----
>From: AB <abrookes@sympatico.ca>
>To: aprssig@tapr.org <aprssig@tapr.org>
>Date: Saturday, July 18, 1998 8:02 PM
>Subject: [APRSSIG:26371] APRS2.2 16 or 32?
>
>
>>Is WinAPRS 2.2.0 a 16 or 32 app??
>>
>>Adrian, VE3RHK
>>
>

537. Re: [APRSSIG:26275] Porta-Digi in caving

From: kd4gnx@juno.com (Richard E Jones)
Date: Sat, 18 Jul 1998 05:19:25 -0400
To: aprssig@tapr.org
Message-ID: <19980719.073912.-4065643.8.kd4gnx@juno.com>
Rendered body type: text/plain

Bill, and the Sig,
One thought, as being involved with the local fire/rescue, Our guys have talked about commercial radio use underground. When they were talking about comms, I chimed in with amateur radio (a couple of them are hams) which they replied about integrity of the battery life at any given time. Their feeling is that a telephone pair would be more reliable in that underground they aren't sure how far they will travel and hard to track on the surface. These guys have a several thousand feet of wire, they have also considered the abrasion factor, breaks? just strip and twist. Not only do they do rescue, but are in spelunker clubs (mismatched freqs.) The clubs all seem to lean towards field type phone systems, lightweight, cheap, easily repaired. Some conversations I've heard, they "go deep" and take the essentials they need

   Sport caving... the guys have talked about being underground for about as long as they can stand it or the batteries hold out. With a wired system, the battery is on the outside, all you have to carry is a modified telephone handset with alligator clips and you can connect anywhere on the line, this goes for rescue aspect also.

   Rescue on the other hand they have to take in stokes baskets and other EMS supplies. They tend to travel kind a light and fast in that respect. Given that laptops are getting a little smaller, but the weight is still there. I don't know the specs of your portable digi, but am guessing several in conjunction with a laptop might weigh them down. Time is of the essence, Hence the EMS TERM >GOLDEN HOUR. < You don't know how long they have been in, type/nature of injuries, its grab the basics plus a few and GO!
Laptop/digi, I have no doubt that it's the BEST communication, (U type and send, letter for letter, word for word, pretty much cut and dried) hard to MIS-communicate this way. One other thing to consider is that some cavers are slightly out a plumb as to how/where they are going, climbing up/down crawling through very TIGHT places and in water.

Now, I'm not saying this is wrong or discounting the multi uses of your system, I think its a superb project, VERY well thought out and assembled, the possibilities are limited only by the imagination, and of using it underground, I might be wrong, it might solve someones comm problem or they can improve upon it. You'll have to "market" the idea of underground usage, with all the great thinkers/minds on the sig, someone will have a different approach to it. Major kudos Bill.

Bill, Sig, take care.
Hams in Fl, from what I have read, you all done real good!!!
Congratulations to you all!

73 from Richard
!3802.98n/08444.54w
First registered APRS user in the Bluegrass State / Dayton '94
Versailles, KY. Now on 144.390

On Wed, 15 Jul 1998 16:06:15 -0500 (CDT) William Nolle
<wa8inz@airnet.net> writes:
>I was just tossing around an idea that Bob B had posted some
>time ago on APRS in caving.
<sniped stuff>

538. New at W1ON-2 Boston GATEway

From: w1eo@w1eo.ampr.org ("DoC" Dave Willard)
Date: Sun, 19 Jul 98 11:51:30 UTC
To: aprssig%tapr.org@switch.woonri
Message-ID: <22484@w1eo.ampr.org>
Rendered body type: text/plain

I just added a new function to the W1ON-3 APRS GATEway in Bedford, MA.
If you send a ?APRSD query message to W1ON-3 (on either 144.39 or 10.151 Mhz)
it will respond with a list of callsigns heard directly on that frequency
and the best DX (heard directly) on both frequencies.

Other functions at the GATEway;

It accepts NTS traffic now and will reformat it and forward it
on the AX.25 network. Please limit the text to 5 lines and use
the APRS NTS generation feature - sending to W1ON-3.

An ?APRSP query message addressed to W1ON-3 will generate a response
with the GATEway's positional report plus a one line message to your
station giving the range and distance from your station to W1ON-3.

All response messages from W1ON-3 use a digi string that is just the
reverse of that received in the query message.

The daily APRS heard bulletin on the AX.25 network now contains
a line of the best DX and the peak hour baud rate for each frequency
for the last reporting period.

73 DoC, W1EO@switch.bedford.ampr.org
sysop @ w1on.ma.usa.noam, switch.bedford [44.56.4.1] and Boston APRS GATEway.
Data provider to NADSD-TAPR for New England (CT,NH,MA,ME,RI,VT)

539. MapBlast

From: Kelly Jordan <kjordan@compuserve.com>
Date: Sun, 19 Jul 1998 09:54:16 -0400
To: Blind.Copy.Receiver@compuserve.com
Message-ID: <199807190954_MC2-5388-E76E@compuserve.com>
Rendered body type: text/plain

Does anybody know if there is a way to get to the data that is used
at MapBlast for their mapping information they use for Canada?

If only Delorme did Canada - sigh!

- Kelly VE3OTK

540. Re: Pico Packet (2-serial port) problems with a Macintosh

From: Jon Ogden <jono@enteract.com>
Date: Sun, 19 Jul 98 09:26:12 -0500
To: "Bruce W. Martin" <tapr@kq4tv.aprs.net>, "aprssig" <aprssig@tapr.org>
Message-ID: <199807191418.JAA24851@tapr.org>
Rendered body type: text/plain

>I guess I should have mentioned that I tested the Mac with a KPC-3 and
>SUpra Modem and it communicates with those devices just fine. I think
>there is probably some voltage threshold adjustment that might be done to
>make things work. BTW the problem is not just with my notebook Mac it is
>with any Mac.
>
>>
>>If it communicates with one device it should communicate with any. Just
>>make sure baud rates, etc. are correct.
>>
>Yes it should, but it doesn't.

Odd.....

Send it back to the factory and make them fix it.

Sorry I can't be of more help.

73,

Jon
KE9NA

Jon Ogden
KE9NA

http://www.qsl.net/ke9na

"A life lived in fear is a life half lived."

541. Precision Mapping Source

From: "myrt webb" <mwwebb@cyberport.net>
Date: Sun, 19 Jul 1998 09:02:07 -0600
To: "APRSSIG" <aprssig@tapr.org>
Message-ID: <01bdb326$32e5ebe0$716f88d0@mwwebb.cyberport.net>
Rendered body type: text/plain

What is a good source for the Precision Mapping CD's??

542. MacAPRS 3.2.0

From: Jon Ogden <jono@enteract.com>
Date: Sun, 19 Jul 98 11:09:33 -0500
To: <aprssig@tapr.org>
Message-ID: <199807191601.LAA28461@tapr.org>
Rendered body type: text/plain

Hi all,

I've been having a couple of recurring errors when using MacAPRS 3.2.0.
The two main ones I get are: "Failed to Allocate Screen Array" and
"Segment Loader Error." The error numbers that come to mind are 15 and
22 respectively I think.

It's incredibly annoying to be out tracking around all day and when you
get home either have your machine all locked up or when you double click
an icon, the program crashes and you get one of these errors.

Anybody got any ideas on these? I've told the Sprouls but got no
response back.

And secondly, can we mount a petition to be able to change what the
default display parameters are. I HATE the fact that course and speed
vectors are automatically displayed. They clutter up the map. I don't
want them; I don't use them and I want to be able to change the defaults
so they don't come up. Can we please be able to change the default
display settings (all of them)?

73,

Jon
KE9NA

Jon Ogden
KE9NA

http://www.qsl.net/ke9na

"A life lived in fear is a life half lived."

543. Re: [APRSSIG:26371] APRS2.2 16 or 32?

From: AB <abrookes@sympatico.ca>
Date: Sun, 19 Jul 1998 12:08:01 -0400
To: schiers <schiers@netins.net>
Cc: aprssig@tapr.org
Message-ID: <35B219E1.7307@sympatico.ca>
Rendered body type: text/plain

Thanks for the info, WinAPRS runs fine on the desktop
under 95, but the old laptop running 3.1 doesn't have
a disk drive that works (not paying $500 for a

NEC replacement), so I was hoping to find some way
of getting Win32S into the machine through the
modem, but all attempts to install from hard drive
have failed.

818 (APRS DOS) runs fine though!

Cheers, Adrian

VE3RHK

544. KAM & WinAPRS

From: AB <abrookes@sympatico.ca>
Date: Sun, 19 Jul 1998 12:15:08 -0400
To: aprssig@tapr.org
Message-ID: <35B21B8C.30E0@sympatico.ca>
Rendered body type: text/plain

My older KAM (2.84 firmware) seems to be working well
with APRS818 (DOS), but all attempts to run with
WinAPRS (2.2.0) have failed. I've tried all the KAM
settings, Dual Port, Two Port, exit from KAM Host Mode,
etc., and various TNC configurations, but I cannot
see anyone popup on the map.

In DOS, I get a nice handfull of stations correctly
located after just a couple of minutes at most.

Any suggestions?

73 Adrian, VE3RHK

545. Re: [APRSSIG:26385] Precision Mapping Source

From: Earl Needham <kd5xb@amsat.org>
Date: Sun, 19 Jul 1998 10:29:26 -0600
To: mwwebb@cyberport.net, aprssig@tapr.org
Message-ID: <3.0.3.32.19980719102926.00b8d4a0@mail.pdrpip.com>
Rendered body type: text/plain

At 10:09 AM 7/19/98 -0500, myrt webb wrote:
>What is a good source for the Precision Mapping CD's??

        I got mine from T-Soft at 800-345-6314 for $19.95 plus $7 shipping.
Showed up in about a week's time.

        7 3
        Earl

Earl Needham, KD5XB   mailto:KD5XB@AMSAT.ORG
Clovis, New Mexico   DM84 N34.403 W103.334
Registered: APRS/DOS & WinAPRS

546. Re: [APRSSIG:26386] MacAPRS 3.2.0

From: kb9dgb <kb9dgb@clarc.org>
Date: Sun, 19 Jul 98 11:44:54 -0500
To: <jono@enteract.com>, <aprssig@tapr.org>
Message-ID: <199807191638.LAA13315@efd.gw.clarc.org>
Rendered body type: text/plain

>Hi all,
>
>I've been having a couple of recurring errors when using MacAPRS 3.2.0.
>The two main ones I get are: "Failed to Allocate Screen Array" and
>"Segment Loader Error." The error numbers that come to mind are 15 and
>22 respectively I think.
>
>It's incredibly annoying to be out tracking around all day and when you
>get home either have your machine all locked up or when you double click
>an icon, the program crashes and you get one of these errors.
>
>Anybody got any ideas on these? I've told the Sprouls but got no
>response back.
>
>And secondly, can we mount a petition to be able to change what the
>default display parameters are. I HATE the fact that course and speed
>vectors are automatically displayed. They clutter up the map. I don't

>want them; I don't use them and I want to be able to change the defaults
>so they don't come up. Can we please be able to change the default
>display settings (all of them)?
I suspect that you have an extensions conflict. As to which one is
causing the problem, your guess is as good as mine. Try turning off some
extensions and see what happens. I am running the same version, and have
not had any problems. Oh, I did have to increase the memory allocated to
it though.

Tim Firkowski KB9DGB
President
Clear Lake Amateur Radio Club
www.clarc.org
kb9dgb@clarc.org

547. Mac Precision mapping

From: Tim Firkowski <kb9dgb@phoenix.net>
Date: Sun, 19 Jul 98 11:50:29 -0500
To: "TAPRSIG" <aprssig@tapr.org>
Message-ID: <199807191646.LAA03771@voyager.c-com.net>
Rendered body type: text/plain

Has anyone heard yet about the release of Precision Mapping for the Mac?
I talked to Keith Sproul at Dayton and they were still negotiating with
some mapping companies.

Tim Firkowski KB9DGB
President
Clear Lake Amateur Radio Club
www.clarc.org
kb9dgb@clarc.org

548. County Maps for Storm Warnings

From: Earl Needham <kd5xb@amsat.org>
Date: Sun, 19 Jul 1998 11:39:28 -0600
To: aprssig@tapr.org
Message-ID: <3.0.3.32.19980719113928.00862bf0@mail.pdrpip.com>
Rendered body type: text/plain

This morning, I downloaded all (yes, ALL) the county maps for storm
warnings for WinAPRS. It took me a while, because each state is separate,
making 51 files to download.

        When I unzipped all the files, most maps went into separate state folders.
 Is this where they're supposed to go? However, I noticed a few, about a
dozen, went directly into the counties folder. I manually moved these to
the state folders.

        I have since zipped all the map files into a new .zip file. I've also
made an executable that will build the counties folder for WinAPRS.

        Is there an FTP site I might upload this file to, so it's easy for others
to benefit from it?

        7 3
        Earl

Earl Needham, KD5XB   mailto:KD5XB@AMSAT.ORG
Clovis, New Mexico   DM84 N34.403 W103.334
Registered: APRS/DOS & WinAPRS

549. Re: [APRSSIG:26388] KAM & WinAPRS

From: Kevin Kelly <kkelly@radix.net>
Date: Sun, 19 Jul 1998 14:12:08 -0400
To: abrookes@sympatico.ca
Cc: aprssig@tapr.org
Message-ID: <35B236F8.7DEDD589@radix.net>
Rendered body type: text/plain

Greetings SIG:

I am running WinAPRS version (2.2.0 with Prec Map) and an old Kam
version (5.01). No problems here.

73,
Kevin Kelly/N6QAB
kkelly@radix.net]

AB wrote:

> My older KAM (2.84 firmware) seems to be working well
> with APRS818 (DOS), but all attempts to run with
> WinAPRS (2.2.0) have failed. I've tried all the KAM
> settings, Dual Port, Two Port, exit from KAM Host Mode,
> etc., and various TNC configurations, but I cannot
> see anyone popup on the map.
>
> In DOS, I get a nice handfull of stations correctly
> located after just a couple of minutes at most.
>
> Any suggestions?
>
> 73 Adrian, VE3RHK
>

550. Re: [APRSSIG:26382] New at W1ON-2 Boston GATEway

From: kd4emi@juno.com (Michael A Kantor)
Date: Sun, 19 Jul 1998 10:01:45 -0400
To: w1eo@w1eo.ampr.org
Cc: aprssig@tapr.org
Message-ID: <19980719.141510.3630.0.kd4emi@juno.com>
Rendered body type: text/plain

How are you doing this ?
What software are you using ?
MIke

On Sun, 19 Jul 1998 07:04:46 -0500 (CDT) w1eo@w1eo.ampr.org ("DoC" Dave
Willard) writes:
>I just added a new function to the W1ON-3 APRS GATEway in Bedford, MA.
>If you send a ?APRSD query message to W1ON-3 (on either 144.39 or
>10.151 Mhz)
>it will respond with a list of callsigns heard directly on that
>frequency
>and the best DX (heard directly) on both frequencies.
>
>Other functions at the GATEway;
>
>   It accepts NTS traffic now and will reformat it and forward it
>   on the AX.25 network. Please limit the text to 5 lines and use
>   the APRS NTS generation feature - sending to W1ON-3.
>
>   An ?APRSP query message addressed to W1ON-3 will generate a
>response
>   with the GATEway's positional report plus a one line message
>to your
>   station giving the range and distance from your station to
>W1ON-3.
>
>   All response messages from W1ON-3 use a digi string that is
>just the
>   reverse of that received in the query message.
>
>   The daily APRS heard bulletin on the AX.25 network now
>contains
>   a line of the best DX and the peak hour baud rate for each
>frequency
>   for the last reporting period.
>
>73 DoC, W1EO@switch.bedford.ampr.org
>sysop @ w1on.ma.usa.noam, switch.bedford [44.56.4.1] and Boston APRS
>GATEway.
>Data provider to NADSD-TAPR for New England (CT,NH,MA,ME,RI,VT)
>
>

_____
You don't need to buy Internet access to use free Internet e-mail.
Get completely free e-mail from Juno at http://www.juno.com
Or call Juno at (800) 654-JUNO [654-5866]

551. Tracking stations?

From: Earl Needham <kd5xb@amsat.org>
Date: Sun, 19 Jul 1998 12:23:22 -0600

To: aprssig@tapr.org
Message-ID: <3.0.3.32.19980719122322.00858a80@mail.pdrpip.com>
Rendered body type: text/plain

OK, I remember it was discussed some months ago, but I can't remember how
and I can't find the message explaining it.

        How do I make my map always center on a particular station in WinAPRS?

        Thanks...

        Earl

Earl Needham, KD5XB   mailto:KD5XB@AMSAT.ORG
Clovis, New Mexico   DM84 N34.403 W103.334
Registered: APRS/DOS & WinAPRS

552. Tracking in the Carribean

From: John Dolan <jdolan@erols.com>
Date: Sun, 19 Jul 1998 16:03:01 -0700
To: aprssig@tapr.org
Message-ID: <35B27B25.744@erols.com>
Rendered body type: text/plain

Hello to the group from a very old ham...

I don't need any Amateur Viagra to understand why there are so many folks
excited about GPS enhanced tracking... My question is, what kind of
power output for the tracking TX, would be needed in the carribean to
accomplish tracking of a 32' sailboat in that area. Is it only possible
in the harbors?
--

Regards,
John Dolan
K3FIG
jdolan@erols.com

553. Re: [APRSSIG:26396] Tracking in the Carribean

From: kd4emi@juno.com (Michael A Kantor)
Date: Sun, 19 Jul 1998 16:38:30 -0400
To: jdolan@erols.com
Cc: aprssig@tapr.org
Message-ID: <19980719.163835.3158.0.kd4emi@juno.com>
Rendered body type: text/plain

John, there are a couple of options...

For really good tracking i would suggest using HF
There are quite a few Mobile / nautical stations on 10.151.
This would permit the better range.
If your just sailing around within VHF range, stick with 2 meters.

I understand that there are nautical nets that use APRS. Check with the
sig to confirm.

There are other options as well. Several 10 meter stations are starting
to pop up, as well as 6 meter stations as well. But in Carrib, suggest 30
meters... There are quite
a few fellows like me in Florida and in Puerto Rico and Haiti that
maintain HF stations.

Also, if you are heard here locally, it also goes out on the internet and
friends with internet access could track you. EG, your friend in IOWA
(non ham) could view your position ! Pretty cool huh ?
Good luck and fair winds...
MIke KD4EMI@JUNO.COM

On Sun, 19 Jul 1998 15:08:44 -0500 (CDT) John Dolan <jdolan@erols.com>
writes:
>Hello to the group from a very old ham...
>
>I don't need any Amateur Viagra to understand why there are so many
>folks
>excited about GPS enhanced tracking... My question is, what kind of
>power output for the tracking TX, would be needed in the carribean to
>accomplish tracking of a 32' sailboat in that area. Is it only
>possible

>in the harbors?
>--
>
>Regards,
>John Dolan
>K3FIG
>jdolan@erols.com
>
>

_____
You don't need to buy Internet access to use free Internet e-mail.
Get completely free e-mail from Juno at http://www.juno.com
Or call Juno at (800) 654-JUNO [654-5866]

554. Re: [APRSSIG:26386] MacAPRS 3.2.0

From: Bobbbe@aol.com
Date: Sun, 19 Jul 1998 16:48:11 EDT
To: jono@enteract.com, aprssig@tapr.org
Message-ID: <7beb4a9.35b25b8c@aol.com>
Rendered body type: text/plain

In a message dated 7/19/98 11:30:54 AM, jono@enteract.com wrote:

>And secondly, can we mount a petition to be able to change what the
>default display parameters are. I HATE the fact that course and speed
>vectors are automatically displayed. They clutter up the map. I don't
>want them; I don't use them and I want to be able to change the defaults
>so they don't come up. Can we please be able to change the default
>display settings (all of them)?

I second the matter

wd9bbe

555. DOS inittapr & restore for KPC-3 6.0 base ops

From: Arte Booten <n2zrc@webspan.net>
Date: Sun, 19 Jul 1998 17:31:43 -0400
To: APRS SIG <aprssig@tapr.org>
Message-ID: <35B265BF.89FC28D1@webspan.net>
Rendered body type: text/plain

Hi all,

     Well, I finally got a new cable to hook up the KPC-3 to the Yaesu FT-530 which, in turn, will be using the RattyShack 2 meter brick. It's been so long since I needed the KPC-3's manual (and considering that my filing system consists of many large, deep and completely disorganized piles of stuff all over the place ... typical bachelor, eh?) that I can not find it. The Pico's is at hand, but the KPC-3 (6.0 firmware) book is indeterminately misplaced. Also, I haven't used the thing since the old "Puckered Bull" was retired.

     I'll be using this setup in the shack while running APRSDos. I'd appreciate (privately, not on the SIG) some examples of INITTAPR.TNC and RESTORE.TNC for folks running a similar setup. I've gotten so used to PacComm commands that I've mostly forgotten the KPC-3 equivalents.

     BTW, much of the reason for changing over like this is to free the TM-V7a for mobile APRS use and still have the base online as a RELAY.

     Brother, I just KNOW this one's gonna generate three dozen replies!
Thanks in advance & 73
--
Arte Booten <n2zrc@webspan.net> EC/RO for Bronx County, NYC ARES/RACES
PGP Key Fingerprint: 22E5 3EC7 4E3C 2460 C570 BACA E48B 71D5 0F33 54AD
Riverdale, NY [FN30bu]   Cruise Missile Coordinates: 4052.71N/07354.06W
    TM-V7a/KPC-3 6.0/GPS-III Packet: N2ZRC@KB2VLX.#BRONX.NY.USA.NA

   "There is an undetonated Chroniton Torpedo lodged in the hull."
   "Do not attempt to disarm it until I arrive." "Arrive quickly!"
      -Seven of Nine & Tuvok, Star Trek: Voyager; "Year of Hell"

556. Re: MacAPRS 3.2.0

From: Arte Booten <n2zrc@webspan.net>
Date: Sun, 19 Jul 1998 17:49:04 -0400
To: APRS SIG <aprssig@tapr.org>
Message-ID: <35B269D0.A4F46BF@webspan.net>

Rendered body type: text/plain

Hi all,

Jon Ogden wrote:

>I've been having ... errors when using MacAPRS 3.2.0 ... "Failed to
>Allocate Screen Array" and "Segment Loader Error."

     What?! A Mac gave you a General Protection Fault-type message? I thought you Macaholics were supposed to be immune to such Micro$oft-like maladies ;-{) 73
--
Arte Booten <n2zrc@webspan.net> EC/RO for Bronx County, NYC ARES/RACES
PGP Key Fingerprint: 22E5 3EC7 4E3C 2460 C570 BACA E48B 71D5 0F33 54AD
Riverdale, NY [FN30bu]   Cruise Missile Coordinates: 4052.71N/07354.06W
    TM-V7a/KPC-3 6.0/GPS-III Packet: N2ZRC@KB2VLX.#BRONX.NY.USA.NA

   "There is an undetonated Chroniton Torpedo lodged in the hull."
   "Do not attempt to disarm it until I arrive." "Arrive quickly!"
      -Seven of Nine & Tuvok, Star Trek: Voyager; "Year of Hell"

557. Re: County Maps for Storm Warnings

From: Arte Booten <n2zrc@webspan.net>
Date: Sun, 19 Jul 1998 17:56:19 -0400
To: APRS SIG <aprssig@tapr.org>
Message-ID: <35B26B83.8EE31304@webspan.net>
Rendered body type: text/plain

Hi all,

Earl Needham wrote:

>... most maps went into separate state folders. Is this where they're
>supposed to go?

     Yup:

          WinAPRS
           '- Counties
                '- AL
                   AK
                   AR
                   AZ
                      etc.

>I have since zipped all the map files into a new .zip file.

     Only comes to a bit more than 1 Mb if I recall.

>Is there an FTP site I might upload this file to, so it's easy for
>others to benefit from it?

     Send it to ftp://ftp.tapr.org/tapr/SIG/aprssig/files/upload , then send a text file to the same place describing what the zip file is: ie: COUNTIES.TXT & COUNTIES.ZIP. 73
--
Arte Booten <n2zrc@webspan.net> EC/RO for Bronx County, NYC ARES/RACES
PGP Key Fingerprint: 22E5 3EC7 4E3C 2460 C570 BACA E48B 71D5 0F33 54AD
Riverdale, NY [FN30bu]   Cruise Missile Coordinates: 4052.71N/07354.06W
    TM-V7a/KPC-3 6.0/GPS-III Packet: N2ZRC@KB2VLX.#BRONX.NY.USA.NA

   "There is an undetonated Chroniton Torpedo lodged in the hull."
   "Do not attempt to disarm it until I arrive." "Arrive quickly!"
      -Seven of Nine & Tuvok, Star Trek: Voyager; "Year of Hell"

558. Win98 and DOS APRS

From: Joe Schlatter <w4hh@3wave.com>
Date: Sun, 19 Jul 1998 18:16:01 -0400
To: aprssig@tapr.org
Message-ID: <35B27021.46897A7C@3wave.com>
Rendered body type: text/plain

I am running DOS APRS v. 8.16. It ran fine under Win3.1 and Win95 then I upgraded to Win98. Now, DOS APRS is screwy.

I am running an AEA PK-12 on COM1. Everything runs fine when I operate packet, using PC Pakratt for Windows. When I try to run DOS APRS, by running APRS816.EXE, here is what happens:

--- the map display comes up with my QTH showing
--- at the bottom of the display, the various settings that are unique
to APRS scroll by as they are fed to the TNC
--- the box at the top left of the screen says "Sending to TNC"
--- then the box at top left of screen says "TNC not responding"
--- when I try to QUITE, I hit Q, Q, return, then that's it. System
hangs and I have to do CTRL-ALT-DEL and End Task.

Anyone else experiencing this problem? Could it have something to do
with the way Win98 handles the COM ports under DOS?

Thanks for your help,
Joe
W4HH

559. Re: [APRSSIG:26402] Win98 and DOS APRS

From: Joe Schlatter <w4hh@3wave.com>
Date: Sun, 19 Jul 1998 19:27:46 -0400
To: aprssig@tapr.org
Message-ID: <35B280F2.173FE408@3wave.com>
Rendered body type: text/plain

Corrections to this message:

I should have said that the box at the top RIGHT of the screen says
"Sending to TNC" and "TNC not responding."
And, should have said, when I try to QUIT, not QUITE. Sorry.

Joe Schlatter wrote:
>
> I am running DOS APRS v. 8.16. It ran fine under Win3.1 and Win95 then
> I upgraded to Win98. Now, DOS APRS is screwy.
>
> I am running an AEA PK-12 on COM1. Everything runs fine when I operate
> packet, using PC Pakratt for Windows. When I try to run DOS APRS, by
> running APRS816.EXE, here is what happens:
>
> --- the map display comes up with my QTH showing
> --- at the bottom of the display, the various settings that are unique
> to APRS scroll by as they are fed to the TNC
> --- the box at the top left of the screen says "Sending to TNC"
> --- then the box at top left of screen says "TNC not responding"
> --- when I try to QUITE, I hit Q, Q, return, then that's it. System
> hangs and I have to do CTRL-ALT-DEL and End Task.
>
> Anyone else experiencing this problem? Could it have something to do
> with the way Win98 handles the COM ports under DOS?
>
> Thanks for your help,
> Joe
> W4HH

560. 12-channel GPS receiver

From: ks4lb_bob@juno.com (Robert W Oldham)
Date: Sun, 19 Jul 1998 20:43:43 EDT
To: aprssig@tapr.org
Message-ID: <19980719.202926.2079.0.ks4lb_bob@juno.com>
Rendered body type: text/plain

Can anyone recommend the least expensive 12-channel receiver for APRS? My
Garmin GPS II was stolen from my car (along with a bunch of other
valuables: 2-meter mic, 10-meter radio and mic, Nikon camera w/zoom lens
& flash) and I'd like to replace it with a more capable APRS unit;
suggestions welcome! I'll probably use it with a KPC-3 with the v. 8.2
firmware and an Alinco DJ-162 or DJ-S1 with amp. for a tracker, or with a
HP 1000CX for mobile.

Bob Oldham, KS4LB

_____
You don't need to buy Internet access to use free Internet e-mail.
Get completely free e-mail from Juno at http://www.juno.com
Or call Juno at (800) 654-JUNO [654-5866]

561. Garmin Folks Terrific!

From: Jeff Reinhardt <jreinh@ix.netcom.com>
Date: Sun, 19 Jul 1998 18:56:09 -0700
To: aprssig@tapr.org
Message-ID: <35B2A3B9.6848@ix.netcom.com>
Rendered body type: text/plain

I just returned from a 6,000 round trip (by car) from CA to NY and back, with my APRS tracker running most of the time. While on the road, I encountered a problem with my older Garmin 12XL (V 2.02); the unit would just turn off for no apparent reason. Prior to my trip, the unit had proven most reliable in everyday use in SoCal.

Friday, I stopped at Garmin's HQ in Olathe, KS. I was not expecting them to take care of me on the spot, but they did! In fact, they made me an offer "I couldn't refuse" to swap my older unit for a new 12 XL.I'm pleased with the new unit (at least it remians "on") but was dismayed to find that the newer Garmin units only output at 4800 bps. My older 12XL was adjustable from 130 to 9600.

Just wanted to post kudos to the Garmin folks (as hams, we're not afraid to identify the bad guys). The Garmin people are "good guys" in my book. BTW, Garmin units are shipped with the lat/long of Garmin's HQ. I can't tell you how many times I was tempted to dump it from memory. While searching for their place, it came in VERY handy. You never know when info you think useless will come in handy, do you?

I'm off to scrape the bugs off my bumper...

73, Jeff AA6JR

562. Re: [APRSSIG:26401] Re: County Maps for Storm Warnings

From: Earl Needham <kd5xb@amsat.org>
Date: Sun, 19 Jul 1998 20:32:34 -0600
To: aprssig@tapr.org
Message-ID: <3.0.3.32.19980719203234.00a2a460@mail.pdrpip.com>
Rendered body type: text/plain

At 05:08 PM 7/19/98 -0500, Arte Booten sent:
>Hi all,
>
>Earl Needham wrote:
<snip>
>>Is there an FTP site I might upload this file to, so it's easy for
>>others to benefit from it?
>
>   Send it to ftp://ftp.tapr.org/tapr/SIG/aprssig/files/upload , then
>send a text file to the same place describing what the zip file is: ie:
>COUNTIES.TXT & COUNTIES.ZIP. 73

        It's going that-a-way now...

        7 3
        Earl

Earl Needham, KD5XB   mailto:KD5XB@AMSAT.ORG
Clovis, New Mexico   DM84 N34.403 W103.334
Registered: APRS/DOS & WinAPRS

563. Re: Porta-Digi in caving

From: "Damon Keys" <damon@cdc.net>
Date: Sun, 19 Jul 1998 22:53:12 -0400
To: <aprssig@tapr.org>
Message-ID: <001001bdb389$8a4aeee0$9f08f4cf@k4drk>
Rendered body type: text/plain

I thought I would throw in my opinion on this subject. I am involved with my local cave / cliff rescue team. I commonly get assigned to the communications team because of my interest in electronics and ham radio.

Conventional VHF radio works underground as long as the cave is made up of large borehole passage and little or no breakdown in the main passages. We had an example of this in a North Carolina rescue back in 1996, were VHF worked up a small 60 foot pit, about 800 horizontal feet after that, and then to the outside world. The problem with it is lack of privacy. Needless to say, that can cause problems with patient confidentiality. (It was also hard to get volunteers to carry their $300 radio underground)

Wiring a cave for field phones is the accepted practice at this time. It

provides privacy, and is pretty much foolproof to set up. I have to disagree about how lightweight they are. Most of our comm wire comes in rolls of 1/4 mile up to 1 mile. Combine this with a couple of field phones and your personal gear, it's far from lightweight. I have always hated this method, but it's what works, so I grin and bear it.

We purchased 3 LF cave radios about 2 years ago. This will soon be an alternative for field phones. The only thing that is taking some time is trying to find locations above ground in relation to were it is underground (in other words, you have to be standing above the underground unit for it to work efficiently. We used these in our last cave rescue, and it proved itself to be a valuable asset. We had patient information to the surface 10 minutes after we arrived at the patient, instead of an hour later when the comm team arrived.

I think that underground digi units are a great theory. I would rather lug in a few TNC's, HT's and a small laptop anyday than a roll of comm wire and field phones. I know that cost was a major factor in previous digests, but we could have put together several underground digis for what we have paid for our current equipment. One of the biggest advantages I see is the logging. No more pencil and wet paper to try and write on. Everything is their in front of you, just as you typed it (no more miscommunication problems). I hope that someday soon, we will get to at least try the theory out, and see what comes about. (I've got to get the hams in our squad interested in APRS so we can have a few extra TNC's to use!)

564. W4ONM digi WD4NHW digi KF4DC digi W4AM-1 digi

From: Ralph Fowler <rwf@BSRG.org>
Date: Mon, 20 Jul 1998 00:30:30 -0400
To: aprssig@tapr.org
Message-ID: <Version.32.19980720002901.01094990@ccegate.cokecce.com>
Rendered body type: text/plain

I need the persons who control these digis to Email or contact me ASAP.

Thanks

Ralph

565. DIGIS.POS/LOG update posted

From: Jeff Brenton <jeffb@espi.com>
Date: Sun, 19 Jul 1998 23:45:17 -0500
To: DigiOwners <digiowners@lounet.com>
Cc: aprssig <aprssig@tapr.org>
Message-ID: <35B2CB5D.8A4@espi.com>
Rendered body type: text/plain

As promised, the new DIGIS.POS and DIGIS.LOG files are posted on the Questionable Web Page, current as of all reports and searches through July 18th. There are 50 additional digipeaters in this update vs. the July 3rd files.

I know I missed a few digis out there in my search - if it doesn't have a digi "star" as a symbol, I ignored it in my search of APRServe, because too many home stations use the "radio tower" or other non-star digi-like symbols for me to sort through 1200+ stations myself.

Check the files - if you notice that I have missed a 24 hour/7 day digi in your area, let me know about it, giving me the APRS-format position report (see http://www.dididahdahdidit.com/digirules.htm for what I expect in a report), and we'll see if we can get it into the next update, sometime in early August.

http://www.dididahdahdidit.com/text/digis.pos for DOS Overlay
http://www.dididahdahdidit.com/text/digis.log for Win/MacAPRS-friendly version (works around some design problems in current versions of these programs)

Also, there is a map plot of the LOG file from WinAPRS:

http://www.dididahdahdidit.com/images/coverage.gif

This file is what some think the frequency maps are, i.e., something that shows "every digi". The APRS Frequency maps do NOT have all digis plotted on them, 'cuz I don't want to put another 10 hours of work into regenerating the base map every couple of weeks.

http://www.dididahdahdidit.com/APRSFreq.htm shows ONLY the frequency in use for a given area; the little blocks are those digis that happened to

be in the DIGIS.POS file that was distributed with WinAPRS at the time,
and it was seriously out of date. Please don't ask why your local digi
isn't on the map - look at the digi coverage map, and you'll see what a
mess the frequency map would be if all of them WERE plotted!
--

Jeff Brenton, Ham Radio call KA9VNV
Questionable web page: http://www.dididahdahdidit.com
Covert supporter of the Vast Right Wing Conspiracy (tm)

566. Re: [APRSSIG:26386] MacAPRS 3.2.0

From: Jon Ogden <jono@enteract.com>
Date: Sun, 19 Jul 98 23:56:17 -0500
To: "kb9dgb" <kb9dgb@clarc.org>, <aprssig@tapr.org>
Message-ID: <199807200448.XAA11970@tapr.org>
Rendered body type: text/plain

>>Hi all,
>>
>>I've been having a couple of recurring errors when using MacAPRS 3.2.0.
>>The two main ones I get are: "Failed to Allocate Screen Array" and
>>"Segment Loader Error." The error numbers that come to mind are 15 and
>>22 respectively I think.
>>

>I suspect that you have an extensions conflict. As to which one is
>causing the problem, your guess is as good as mine. Try turning off some
>extensions and see what happens. I am running the same version, and have
>not had any problems. Oh, I did have to increase the memory allocated to
>it though.

Well, I am running the same extensions as always. Never had these
problems with earlier versions of MacAPRS. So my guess is something
changed in the program.

73,

Jon
KE9NA

Jon Ogden
KE9NA

http://www.qsl.net/ke9na

"A life lived in fear is a life half lived."

567. Re: [APRSSIG:26400] Re: MacAPRS 3.2.0

From: Jon Ogden <jono@enteract.com>
Date: Sun, 19 Jul 98 23:59:44 -0500
To: <n2zrc@webspan.net>, <aprssig@tapr.org>
Message-ID: <199807200451.XAA12078@tapr.org>
Rendered body type: text/plain

>>I've been having ... errors when using MacAPRS 3.2.0 ... "Failed to
>>Allocate Screen Array" and "Segment Loader Error."
>
>   What?! A Mac gave you a General Protection Fault-type message? I
>thought you Macaholics were supposed to be immune to such Micro$oft-like
>maladies ;-{) 73

Oh the Mac has its share of little system bombs and crashes. Fortunately
these errors don't lock the machine up. The program just quits. But
then I have to restart the machine anyhow since when I restart the
program it thinks the serial ports are already allocated since the
program didn't properly quit in the first place.

No, we have our bombs. They are just less cryptic than Windoze. Not
much less though....

73,

Jon
KE9NA

=> Apple Stockholder and proud of it!

Jon Ogden
KE9NA

http://www.qsl.net/ke9na

"A life lived in fear is a life half lived."

568. Re: [APRSSIG:26405] Garmin Folks Terrific!

From: Jon Ogden <jono@enteract.com>
Date: Mon, 20 Jul 98 00:01:07 -0500
To: <jreinh@ix.netcom.com>, <aprssig@tapr.org>
Message-ID: <199807200453.XAA12146@tapr.org>
Rendered body type: text/plain

>I'm
>pleased with the new unit (at least it remians "on") but was dismayed to
>find that the newer Garmin units only output at 4800 bps. My older 12XL
>was adjustable from 130 to 9600.

Good to find out. Don't think I'll upgrade now.

73,

Jon
KE9NA

Jon Ogden
KE9NA

http://www.qsl.net/ke9na

"A life lived in fear is a life half lived."

569. Re: Precision Mapping Source

From: "Paul Christenson" <n3eop@hotmail.com>
Date: Sun, 19 Jul 1998 23:20:14 PDT
To: aprssig@tapr.org
Message-ID: <19980720062015.9304.qmail@hotmail.com>
Rendered body type: text/plain

>>What is a good source for the Precision Mapping CD's??

>I got mine from T-Soft at 800-345-6314 for $19.95 plus $7 shipping.

Do they have a URL?

_____
Get Your Private, Free Email at http://www.hotmail.com

570. Re: [APRSSIG:26404] 12-channel GPS receiver

From: "Paul Christenson" <n3eop@hotmail.com>
Date: Sun, 19 Jul 1998 23:46:01 PDT
To: aprssig@tapr.org, ks4lb_bob@juno.com
Message-ID: <19980720064602.11119.qmail@hotmail.com>
Rendered body type: text/plain

>Can anyone recommend the least expensive 12-channel receiver for
>APRS?

Depends if you want to use it handheld or not.

If so, I have the GPS12XL and heartily recommend it.

If not, check out the TAPR offerings. Or, if you really need cheap,
check out the Delorme Tripmate. Both have the advantage of not needing
to be manually turned on.

_____
Get Your Private, Free Email at http://www.hotmail.com

571. Re: Laptop Hard drives

From: Mark Fellhauer <sparkfel@primenet.com>
Date: Mon, 20 Jul 1998 00:32:37 -0700
To: abrookes@sympatico.ca, aprssig@tapr.org
Message-ID: <3.0.5.32.19980720003237.00813b30@pop.primenet.com>
Rendered body type: text/plain

At 11:14 AM 7/19/98 -0500, AB wrote:

>Thanks for the info, WinAPRS runs fine on the desktop
>under 95, but the old laptop running 3.1 doesn't have
>a disk drive that works (not paying $500 for a
>NEC replacement).

The hard drive in your laptop is probably just a 2.5 inch IDE version that can be replaced with ANY 2.5 inch IDE hard drive. I just dropped a 540 meg HD in a Gateway 486 Handbook for under $100. Now the BIOS only sees out to 417 MB, but I just installed an overlay program that fools the BIOS so all the space on the hard drive can be seen and used. This kind of program is free on the internet.

Places on the internet are advertising 270 meg hard drive replacements for the Handbook for $900. Who do they think they are kidding? Sheesh. I did it myself. It only took a few jeweler's screwdrivers and a set of vice-grips (to break the lock-tite on the drive-frame mounting screws).

73,

Mark
KC7BXS

572. Re: Garmin Folks Terrific!

From: Mark Fellhauer <sparkfel@primenet.com>
Date: Mon, 20 Jul 1998 00:43:01 -0700
To: jono@enteract.com, aprssig@tapr.org
Message-ID: <3.0.5.32.19980720004301.00812860@pop.primenet.com>
Rendered body type: text/plain

At 12:04 AM 7/20/98 -0500, Jon Ogden wrote:
>>I'm
>>pleased with the new unit (at least it remians "on") but was dismayed to
>>find that the newer Garmin units only output at 4800 bps. My older 12XL
>>was adjustable from 130 to 9600.
>
>Good to find out. Don't think I'll upgrade now.

That goes for me too. I spent good $$ upgrading my old Magellan Trailblazer XL's firmware, and I didn't see a lick of improvement in real user functionality afterwards, so I was debating spending $100 to get supposedly better battery life in upgrading my 12XL. This revelation makes me decide the upgrade isn't worth it. $100 bucks will buy about 440 alkaline batteries at Price/Costco, though. And since I run it in the car with the 12 volt adapter...

73,

Mark
KC7BXS

573. Re: [APRSSIG:26406] Re: County Maps for Storm Warnings

From: "schiers" <schiers@netins.net>
Date: Mon, 20 Jul 1998 06:27:43 -0500
To: <kd5xb@amsat.org>, <aprssig@tapr.org>
Message-ID: <00bd01bdb3d1$6a8cefc0$af178ea7@schiers.netins.net>
Rendered body type: text/plain

I just signed on to the tapr site and for some strange reason IE 4.x won't download any of the files in that directory. I get an error. Backing up one directory to the main files area, things download fine.

Perhaps these files haven't been marked for approved download yet? Or...are they all corrupt? I couldn't even download a text file from that directory.

Fill me in, please. 73

---
hasan schiers

N0AN

-----Original Message-----
From: Earl Needham <kd5xb@amsat.org>
To: aprssig@tapr.org <aprssig@tapr.org>
Date: Sunday, July 19, 1998 9:55 PM
Subject: [APRSSIG:26406] Re: County Maps for Storm Warnings

>At 05:08 PM 7/19/98 -0500, Arte Booten sent:
>>Hi all,
>>
>>Earl Needham wrote:
><snip>
>>>Is there an FTP site I might upload this file to, so it's easy for
>>>others to benefit from it?
>>
>>   Send it to ftp://ftp.tapr.org/tapr/SIG/aprssig/files/upload , then
>>send a text file to the same place describing what the zip file is: ie:
>>COUNTIES.TXT & COUNTIES.ZIP. 73
>
> It's going that-a-way now...
>
> 7 3
> Earl
>
>
>Earl Needham, KD5XB   mailto:KD5XB@AMSAT.ORG
>Clovis, New Mexico DM84 N34.403 W103.334
>Registered: APRS/DOS & WinAPRS
>

574. Re: [APRSSIG:26413] Re: Precision Mapping Source

From: Earl Needham <kd5xb@amsat.org>
Date: Mon, 20 Jul 1998 07:10:48 -0600
To: aprssig@tapr.org
Message-ID: <3.0.3.32.19980720071048.009a77f0@mail.pdrpip.com>
Rendered body type: text/plain

At 01:26 AM 7/20/98 -0500, Paul Christenson sent:
>>>What is a good source for the Precision Mapping CD's??
>
>>I got mine from T-Soft at 800-345-6314 for $19.95 plus $7 shipping.
>
>Do they have a URL?

        Not that I know of, but Chicago Map does, and should be easy to find
through any of the search engines.

        Of course, the Sprouls also have that CD.

        Earl

Earl Needham, KD5XB   mailto:KD5XB@AMSAT.ORG
Clovis, New Mexico   DM84 N34.403 W103.334
Registered: APRS/DOS & WinAPRS

575. Re: [APRSSIG:26417] Re: County Maps for Storm Warnings

From: Earl Needham <kd5xb@amsat.org>
Date: Mon, 20 Jul 1998 07:09:38 -0600
To: aprssig@tapr.org
Message-ID: <3.0.3.32.19980720070938.009a74b0@mail.pdrpip.com>
Rendered body type: text/plain

At 06:32 AM 7/20/98 -0500, schiers wrote:
>I just signed on to the tapr site and for some strange reason IE 4.x won't
>download any of the files in that directory. I get an error. Backing up one
>directory to the main files area, things download fine.
>
>Perhaps these files haven't been marked for approved download yet? Or...are
>they all corrupt? I couldn't even download a text file from that directory.
>
>Fill me in, please. 73

        Darned if I know -- I've never uploaded to TAPR before. I would guess
that that particular directory doesn't allow downloads.

        Earl

Earl Needham, KD5XB   mailto:KD5XB@AMSAT.ORG
Clovis, New Mexico   DM84 N34.403 W103.334
Registered: APRS/DOS & WinAPRS

576. Re: [APRSSIG:26416] Re: Garmin Folks Terrific!

From: "Brent Hildebrand" <bhildebrand@earthlink.net>
Date: Mon, 20 Jul 1998 06:13:59 -0700
To: <sparkfel@primenet.com>, <aprssig@tapr.org>
Message-ID: <001601bdb3e0$42ae3040$b8f9fea9@dell>
Rendered body type: text/plain

The Garmin 12XL v4.0 HAS the ability to set the baud rate from 130 - 9600 Baud. The battery life is far better then the v2.x models. V3.5x firmware, has/had some quirks, such as the ability to download and upload Proximity waypoints. And non-variable baud rate? I switched from a 2.02 model to 4.00 and I am very happy with the change. You mileage might vary. BH, KH2Z

-----Original Message-----
From: Mark Fellhauer <sparkfel@primenet.com>
To: aprssig@tapr.org <aprssig@tapr.org>
Date: Monday, July 20, 1998 12:46 AM
Subject: [APRSSIG:26416] Re: Garmin Folks Terrific!

>At 12:04 AM 7/20/98 -0500, Jon Ogden wrote:
>>>I'm
>>>pleased with the new unit (at least it remians "on") but was dismayed to
>>>find that the newer Garmin units only output at 4800 bps. My older 12XL
>>>was adjustable from 130 to 9600.
>>
>>Good to find out. Don't think I'll upgrade now.
>
>That goes for me too. I spent good $$ upgrading my old Magellan
>Trailblazer XL's firmware, and I didn't see a lick of improvement in real
>user functionality afterwards, so I was debating spending $100 to get
>supposedly better battery life in upgrading my 12XL. This revelation makes
>me decide the upgrade isn't worth it. $100 bucks will buy about 440
>alkaline batteries at Price/Costco, though. And since I run it in the car
>with the 12 volt adapter...
>
>73,
>
>Mark
>KC7BXS
>
>

577. Re: [APRSSIG:26405] Garmin Folks Terrific!

From: Mark Sproul <msproul@ap.org>
Date: Mon, 20 Jul 1998 09:24:16 -0400
To: jreinh@ix.netcom.com, aprssig@tapr.org
Message-ID: <v03110705b1d8f5479535@[165.1.27.20]>
Rendered body type: text/plain

>Friday, I stopped at Garmin's HQ in Olathe, KS. I was not expecting them
>to take care of me on the spot, but they did! In fact, they made me an
>offer "I couldn't refuse" to swap my older unit for a new 12 XL.I'm
>pleased with the new unit (at least it remians "on") but was dismayed to
>find that the newer Garmin units only output at 4800 bps. My older 12XL
>was adjustable from 130 to 9600.
>

The spec for NMEA output specifically calls for 4800 baud and nothing else, this works out well so you dont have to have as many options to wory about

Mark

_____
Mark Sproul |Amateur Radio: KB2ICI
Software Engineer @ Assoc Press |
msproul@ap.org |Work: 609-860-7120
North Brunswick, NJ |Fax: 609-860-7129
http://msproul.rutgers.edu/
_____

578. Mile Markers!

From: Bob Bruninga <bruninga@nadn.navy.mil>
Date: Mon, 20 Jul 1998 09:35:57 -0400 (EDT)
To: aprssig@tapr.org
Message-ID: <Pine.SOL.3.96.980720085541.21389A-100000@arctic>
Rendered body type: text/plain

While traveling yesterday with APRSdos, I realized again, how powerful the
Mile Marker locator systems on the interstates are for locating things.

Since WinAPRS and APRS+SA maps already have the mile markers and/or exit
numbers, what I needed was a simple system for APRSdos. And it's so easy,
I'm mad I didnt come up with it sooner. By building a file of all the
interstates with the LAT/LONG of the beginning and end of long line
segments of road, APRSdos can then interpolate the LAT/LONG of any mile
marker inbetween!

Here is how it works. All you do is hit M-M-VA81-114 for example
for interstate 81 in VIrginia and APRSdos will draw a vertical LONGITUDE
line where it computes that mile marker to be. The intersection of that
vertical line and the Interstate on the map is the approximate location of
that mile marker! TO make this work, my mile marker file only needed a
few lines:

```
TN81,EW,M0,L0,M1,L1    * M0 is marker #0 in TN. M1 is at the VA line
VA81,EW,M1,L1,M2,L2    * M1 was marker #0 at VA state line
VA81,EW,M2,L2,M3,L3    * M2 was marker #111 near Christiansburg
VA81,NS,M3,L3,M4,L4    * M3 was marker #180 near Lexington
                       * M4 was #340 at the WV state line
```

Notice that since the result of the computation is just a vertical or
horizontal line that then intersects the Interstate, you dont need both
LAT and LON of each marker. For EAST/WEST highways, you only need
Longitude. For N/S highways, you only need LAT, so the L# in the table
can be either LAT or long, depending on the more-or-less direction of the
highway. And you can mix-n-match as I did above, where 81 is more E/W in
the south, and more N/S in the north.

I will start building a MILEMARK.DAT file if everyone will send me the
LATS or LONGS for the interstates in your area. Look at your APRSdos map
and chose only the minimum number of MM to approximate the interstate by a
few line segments over the whole state. Send me the MM and LAT/LONGs.

Thanks! P.S. THis is built into APRS819 soon to be released...

P.S. I just guessed using MAPFIX37 and APRSdos RANGE function to build my
example file, I hope someone in VA can measure the LAT or LONG
of whatever mile marker is closest to those major bends in I-81 in VA.
Who knows, these days, there is probably a WEB site that will show you!
Or WinAPRS/APRS+SA just by cursor...

579. Re: [APRSSIG:26417] Re: County Maps for Storm Warnings

From: Steve Dimse K4HG <k4hg@tapr.org>
Date: Mon, 20 Jul 1998 10:00:24 -0400
To: <schiers@netins.net>, "aprssig" <aprssig@tapr.org>
Message-ID: <199807201400.JAA17241@tapr.org>
Rendered body type: text/plain

On 7/20/98 7:32 AM schiers (schiers@netins.net) wrote:

>I just signed on to the tapr site and for some strange reason IE 4.x won't
>download any of the files in that directory. I get an error. Backing up one
>directory to the main files area, things download fine.
>
Actually, not a strange reason at all. Files ending in .map are usually
presumed to be clickable map files, so netscape will try to load and
interpret them rather than download them. This is why javAPRS map files
have the suffix .mp

The best way to download is with a real FTP client. If you really want to
use a browser you may be able to turn this behavior off...no guarantees...

Check the file mappings preference dialog for a line with suffix of .map,
and delete it. If you don't have such a line, you are probably out of
luck.

Steve K4HG

580. Test, Pls Ignore

From: CENON Corp <cenon@cts.com>
Date: Mon, 20 Jul 1998 07:16:05 -0700
To: aprssig@tapr.org
Message-ID: <3.0.32.19980720071603.00988e80@cts.com>
Rendered body type: text/plain

to myself,

from N6AHE
thanks

581. Re: [APRSSIG:26419] Re: County Maps for Storm Warnings

From: Boyd Prestwood <w2hob@uscom.com>
Date: Mon, 20 Jul 1998 10:34:52 -0400
To: aprssig@tapr.org
Message-ID: <3.0.1.32.19980720103452.006a8e84@mail.uscom.com>
Rendered body type: text/plain

At 08:18 AM 7/20/98 -0500, you wrote:
>At 06:32 AM 7/20/98 -0500, schiers wrote:
>>I just signed on to the tapr site and for some strange reason IE 4.x won't
>>download any of the files in that directory. I get an error. Backing up one
>>directory to the main files area, things download fine.
>>Fill me in, please. 73
>
>   Darned if I know -- I've never uploaded to TAPR before. I would guess
>that that particular directory doesn't allow downloads.
>
>   Earl

W2HOB RESPONSE: TAPR doesn't permit downloading from the UPLOAD directory.
That's now a "holding pattern" for new contributions and their associated
.TXT descriptions until the WEBMaster can place them in their appropriate
"folders". It's been like this for a while now.

Hang in there. Good luck es 73 de Boyd W2HOB

582. Re: [APRSSIG:26330] Re: detector

From: Bob Bruninga <bruninga@nadn.navy.mil>
Date: Mon, 20 Jul 1998 10:42:52 -0400 (EDT)
To: John Rauch <johnr@cycat.com>
Cc: APRSSIG@tapr.org
Message-ID: <Pine.SOL.3.96.980720103852.21389H-200000@arctic>
Rendered body type: text/plain

On Sat, 18 Jul 1998, John Rauch wrote:

> Bob,,,, get real!!!   In central Florida it is not uncommon for a
> thunderstorm to have 30 "strikes" within 15 seconds!!   Are you sure you
> want to have several stations trying to transmit this type of data
> (volume) and to sync them, as a front will often have a strike range
> line of up to 30 miles!

You will recall that my message only answered the originators question
of how to report a "range" measurement on APRS, but that I didnt want
to see that kind of graphics overload on the APRS map. But I also do not
want to squelch amateur experimentation. If it works, then they coudl set
up another frequency just for lightening tracking.. Big duplication of
what the NWS is doing, in my opinion. I agree with you.. Major overload!

bob
[Attachment: vcard.vcf; text/x-vcard; 227 bytes]

583. Re: [APRSSIG:26367] Re: detector

From: Bob Bruninga <bruninga@nadn.navy.mil>
Date: Mon, 20 Jul 1998 10:46:14 -0400 (EDT)
To: Michael A Kantor <kd4emi@juno.com>
Cc: aprssig@tapr.org
Message-ID: <Pine.SOL.3.96.980720104445.21389L-100000@arctic>
Rendered body type: text/plain

On Sat, 18 Jul 1998, Michael A Kantor wrote:

> I understand that WIN APRS has county option already available...
> For dos aprs I have no clue...

Yes, APRSdos for the last 6 months will also color the couties based on
the same NWS warnings.

584. A Few Waypoint Questions to MacAPRS 3.2.0

From: is@primetime.ch (Ian Stewart, PrimeTime AG)
Date: Mon, 20 Jul 1998 17:49:54 +0200
To: aprssig@tapr.org
Message-ID: <000000194042983794594@primetime.ch>
Rendered body type: text/plain

Hi all,

I can't seem to get the Waypoint functions working in MacAPRS 3.2.0

1. Can't enter Waypoints in "Way Point List"
2. Can't download waypoints or tracks (GPS is in Garmin/Garmin mode)
3. Waypoint on/off button in map window doesn't seem to do anything.
4. Can't "Edit/Add Waypoint" in Edit menu
5. Is it possible to click on a map to enter waypoint in list.
6. Does "Simulate" playback the NMEA Log, as i can't see anything happening. "Display icon on GPS Data" is on.
7. How do i save my changes to "Edit/Add Station/Object" so when i next open the map they are still there.

I'm thinking of purchasing the program just for the GPS facilities, I don't do Ham (Yet).

Regards Ian.

I don't do .INI, .BAT, or .SYS files. I don't assign apps to files...
I don't configure peripherals or networks before using them...
I have a computer to do all that...
I Have a Mac

585. Re: [APRSSIG:26407] Re: Porta-Digi in caving

From: Bob Bruninga <bruninga@nadn.navy.mil>
Date: Mon, 20 Jul 1998 11:26:56 -0400 (EDT)
To: Damon Keys <damon@cdc.net>
Cc: aprssig@tapr.org
Message-ID: <Pine.SOL.3.96.980720112419.21389U-100000@arctic>
Rendered body type: text/plain

If you have a favorite cave (one that is also quite stright in many places so it works well at UHF) and need a map for a demo, send it to me and I will digitize it.

Actually, you can do it yourself. Just bring up my MAPFIX37 program, and start drawing the map on the screen by hand. Accuracy is not important, since when you are done, all APRS stations invloved will be using the same map, so "relative" positions will be equal on all screens...

On Sun, 19
Jul 1998, Damon Keys wrote:

> I thought I would throw in my opinion on this subject. I am involved with
> my local cave / cliff rescue team. I commonly get assigned to the
> communications team because of my interest in electronics and ham radio.
>
> Conventional VHF radio works underground as long as the cave is made up of
> large borehole passage and little or no breakdown in the main passages. We
> had an example of this in a North Carolina rescue back in 1996, were VHF
> worked up a small 60 foot pit, about 800 horizontal feet after that, and
> then to the outside world. The problem with it is lack of privacy.
> Needless to say, that can cause problems with patient confidentiality. (It
> was also hard to get volunteers to carry their $300 radio underground)
>
> Wiring a cave for field phones is the accepted practice at this time. It
> provides privacy, and is pretty much foolproof to set up. I have to
> disagree about how lightweight they are. Most of our comm wire comes in
> rolls of 1/4 mile up to 1 mile. Combine this with a couple of field phones
> and your personal gear, it's far from lightweight. I have always hated this
> method, but it's what works, so I grin and bear it.
>
> We purchased 3 LF cave radios about 2 years ago. This will soon be an
> alternative for field phones. The only thing that is taking some time is
> trying to find locations above ground in relation to were it is underground
> (in other words, you have to be standing above the underground unit for it
> to work efficiently. We used these in our last cave rescue, and it proved
> itself to be a valuable asset. We had patient information to the surface 10
> minutes after we arrived at the patient, instead of an hour later when the
> comm team arrived.
>

> I think that underground digi units are a great theory. I would rather lug
> in a few TNC's, HT's and a small laptop anyday than a roll of comm wire and
> field phones. I know that cost was a major factor in previous digests, but
> we could have put together several underground digis for what we have paid
> for our current equipment. One of the biggest advantages I see is the
> logging. No more pencil and wet paper to try and write on. Everything is
> their in front of you, just as you typed it (no more miscommunication
> problems). I hope that someday soon, we will get to at least try the theory
> out, and see what comes about. (I've got to get the hams in our squad
> interested in APRS so we can have a few extra TNC's to use!)
>
>
>

APRSdos REPLY/COMMENT:

Reply mail addr: wb4apr@amsat.org
US mail address: 115 old Farm Ct, Glen Burnie, MD 21060
See DAYTON97 HISTORY: http://web.usna.navy.mil/~bruninga/dayton.html
See Maryland APRS LIVE: http://web.usna.navy.mil/~bruninga/aprs.html
See GPS on ANY radio: http://www.tapr.org/tapr/html/mic-e.html

586. Re: [APRSSIG:26342] APRSSERVE Refresh Question

From: rdrumhel@csc.com
Date: Mon, 20 Jul 1998 08:17:34 -0700
To: aprssig@tapr.org
Message-ID: <88256647.005293D5.00@csc.com>
Rendered body type: text/plain

Hi, This problem with "refresh/update" that I reported on Friday now seems to be
working again on Monday morning. Other APRS stations in my area were having
the same problem so maybe it was our local IGATE which now is working again.
73,
Ron

rdrumhel@csc.com on 07/17/98 01:58:22 PM

Please respond to rdrumhel@csc.com

To: aprssig@tapr.org
cc: (bcc: Ronald Drumheller/TMG/CSC)
Subject: [APRSSIG:26342] APRSSERVE Refresh Question

Greetings:
I am connecting to the Florida composite USA server via TCP/IP. My question is that
after the initial posting of my station and others in the San Diego area, I never see a
refresh. I have the time being displayed for each station icon and none get reset, so
after an hour (my drop off time) the stations disappear. My station at home sends out
weather info every 15 minutes, but it never gets posted on APRSSERVE. The same
condition happens with the Illinoise server which is in sync with Flordia. If I close the
TCP/IP port and reopen it, I get the most current info, but then it never updates after
that. I am using WinAPRS 2.2.0. All stations on my San Diego map stay the same as
far as the "AGE" time is concerned. I even have "auto map update" turned on. If I go
to the "when heard display", it shows that no traffic other than the initial has been
posted.
I think this worked fine until the APRSSERVE server went down the other day.
Any ideas?
Thanks,
Ron

587. Re: [APRSSIG:26428] A Few Waypoint Questions to MacAPRS 3.2.0

From: Mark Sproul <msproul@ap.org>
Date: Mon, 20 Jul 1998 11:58:24 -0400
To: is@primetime.ch, aprssig@tapr.org
Message-ID: <v0311070cb1d919430af5@[165.1.27.20]>
Rendered body type: text/plain

At 11:00 AM -0400 7/20/98, Ian Stewart, PrimeTime AG wrote:
>Hi all,
>
>I can't seem to get the Waypoint functions working in MacAPRS 3.2.0
>
>1. Can't enter Waypoints in "Way Point List"
>2. Can't download waypoints or tracks (GPS is in Garmin/Garmin mode)
>3. Waypoint on/off button in map window doesn't seem to do anything.
>4. Can't "Edit/Add Waypoint" in Edit menu
>5. Is it possible to click on a map to enter waypoint in list.
>6. Does "Simulate" playback the NMEA Log, as i can't see anything
>happening. "Display icon on GPS Data" is on.
>7. How do i save my changes to "Edit/Add Station/Object" so when i next
>open the map they are still there.
>

Most of the WAYPOINT functions are not finished, however the DOWNLOAD WAYPOINTS does work. You MUST have the Garmin GPS in GARMIN/GARMIN mode and most configure BINARY GPS communications port to talk to it (9600 baud).

The rest of the featurs that you are refering to well be there in a couple of months.

Mark

Mark Sproul | Work: 609-860-7120
Software Engineer @ Assoc Press | Fax: 609-860-7129
msproul@ap.org

588. RE: [APRSSIG:26362] Re: Tracker websites/pictures

From: Skip Allison-CFAD07 <Skip_Allison-CFAD07@email.mot.com>
Date: Mon, 20 Jul 1998 11:43:23 -0500
To: aprssig@tapr.org
Message-ID: <"Macintosh */PRMD=MOT/ADMD=MOT/C=US/"@MHS>
Rendered body type: text/plain

To: APRS SIG
From: Allison-CFAD07 Skip on Mon, Jul 20, 1998 11:38 AM
Subject: RE: [APRSSIG:26362] Re: Tracker websites/pictures

What should I see here? All I see is the EXECPC home page - nothing on APRS.

Skip

To: aprssig@tapr.org@INTERNET
From: malloy@execpc.com@INTERNET on Jul 18, 1998 12:08
Subject: [APRSSIG:26362] Re: Tracker websites/pictures

Check Out this site.

N9UUR@execpc.com

I have seen this in operation. All you need to add is a radio. Works great.

Mike N9WJV

-----Original Message-----
From: Nick <nick_k@geocities.com>
To: aprssig@tapr.org <aprssig@tapr.org>
Date: Saturday, July 18, 1998 10:44 AM
Subject: [APRSSIG:26360] Tracker websites/pictures

>Does anyone know of any websites that would have pictures or a
>documented construction of a compact tracker?

>
>Thanks, 73,
>Nick KF4BYA
>nick_k@geocities.com
>www.qsl.net/lmars/
>--
>ICQ# 12966558
>Page me at: http://wwp.mirabilis.com/12966558
>

589. Re: [APRSSIG:26423] Re: County Maps for Storm Warnings

From: "hasan schiers" <schiers@netins.net>
Date: Mon, 20 Jul 1998 13:17:02 -0500
To: <k4hg@tapr.org>, <aprssig@tapr.org>
Message-ID: <00f901bdb40a$9c63c9e0$9a178ea7@schiers.netins.net>
Rendered body type: text/plain

That wasn't the problem. The /upload directory is NOT available to download
from. It is a staging area to be cleaned by the sysop...my mistake was
trying to download from that directory which is not permitted.

It was a .zip file that wouldn't open...then again, neither would anything
else...for a good reason..no downloads are permitted from that area...I had
forgotten about that.

Tnx for the thought, though. 73

...hasan N0AN

-----Original Message-----
From: Steve Dimse K4HG <k4hg@tapr.org>
To: aprssig@tapr.org <aprssig@tapr.org>
Date: Monday, July 20, 1998 9:08 AM
Subject: [APRSSIG:26423] Re: County Maps for Storm Warnings

>On 7/20/98 7:32 AM schiers (schiers@netins.net) wrote:
>
>>I just signed on to the tapr site and for some strange reason IE 4.x won't
>>download any of the files in that directory. I get an error. Backing up
one
>>directory to the main files area, things download fine.
>>
>Actually, not a strange reason at all. Files ending in .map are usually
>presumed to be clickable map files, so netscape will try to load and
>interpret them rather than download them. This is why javAPRS map files
>have the suffix .mp
>
>The best way to download is with a real FTP client. If you really want to
>use a browser you may be able to turn this behavior off...no guarantees...
>
>Check the file mappings preference dialog for a line with suffix of .map,
>and delete it. If you don't have such a line, you are probably out of
>luck.
>
>Steve K4HG
>

590. Too much mail

From: Mike Walker <mwalker@legato.com>
Date: Mon, 20 Jul 1998 15:43:36 -0400
To: "aprssig@tapr.org" <aprssig@tapr.org>
Cc: "dogpark@interlog.com" <dogpark@interlog.com>
Message-ID: <199807201949.PAA03295@geronimo.legato.com>
Rendered body type: text/plain

Hi All

It looks like other ham activities and work email are taking their toll on
my email reading time. I'm going to have to unsubscribe from APRS (after 4
years and gigabytes of email).

With that in mind, it would be worth while if we had a mail reflector that
could be used just for new updates (ie: version upgrades, etc).

Any comments, or do we have someone that could create such a group?

Mike

```
==============================================
Mike Walker VA3MW
Corbeil Contest Club
```

591. Re: [APRSSIG:26434] Too much mail

```
From: Mark Sproul <msproul@ap.org>
Date: Mon, 20 Jul 1998 16:08:58 -0400
To: mwalker@legato.com, aprssig@tapr.org
Message-ID: <v03110706b1d9540cbc50@[165.1.27.20]>
Rendered body type: text/plain
```

```
>
>With that in mind, it would be worth while if we had a mail reflector that
>could be used  just for new updates (ie:  version upgrades, etc).
>

There is such a list

        aprsnews@tapr.org

Go to the TAPR web site to find out how to subsribe, should be the same as
the APRS list


Mark

_____________________________ ____________________________________________
Mark Sproul                  |
Software Engineer @ Assoc Press  |Work: 609-860-7120
msproul@ap.org               |Fax:  609-860-7129
_____________________________ ____________________________________________
```

592. Re: [APRSSIG:26434] Too much mail

```
From: stan_horzepa@adc.com
Date: Mon, 20 Jul 1998 16:23:10 -0600
To: <aprssig@tapr.org>, <mwalker@legato.com>
Message-ID: <9807209009.AA900965904@adc.com>
Rendered body type: text/plain
```

```
It already exists.

     Subscribe to APRSNEWS at the TAPR Web site (www.tapr.org).

     Stan, WA1LOU


_________________________ Reply Separator _____________________________
Subject: [APRSSIG:26434] Too much mail
Author:  <mwalker@legato.com> at Internet-Mail
Date:    7/20/98 2:51 PM


Hi All

It looks like other ham activities and work email are taking their toll on
my email reading time.  I'm going to have to unsubscribe from APRS (after 4
years and gigabytes of email).

With that in mind, it would be worth while if we had a mail reflector that
could be used  just for new updates (ie:  version upgrades, etc).

Any comments, or do we have someone that could create such a group?

Mike


==============================================
Mike Walker VA3MW
Corbeil Contest Club
```

593. problem

```
From: kd4emi@juno.com (Michael A Kantor)
Date: Mon, 20 Jul 1998 16:39:56 -0400
To: aprssig@tapr.org
Message-ID: <19980720.163957.8678.0.kd4emi@juno.com>
Rendered body type: text/plain
```

When I use winaprs, everytime I use a menu function, the map that is on
the screen
shrinks to a smaller size, and I have to restore it to full size again.
Anyway to fix this?

Mike

_____
You don't need to buy Internet access to use free Internet e-mail.
Get completely free e-mail from Juno at http://www.juno.com
Or call Juno at (800) 654-JUNO [654-5866]

594. APRS819

From: Bob Bruninga <bruninga@nadn.navy.mil>
Date: Mon, 20 Jul 1998 18:41:50 -0400 (EDT)
To: aprssig@tapr.org
Cc: aprsnews@tapr.org
Message-ID: <Pine.SOL.3.96.980720182955.2092A-100000@arctic>
Rendered body type: text/plain

I just posted APRS819.zip. Whats new SEE README\NEWNOTES.TXT

* FOrwards compatible with new MSG format. Backwards compatible to
      786 somewhat and 800 fully.
* Will do the MILE MARKERS. See README\MILEMARK.TXT
* WIll capture messages to another of your SSID's
* Fixes leaks on the FILE-PRINT-MESSAGES that caused wrong msgs to print
* You can now SEND from the MAP screen
   and READ-WHEN will show you when next message will transmit

Had to give up one page of data, so you now only see 8 pages of POSITS
instead of 9. So keep an old 817 if you have it. Eventually, I will be
able to get that back up, in about 6 months when we finally abandon some
old backwards compatible stuff that is still in there..

595. Troubleshooting the GPS 30...

From: n0lrf@ott.net (Paul Stump)
Date: Mon, 20 Jul 1998 23:42:05 GMT
To: aprssig@tapr.org
Message-ID: <35b6d415.2553404@mail.ott.net>
Rendered body type: text/plain

On Mon, 20 Jul 1998 09:44:07 -0500, "Stump, Paul"
<Paul.Stump@garmin.com> wrote:

Ladies/Gents,

Here are some troubleshooting tips for sick GPS 30 receivers. I will
try to add them to my GPSpage in the near future...

>* Make sure the fuse in the lighter plug is good.
>
>* Check the current draw of the unit when you power it up, it should be
>about 100 mA. {If no current, then it probably has a broken power wire
>inside the unit near the board connector, OR the connector on the board
>needs to be re-soldered to the board}. {If it's drawing over 200 mA,
>then it is likely Hosed.}
>
>* Make sure it is outputing NMEA data at 4800 baud to a computer serial
>port, using a common terminal program or an APRS program. {If there is
>no NMEA output, and the current draw is good, then it is likely Hosed,
>OR the data wire is broken inside, OR the board connector needs to be
>resoldered to the board.}
>
>* If things are okay so far, then it probably needs a very clear view of
>the sky in all directions. If it has not had a location fix in months or
>years, if might take it up to an hour to fix. {If no fix within 2 hours
>then the patch antenna is likely marginal and could be replaced with a
>BNC pigtail for use with other GPS antennas}.

73 &,

Cheers,

Paul
Ottawa, KS, USA
n0lrf@ott.net
http://www.ott.net/~n0lrf/

596. serial port problems

From: "Guy Story, KC5GOI" <kc5goi@infospeedway.net>
Date: Mon, 20 Jul 1998 21:43:52 -0500
To: "APRSSIG" <aprssig@tapr.org>
Message-ID: <01bdb451$657a33a0$64cf2bcf@guy->
Rendered body type: text/plain

Hello eveyone, I got a weird one here. Last saturday I was going to play with a new program from Chicago Mapping called Precision Mapping Link 3.0. This is when I noticed the weird part. Up until last saturday I was able to use the same comport for APRS and to interface my GPS II+. This is when I noticed that the pc and receiver quit talking. I took my receiver to a friends house to check my receiver and it talked to his pc fine. I then borrowed his cable to see if my cable (home built) was bad. Using a cable I know is good the receiver still would not talk to my pc. This occurs on either serial port. I use com 2 for regular APRS and it talks and receives form the tnc just fine. Com 1 is my mouse port and the mouse works fine. The only activity I get is when I go to download waypoints from the receiver to aWaypoint+ or winAPRS. The receiver says it is sending the waypoints but the packet count never scrolls and the pc does not acknoledge that it got anything. I tried to use hyperterminal to view the nema data coming from the receiver and get nothing there too. Can talk to the tnc with the same program. I used winAPRS on my friends pc to view nema data and it worked like a charm.
    This I do know,
    A. the receiver is okay
    B. the serial port appears to be okay since it talks to the tnc.
    C. I have used a known good cable to check the ouput to another pc.
The question is, what happened and why. I have tried what I know and I am lost. "Hep me!!!", cries the lost man.
Thanks and 73
Guy Story, KC5GOI
Silver Dome Mobile Pk. # 79
Denton Texas, 76208
940.243.0754
kc5goi@infospeedway.net
www.infospeedway.net/~kc5goi/home.htm

597. Finding a callsign in WinAPRS?

From: Earl Needham <kd5xb@amsat.org>
Date: Mon, 20 Jul 1998 21:53:09 -0600
To: aprssig@tapr.org
Message-ID: <3.0.3.32.19980720215309.009d9100@mail.pdrpip.com>
Rendered body type: text/plain

OK, I give. What the heck is going on? I tell WinAPRS to find a callsign, and I get the circle where no station is showing. The QRZ database is installed, does WinAPRS look in the database and pinpoint the home QTH of a station if there hasn't been a position report from that station? This is weird...

        Earl

Earl Needham, KD5XB   mailto:KD5XB@AMSAT.ORG
Clovis, New Mexico   DM84 N34.403 W103.334
Registered: APRS/DOS & WinAPRS

598. Re: [APRSSIG:26441] Finding a callsign in WinAPRS?

From: Steve Dimse K4HG <k4hg@tapr.org>
Date: Tue, 21 Jul 1998 00:37:25 -0400
To: <kd5xb@amsat.org>, "aprssig" <aprssig@tapr.org>
Message-ID: <199807210437.XAA03695@tapr.org>
Rendered body type: text/plain

On 7/20/98 11:55 PM Earl Needham (kd5xb@amsat.org) wrote:

>   OK, I give. What the heck is going on? I tell WinAPRS to find a
>callsign, and I get the circle where no station is showing. The QRZ
>database is installed, does WinAPRS look in the database and pinpoint the
>home QTH of a station if there hasn't been a position report from that
>station? This is weird...
>
Yes, it does exactly that, based on zip code. If you have the Buckmaster CD, it uses zip+4, downright scary how close that gets!

Not weird, COOL!

Steve K4HG

599. Re: [APRSSIG:26420] Re: Garmin Folks Terrific!

From: AB <abrookes@sympatico.ca>
Date: Tue, 21 Jul 1998 00:33:28 -0400
To: bhildebrand@earthlink.net
Cc: aprssig@tapr.org
Message-ID: <35B41A18.66FE@sympatico.ca>
Rendered body type: text/plain

Is the 12XL field upgradeable? Probably wouldn't help
the current draw but the settable baud rate
would be great.

73, Adrian

VE3RHK

600. Re: Laptop Hard drives

From: AB <abrookes@sympatico.ca>
Date: Tue, 21 Jul 1998 00:30:16 -0400
To: Mark Fellhauer <sparkfel@primenet.com>
Cc: aprssig@tapr.org
Message-ID: <35B41958.20F2@sympatico.ca>
Rendered body type: text/plain

Thanks for the reply Mark, but its the floppy
that has failed (on this model its external propritary).

Can't seem to install Win32S from anything but floppy.

73, Adrian

VE3RHK

601. Re: Finding a callsign in WinAPRS?

From: "Rich Mazzeo" <n3xku@erols.com>
Date: Tue, 21 Jul 1998 00:49:43 -0400
To: "APRSSIG" <aprssig@tapr.org>
Message-ID: <000c01bdb462$feb96700$bf97accf@richmazz>
Rendered body type: text/plain

> OK, I give. What the heck is going on? I tell WinAPRS to find a
>callsign, and I get the circle where no station is showing. The QRZ
>database is installed, does WinAPRS look in the database and pinpoint the
>home QTH of a station if there hasn't been a position report from that
>station? This is weird...
>
> Earl

    Well QRZ or no QRZ, if the station you were looking for was there at one
time, but was then deleted or just plain expired on it's own, you can still
do a Find and the circle will show where the station was before it
disappeared.
--
Rich Mazzeo, N3XKU, Fairless Hills, PA
Bucks County SkyWarn and A.R.E.S.
TNC is on >144.390<, Automatic Position Reporting System (Mailbox: -2)
FM Voice: 147.300+ / 147.150+ / 146.970- / 444.200+ / and 146.535 / 446.025
smplx
ICBM/APRS: =4010.25N/07450.69W- (Grid: FN20ne) Currently Running: zilch

602. WinAPRS 2.2.0 with KAM - No TX

From: AB <abrookes@sympatico.ca>
Date: Tue, 21 Jul 1998 02:53:23 -0400
To: aprssig@tapr.org
Message-ID: <35B43AE3.6A71@sympatico.ca>
Rendered body type: text/plain

Well, I've played around a little more with WinAPRS 2.2.0 and
now I can see some other stations around, but I cannot
transmit.

If I exit WinAPRS and go into terminal mode from the PC,
then the KAM sends and receives fine.

Back to WinAPRS and no TX. Can't force a TX with F2 either.

Any Ideas?

Also, anyone got the wiring description or schmatic for
making a HSP cable? I want to connect a Garmin, KAM and
laptop together. (Does WinAPRS filter the Garmin output
to transmit only the appropriate parts of the sentances?)

Tnx, 73, Adrian

603. D Punches

From: rholbert@juno.com (Richard L. Holbert)
Date: Sun, 19 Jul 1998 19:11:27 edt
To: aprssig@tapr.org
Message-ID: <19980720.070858.8159.0.rholbert@juno.com>
Rendered body type: text/plain

Another alternative for making DB-9 or DB-25 holes in thin metal or
plastic is the $11 nibbler tool from RadioShack.

_____
You don't need to buy Internet access to use free Internet e-mail.
Get completely free e-mail from Juno at http://www.juno.com
Or call Juno at (800) 654-JUNO [654-5866]

604. Re: Laptop Hard drives

From: Mark Fellhauer <sparkfel@primenet.com>
Date: Tue, 21 Jul 1998 04:29:36 -0700
To: ve2aw@total.net
Cc: aprssig@tapr.org
Message-ID: <3.0.5.32.19980721042936.007cd290@pop.primenet.com>
Rendered body type: text/plain

At 11:48 AM 7/20/98 -0400, Gerry Paquette wrote:
>Good morning Mark:
>
>I have a similar requirement to upgrade a Toshiba laptop; where exactly
did you
>find the BIOS overlay program? I have been looking for one for some time now
>but had no luck. Thanks es 73
>
>

The program I like is called EZ-Drive and is a free download on Western
Digital's web site.

http://www.westerndigital.com/support/ftp/drives.html#ezdrive

I believe Maxtor has a program called Max-Blast which is similar.

Either works fine with drives from other manufacturers.

73,

Mark
KC7BXS

605. WTB:Used GPS

From: Robert Burton <kd4ydc@bellsouth.net>
Date: Tue, 21 Jul 1998 07:54:58 -0400
To: aprssig@tapr.org
Message-ID: <35B4818E.753C3E15@bellsouth.net>
Rendered body type: text/plain

Might not be the place to put this..... (sorry :-( )
I am looking for a used GPS or some clearance sales.
Interested in using it with APRS so could be a trimate if
need be. Would also be interested if you have the power
and data cables with it. Going to be running it with
a laptop and a KPC3 (not as a tracker). Hard to
find used ones (have one I found that I am considering)
but want to make some comparisons. Please email
private...will let you know how cheap I do this...
Got the KPC3 w/old eprom (I will be updating)
for $40, mailbox broke but that's ok...
Txns
Robert
KD4YDC

606. serial port

From: GStory@icomply.com
Date: Tue, 21 Jul 1998 07:37:06 -0500
To: aprssig@tapr.org
Message-ID: <F1C006463F86D111A7F900805FE2B3B3BA05@lew_prods1.icomply.com>
Rendered body type: text/plain

Found out why the GPS II+ would not talk to the pc. The serial port on
the pc died last night. Hope this saves anyone time answering my post
from last night.
Time for a new mother board it looks like, sigh.
73 Guy, KC5GOI

607. Re: [APRSSIG:26444] Re: Laptop Hard drives

From: "O.C. Winton wn1z" <wn1z@sojourner.wn1z.ampr.org>
Date: Tue, 21 Jul 1998 06:58:05 -0700
To: abrookes@sympatico.ca, aprssig@tapr.org
Message-ID: <6771@babylon.wn1z.ampr.org>
Rendered body type: text/plain

I believe i installed win32s onto my 386 by downloading
a large file from a Microsoft site onto my hard drive,
and installing from my hard drive.

Want me to find the site?

Orrin wn1z
Monterey CA

At 11:45 PM 7/20/98 -0500, AB wrote:
>Thanks for the reply Mark, but its the floppy
>that has failed (on this model its external propritary).
>
>Can't seem to install Win32S from anything but floppy.
>
>73, Adrian
>
>VE3RHK
>

608. Re: [APRSSIG:26446] WinAPRS 2.2.0 with KAM - No TX

From: AB <abrookes@sympatico.ca>
Date: Tue, 21 Jul 1998 10:55:32 -0400
To: jeffb@espi.com
Cc: aprssig@tapr.org
Message-ID: <35B4ABE4.5BB1@sympatico.ca>
Rendered body type: text/plain

Thanks for the note Jeff,

Well, it seems now to be all TNC configuration related.

If I use the KAM as a single VHF port then it transmits ok
but no receive, (it receives but doesn't process the data)
but If I set it to Dual Port, then no tx but I receive ok.

I'm using firmware 2.84 on the KAM, so maybe I need an
upgrade if some of the configuration string from APRS
isn't supported.

Don't know enough yet to build my own configuration list.

Anyone know the minimum KAM firmware revision required?

Adrian

609. ARRLWeb: ARRL Proposes Simplified Amateur License Structure

From: Dave <deeaton@lycosmail.com>
Date: Tue, 21 Jul 1998 11:27:12 -0500
To: Perry Green - KB5WSS <greenfam@gte.net>,
        Tony King - KB5ZIP <tmking@gte.net>,
        Tommie Taylor <tomcmugs@n-link.com>, Larry Nix N5TQU <oilman@lx.net>,
        Keith Roberts - K5LSM <k5lsm@airmail.net>,
        "John Bogart - KJ5BV (Abliene)" <jbogart@westex.net>,
        George - KK5AV <kk5av@gte.net>,
        Dave Dobbins - K7GPS <ddobbins@localaccess.com>,
        Charlie Cambell - KC5EZZ <kc5ezz@wcc.net>,
        "Chad Brantley (Alpine)" <cbra143@wolf.sulross.edu>,

Carl Smith - K5SO <cwsk5so@gte.net>, aprssig <aprssig@tapr.org>
Message-ID: <35B4C15F.619D74F9@lycosmail.com>
Rendered body type: text/plain

http://www.arrl.org/news/restructuring/

610. Re: [APRSSIG:26453] ARRLWeb: ARRL Proposes Simplified Amateur License Structure

From: Ray Vaughan <rvaughan@gate.net>
Date: Tue, 21 Jul 1998 13:06:05 -0400
To: deeaton@lycosmail.com
Cc: aprssig@tapr.org
Message-ID: <1.5.4.32.19980721170605.00973f90@pop.gate.net>
Rendered body type: text/plain

>http://www.arrl.org/news/restructuring/

Well, interesting... but sad. Here's my response:

"Rearranging deck chairs on the Titanic!

Yet again, the ARRL concentrates on the bands where there is NO demand for spectrum. Please wake up. VHF and up is in BIG demand. NOT HF. You're spending too much time trying to make HF look worthwhile.

Get over your hangups about CW. Two classes are more than enough. Give HF to all hams and reward CW addicts with additional 'retirement' spectrum if you must."

Ray, KD4BBM

611. Re: [APRSSIG:26453] ARRLWeb: ARRL Proposes Simplified Amateu

From: stan_horzepa@adc.com
Date: Tue, 21 Jul 1998 14:35:41 -0600
To: <aprssig@tapr.org>, <deeaton@lycosmail.com>
Message-ID: <9807219010.AA901045832@adc.com>
Rendered body type: text/plain

As a public service, deeaton has posted the URL concerning the ARRL's proposed licensing restructuring (see below).

Please go read it and carefully consider it. If you have any comments positive or negative concerning the proposal, send them to your ARRL Director, but please do not post them here on the SIG. I don't want to read your comments and I imagine that the majority of the subscribers of the SIG do not want to read them either.

Thank-you for your cooperation,

Stan Horzepa, WA1LOU

_____ Reply Separator _____
Subject: [APRSSIG:26453] ARRLWeb: ARRL Proposes Simplified Amateur Li
Author: <deeaton@lycosmail.com> at Internet-Mail
Date: 7/21/98 11:30 AM

http://www.arrl.org/news/restructuring/

612. Mile Markers

From: Bob Bruninga <bruninga@nadn.navy.mil>
Date: Tue, 21 Jul 1998 16:10:30 -0400 (EDT)
To: aprssig@tapr.org
Message-ID: <Pine.SOL.3.96.980721160407.587B-100000@arctic>
Rendered body type: text/plain

I can do all the states that use Mileage for Exits so I did some more and reposted APR819. If you already got it, then just download MILEMARK.DAT. THose without mileage exits, I cannot do without knowing the LAT/LONG of the key mile markers.

STATES DONE: AL, IL, IA, IN, KS, MO, NC, NE, NJ, OH, OR, SC, TN, VA, WA

STATES I'll do: AZ, AR, CO, ID, KY, LA, MI, MN, MS, MT, NV, NM, ND,
SD, TX, UT, WV, WI, WY

STATES I can't do because I have no MM info on them:

CA, CT, FL, GA, MA, NH, NY, PA, RI, VT,

Need help with these...

de WB4APR

613. 207.205.100.71 ?

From: w1eo@gw.ri.ultranet.com ("DoC" Dave Willard)
Date: Tue, 21 Jul 98 21:02:35 UTC
To: aprssig%tapr.org@switch.woonri
Message-ID: <22487@gw.ri.ultranet.com>
Rendered body type: text/plain

Is someone at this address attempting to connect with my ham radio
address 44.56.4.78 ? That source address is unresolvable by my
wormhole. Besides, my tcpip station is not on the air full time. HR
switch.bedford, 44.56.4.1, provides full time mail drop.

73 DoC, W1EO@gw.ri.ultranet.com
sysop @ w1on.ma.usa.noam, switch.bedford [44.56.4.1] and Boston APRS GATEway.
Data provider to NADSD-TAPR for New England (CT,NH,MA,ME,RI,VT)

614. Re: [APRSSIG:26453] ARRLWeb: ARRL Proposes Simplified Amateur License Structure

From: Earl Needham <kd5xb@amsat.org>
Date: Tue, 21 Jul 1998 17:13:40 -0600
To: aprssig@tapr.org
Message-ID: <3.0.3.32.19980721171340.0086cea0@mail.pdrpip.com>
Rendered body type: text/enriched

At 11:30 AM 7/21/98 -0500, Dave sent:

>>>>

<excerpt>http://www.arrl.org/news/restructuring/

<fontfamily><param>Arial</param><</news/>News ·
<</><italic>ARRLWeb</italic> Home

</fontfamily>

<bold>

ARRL Proposes Simplified Amateur License Structure

</bold></excerpt><<<<<<<<<

Like it was before incentive licensing? <<G>

>>>>

<excerpt><bold><<snip>

</bold></excerpt><<<<<<<<<

>>>>

<excerpt>Under the plan adopted by the Board, the entry level to Amateur
Radio would be known as Class D

</excerpt><<<<<<<<<

Like 27 MHz CB? <<G>

How interesting!

Earl

Earl Needham, KD5XB   mailto:KD5XB@AMSAT.ORG

Clovis, New Mexico   DM84 N34.403 W103.334

Registered: APRS/DOS & WinAPRS

615. KPC-3+ ver 8.3...

From: n0lrf@ott.net (Paul Stump)
Date: Wed, 22 Jul 1998 01:11:14 GMT
To: aprssig@tapr.org
Message-ID: <35b838d3.7025893@mail.ott.net>
Rendered body type: text/plain

Greetings,

Just upgraded to ver. 8.3 and want to use the laptop on occasion in
the mobile. Everything works great, except the "F8" HSP toggle does
not receive the Lat/Long and no posit on the laptop. Running an old
'286 laptop and 8.18 APRSdos. Everything else is working fine, I'm
transmitting my posit and it shows fine on the home system, etc.

The KPC command LGETCHAR is set to $05 (hex, cntrl-E). If I go O-C-G
and type <cntrl-E> I receive the $GPRMC string just fine, but no posit
update on the P-screen nor the map screen. If I go O-C-G and type F8,
I get nada, no data, no posit. Apparently the F8 key on this computer
does not send out the hex code of $05.

I must be overlooking a command or something? Should I not be in HSP?
Or Duh?

Thanks, 73 &,

Cheers,

Paul
Ottawa, KS, USA
n0lrf@ott.net
http://www.ott.net/~n0lrf/

616. Street Atlas USA

From: Earl Needham <kd5xb@amsat.org>
Date: Tue, 21 Jul 1998 21:27:04 -0600
To: aprssig@tapr.org
Message-ID: <3.0.3.32.19980721212704.008608b0@mail.pdrpip.com>
Rendered body type: text/plain

Just found Street Atlas USA version 4.0 on the clearance rack at Office
Max for $12.99 + tax. Yes, version 5 is out, but, if 4.0 will do...

        7 3
        Earl

Earl Needham, KD5XB   mailto:KD5XB@AMSAT.ORG
Clovis, New Mexico   DM84 N34.403 W103.334
Registered: APRS/DOS & WinAPRS

617. howto interrogate TNC?

From: Andrea Ceravolo <claudio@cln.it>
Date: Wed, 22 Jul 1998 08:32:33 +0200
To: "aprssig@tapr.org" <aprssig@tapr.org>
Message-ID: <35B58781.C9546C5C@cln.it>
Rendered body type: text/plain

Hello,
I'm an Italian radioamateur (IW5CEI) and I just started to learn about
APRS with some friends.
We did everything work but we can't interrogate a TNC to make it say the
sentences.
We can only receive cyclic transmission (NMEABCN 3) every thirty
seconds.
Can the TNC transmit the string if interrogated?
Thanks in advice and sorry for my bad english
Claudio Ceravolo, IW5CEI

618. RE: Lightning Detector

From: Darryl Smith <vk2tds@ozemail.com.au>
Date: Tue, 21 Jul 1998 19:58:14 +1000

To: aprssig@tapr.org
Message-ID: <35B46636.22362F57@ozemail.com.au>
Rendered body type: text/plain

People,

I dont know about you, but I somehow do not like spending US$400 for a
lightning detector when www.stormwise.com has one for US$75.

If you have a look at this site, there is a PCB shown, as well as a
performance graph. The circuit looks no more than a FET front end with a
20 KHz band pass filter, with a one-shot powering an output to a buzzer.
They also have an LED-> Fibre Optic output.

If this cost more than US$10 to design and build I woudl be surprised.
The only thing that is stopping me from building a unit like this is
that Winter in Australia does not have many lightning storms.... 3 or 4
months should improve that so I can do some real testing.

Darryl VK2TDS

619. RE: Lightning Detector

From: Mark Fellhauer <sparkfel@primenet.com>
Date: Wed, 22 Jul 1998 04:07:20 -0700
To: vk2tds@ozemail.com.au, aprssig@tapr.org
Message-ID: <3.0.5.32.19980722040720.007d99a0@pop.primenet.com>
Rendered body type: text/plain

At 03:28 AM 7/22/98 -0500, Darryl Smith wrote:
>People,
>
>I dont know about you, but I somehow do not like spending US$400 for a
>lightning detector when www.stormwise.com has one for US$75.
>

Depends on what you want. The $400 lightning detector I've seen actually
has several features of a 3M Stormscope at about a fourth of the price,
including real-time direction and distance ranging. The $75 one just beeps
and flashes a light when it detects the RF profile of a lightning strike.
This is kinda useless unless you work in an office cubicle with no windows.
 I can look around and detect lightning for free.

Unfortunately, there used to be a web site that had a link to regional
Gov't lightning detectors, but it's been closed to the public (US
lightning only). Same for the US current precipitation map. Sigh...

Many of the golf courses around Phoenix have commercial lightning
detectors...with good reason. What I want is one the reads peak
polarization of the air-to-ground electrical field. That way I can use it
to trigger induced lightning with some F-motored model rockets trailing a
thin wire. :)

73,

Mark
KC7BXS

620. Radio & PicoPacket from SK

From: Jim Neely <jmneely@ibm.net>
Date: Wed, 22 Jul 1998 06:19:54 -0500
To: aprssig@tapr.org
Message-ID: <199807221127.LAA137298@out2.ibm.net>
Rendered body type: text/plain

>>Date: Tue, 21 Jul 1998 21:13:31 -0500 (CDT)
>>Reply-to: mitzie46@hotmail.com
>>To: ka5dwr@tapr.org
>>From: mitzie46@hotmail.com
>>Subject: (Form) Comments from your Home Page from
>>
>>Name: james phillips
>>Callsign: kf4etx
>>Email: mitzie46@hotmail.com
>>
>>Address:
>>
>>City: ,
>>
>>

>>---Comments--
>>trying to help family of deceased ham sell pico and radio.new since dayton
>hamvention.all info appreciated.do you know of a way to get this info out
>to interested hams.thanks james
>>--
>>
>>Server protocol: HTTP/1.0
>>HTTP From:
>>Remote User:
>>Remote Host: dial-3.r3.gahwvl.cstel.net
>>Remote IP address: 207.144.101.73
>>
>
Jim Neely
jmneely@ibm.net   wa5lhs@tapr.org

621. Re: [APRSSIG:26460] Street Atlas USA

From: RWeinkauf@aol.com
Date: Wed, 22 Jul 1998 10:02:41 EDT
To: aprssig@tapr.org
Message-ID: <656d722c.35b5f102@aol.com>
Rendered body type: text/plain

In a message dated 98-07-21 23:52:34 EDT, you write:

<< Just found Street Atlas USA version 4.0 on the clearance rack at Office
 Max for $12.99 + tax. Yes, version 5 is out, but, if 4.0 will do... >>

FYI, even AAA Map'n'Go will work, versions 3.0 and 4.0. The maps are a little
less detailed (but not much), and while trvelling you have the added
convenience of getting Interstate exit services and lots of information about
hotels and campgrounds.

And it's also cheaper than SA, and even sometimes packaged with SA-- two
workable APRSPlus map CDs for the package price.

Rich, N8QLT

622. palmAPRS Reality Check

From: Mike Musick <71301.3106@compuserve.com>
Date: Wed, 22 Jul 1998 11:45:13 -0400
To: Blind.Copy.Receiver@compuserve.com
Message-ID: <199807221148_MC2-53DF-3EB8@compuserve.com>
Rendered body type: text/plain

A progress report... there's good news, and bad news. Or at least disappointing
news.

The bad news is that palmAPRS is nowhere near the point I thought it would be
by now, even three weeks ago. The good news is that it's at least still in
process, and will see the light of day... eventually.

June's momentum simply did not make it into July. Though progress this month
was first bogged-down fighting a serial port data problem, as features started
getting added to object management and display, it hit home how complex the
APRS system has become - it seemed like every feature programmed would uncover
two that were overlooked. Then add to that a newly-discovered problem where the
mechanism (the Palm application downloader) I was planning to use to get maps
into the Palm simply doesn't work for files, and I have to, in so many words,
"roll my own" download control system. And there are a handful of display bugs
that are proving tough to swat.

On the plus side, palmAPRS will have more functionality on OS 2.0 devices
(PalmPilot Professional and Personal models) than previously thought. The only
sacrifice from not upgrading will be no map drawing; for the present, icons
will display on a blank screen in a position-relative manner, working similarly
to APRStxt.

Adding to the scheduling woes is that I really do need to prioritize August to
preparations for premiering APRS at our local MS-150 event. This is also very
important in terms of the APRS "big picture". The need for success of this APRS
application is paramount, and that means there has to be much planning,
preparation and testing. If the world were perfect I'd be including palmAPRS as
part of this picture, but the world ain't perfect and it would be best to
concentrate on getting the job done.

The end result of all this to palmAPRS is that there's a lot of work to be done
'tween now and something with enough function to consider as a releaseable
beta. And given the nature of the snags so far - some quick to fix, some

not-so-quick - the very-revised estimate for something public is going to range
from at least another two weeks to a more-likely two months.

Nobody's more disappointed than I about this, but sometimes that's the way it
goes, even in the face of the best of intentions.

  ...mike/N0QBF
     71301.3106@compuserve.com

623. unsubscribe

From: Steve Stark <steves68@mindspring.com>
Date: Wed, 22 Jul 1998 11:58:07 -0400
To: aprssig@tapr.org
Message-ID: <35B60C0E.BF72EE5A@mindspring.com>
Rendered body type: text/plain

[Empty message body]

624. Re: [APRSSIG:26459] KPC-3+ ver 8.3...

From: Bob Bruninga <bruninga@nadn.navy.mil>
Date: Wed, 22 Jul 1998 12:20:56 -0400 (EDT)
To: Paul Stump <n0lrf@ott.net>
Cc: aprssig@tapr.org
Message-ID: <Pine.SOL.3.96.980722121405.28971A-100000@arctic>
Rendered body type: text/plain

On Tue, 21 Jul 1998, Paul Stump wrote:

> Just upgraded to ver. 8.3 and want to use the laptop on occasion in
> the mobile. Everything works great, except the "F8" HSP toggle does
> not receive the Lat/Long and no posit on the laptop. Running an old

OOPS, the only way to activate the ^E HSP equivalent is to tell APRSdos
that you are using a PICO. So restart APRSdos/new and then tell it you
have a dual port Pico

The only difference this will make otherwise is that it will INIT the TNC
with the commands found in INITPICO.TNC instead of INITKAN.TNC so you may
need to check for any differences.

Ill change the menu in the next version.

de WB4APR

625. Re: [APRSSIG:26466] palmAPRS Reality Check

From: Carl Hyde <carl.s.hyde@lmco.com>
Date: Wed, 22 Jul 1998 13:34:16 -0400
To: 71301.3106@compuserve.com
Cc: aprssig@tapr.org
Message-ID: <35B62298.CD4A0E75@lmco.com>
Rendered body type: text/plain

Mike Musick wrote:

> A progress report... there's good news, and bad news. Or at least disappointing
> news.
>
> The bad news is that palmAPRS is nowhere near the point I thought it would be
> by now, even three weeks ago. The good news is that it's at least still in
> process, and will see the light of day... eventually.
>

Mike: For those of us who are waiting for PalmAPRS this is not a dissapointment
and we will definitely encourage you by being patient and appreciative of your
efforts. I'm sure this will be a great product and please don't put added pressure
on yourself. This is the world of software development as we know it. Keep up the
good work and keep us posted!!

626. Map Link

From: Mark Fellhauer <sparkfel@primenet.com>
Date: Wed, 22 Jul 1998 10:40:48 -0700
To: aprssig@tapr.org
Message-ID: <3.0.32.19980722104047.00693974@pop.primenet.com>
Rendered body type: text/plain

I seem to have lost the URL for the Web Based APRS maplink, the one where
anyone with a web browser can enter your callsign and see where you are.

Can someone please supply me with that address.

73,

Mark
KC7BXS

627. Man-portable trackers

From: "John D. Leekley, Jr." <jleekley@execpc.com>
Date: Wed, 22 Jul 1998 13:17:41 -0600
To: aprssig@tapr.org
Message-ID: <199807221817.NAA03309@mailgw01.execpc.com>
Rendered body type: text/plain

With all of the progress on compact trackers and "stealth" digis, I'm wondering whether there is any collected wisdom on the feasibility/usefulness of a tracker that can be carried on the person.

Let me explain where I am coming from here: I have been asked to conduct a workshop/breakout session at the Wisconsin Governor's Conference on Emergency Management in late September (I am the Wisconsin SEC). I want to do a "gee-whiz" demo of ATV and APRS with the message that"you can get these services free from the hams".   I am convinced that many safety services and EM types see only the flaws in the ham community and therefore brush us off as too much trouble to deal with (they already have their trunked HTs and their cell phones, right?). My approach has been that the hams have capabilities other than VHF voice, these capabilities may be useful to have at some time in the future, and they should therefore try to overcome their prejudices and establish a relationship with the ham community.

Thus, I plan to do an ATV demo using a camera and transmitter mounted on a R/C controlled car and drive it around the room, with a picture on a large tv screen. I will also have an APRS demo using regular trackers and vehicles.

I would also like to say (even if I can't demo it at the time) that APRS can be carried by search teams and in similar situations to allow tracking of the activity.

Has anyone done anything in this area?

John
John Leekley   WB9SMM
H 414-251-7056
O 414-271-3744
jleekley@execpc.com

628. Re: [APRSSIG:26470] Map Link

From: stan_horzepa@adc.com
Date: Wed, 22 Jul 1998 14:36:39 -0600
To: <aprssig@tapr.org>, <sparkfel@primenet.com>
Message-ID: <9807229011.AA901132352@adc.com>
Rendered body type: text/plain

http://map.aprs.net/(call sign), e.g., http://map.aprs.net/wa1lou-15

_____ Reply Separator _____
Subject: [APRSSIG:26470] Map Link
Author: <sparkfel@primenet.com> at Internet-Mail
Date: 7/22/98 12:55 PM

I seem to have lost the URL for the Web Based APRS maplink, the one where anyone with a web browser can enter your callsign and see where you are.

Can someone please supply me with that address.

73,

Mark
KC7BXS

629. Map Link Thanks

From: Mark Fellhauer <sparkfel@primenet.com>
Date: Wed, 22 Jul 1998 11:36:48 -0700
To: aprssig@tapr.org
Message-ID: <3.0.32.19980722113645.0068cd80@pop.primenet.com>
Rendered body type: text/plain

Thanks to those of you who provided me with the URL. No need for any more responses in that vein.

BTW, does anyone know who is providing the APRS-Serve data for Phoenix. Is this going to be a full time deal?

73,

Mark
KC7BXS

630. RE: [APRSSIG:26469] Re: palmAPRS Reality Check

From: "Malarcher, Paul E" <pemalarc@amp.com>
Date: Wed, 22 Jul 1998 14:37:30 -0400
To: aprssig@tapr.org
Message-ID: <199807221837.NAA06066@tapr.org>
Rendered body type: text/plain

Here, here...

Paul, WB2CNF

> ----------
> From: Carl Hyde[SMTP:carl.s.hyde@lmco.com]
> Sent: Wednesday, July 22, 1998 1:40 PM
> To: aprssig@tapr.org
> Subject: [APRSSIG:26469] Re: palmAPRS Reality Check
>
>
>
> Mike Musick wrote:
>
> > A progress report... there's good news, and bad news. Or at least
> disappointing
> > news.
> >
> > The bad news is that palmAPRS is nowhere near the point I thought it
> would be
> > by now, even three weeks ago. The good news is that it's at least
> still in
> > process, and will see the light of day... eventually.
> >
>
> Mike: For those of us who are waiting for PalmAPRS this is not a
> dissapointment
> and we will definitely encourage you by being patient and appreciative
> of your
> efforts. I'm sure this will be a great product and please don't put
> added pressure
> on yourself. This is the world of software development as we know it.
> Keep up the
> good work and keep us posted!!
>
>
>

631. Y2K and Ham Radios

From: "John B. Leonard, Jr." <jleonard@tbcnet.com>
Date: Wed, 22 Jul 1998 14:55:12 -0500
To: "aprssig" <aprssig@tapr.org>
Cc: <mwfugate@aol.com>
Message-ID: <002701bdb5aa$a7662940$aae070cf@s-jleo>
Rendered body type: text/plain

Hi, there.
During the planning stages for an upcoming Red Cross/ARES drill involving the Year 2000 glitch, it occurred to us that ham radios, esp., those with microprocessors, MAY be subject to some problems of their own. This will also apply to APRS stations.

Can anyone either confirm that we have something serious to worry about, or give us some facts that will cause us not to sweat it?

Thanks

jbl

632. Man-portable trackers

From: kd4emi@juno.com (Michael A Kantor)
Date: Wed, 22 Jul 1998 16:41:22 -0400
To: jleekley@execpc.com
Cc: aprssig@tapr.org
Message-ID: <19980722.164155.3382.0.kd4emi@juno.com>
Rendered body type: text/plain

Last weekend I competed in an iron man event and was going to wear my
portable APRS tracker during the bike and running part

Unfortunately, during the switch from swimming to running, I pulled a
wire out, and could not re attach it without soldering. (I would have
messed with it more, but I was
doing unexpectedly well and wanted to get back into the race- I
accomplished what I started out to do- complete the event). Plus I was
dripping wet, etc etc

I have used this tracker before when roller blading, and have had good
luck with it.
It's kinda fun , but you really look like a geek with all of it on you.
One note that
those of you may appreciate is that in case you fall, you make sure that
you fall on the non radio side ! I put the radio and GPS on my back as to
not break it in case of a fall.

Next time, will put it all in a butt pack with no wires flopping around,
and that should do it. Before the race, another runner came up to me and
asked if I used to the GPS to keep track of where I was !! I told him I
was hooked up to the web and he thought that was cool ...

I had planned on using the car as a VHF/HF gate, but just used it as a
relay into the
regular VHF net.

I am running in 2 weeks down in Fort Lauderdale, should have it all
together then..
(swim, bike, run).
I think it is not only a real hoot to do, but would work quite well in
situations like the
search in NC for that bombing suspect-- you could keep track of all the
search parties and where they have gone...
See you in 2 weeks..look for the running man symbol.

Mike
KD4EMI@JUNO.COM

On Wed, 22 Jul 1998 13:22:01 -0500 (CDT) "John D. Leekley, Jr."
<jleekley@execpc.com> writes:
>With all of the progress on compact trackers and "stealth" digis, I'm
>wondering whether there is any collected wisdom on the
>feasibility/usefulness of a tracker that can be carried on the
>person.
>

_____
You don't need to buy Internet access to use free Internet e-mail.
Get completely free e-mail from Juno at http://www.juno.com
Or call Juno at (800) 654-JUNO [654-5866]

633. Re: [APRSSIG:26476] Man-portable trackers

From: Ray Vaughan <rvaughan@gate.net>
Date: Wed, 22 Jul 1998 17:06:17 -0400
To: kd4emi@juno.com
Cc: aprssig@tapr.org
Message-ID: <1.5.4.32.19980722210617.0097b270@pop.gate.net>
Rendered body type: text/plain

>Next time, will put it all in a butt pack with no wires flopping around,
>and that should do it. Before the race, another runner came up to me and
>asked if I used to the GPS to keep track of where I was !! I told him I
>was hooked up to the web and he thought that was cool ...

This is the way to 'sell' ham radio in the 90's. There not many other ways
to have anything wireless related to the net. I tell prospective hams that
my car's location is on my home page. That always generates a conversation
about ham radio. Remember, the InterNet is only our enemy if we let it be.

Very cool to have your body on the net! Now, if we could just track you in
the water!

Good work Michael.

Ray, KD4BBM

634. Re: [APRSSIG:26471] Man-portable trackers

From: Jonathan Kaplan <jonk@moonlink.net>
Date: Wed, 22 Jul 1998 14:37:53 -0700
To: jleekley@execpc.com, aprssig@tapr.org
Message-ID: <199807222133.OAA01219@leilani.moonlink.net>
Rendered body type: text/plain

Hi John,
        On Field Day, I had such a tracker. It Consisted of a MIM module,powered
by its own 9v battery, aGarmin 45, and an Alinco DJT11 credit card radio.
The radio was putting out 300 milliwatts. The antenna was sticking out one
side of a fanny pack, and the Garmin antenna was sticking ou the oher side.
I digi-ed it through a base station nearby. It worked very well,
considering the low power I was putting out. One problem is the position
tended to wonder a lot further than I walked, due to SA. But Other than
that, it was fun!
73 CUL
Jonathan ko6xs

At 01:22 PM 7/22/98 -0500, John D. Leekley, Jr. wrote:
>With all of the progress on compact trackers and "stealth" digis, I'm
>wondering whether there is any collected wisdom on the
>feasibility/usefulness of a tracker that can be carried on the
>person.
>
>Let me explain where I am coming from here: I have been asked to
>conduct a workshop/breakout session at the Wisconsin Governor's
>Conference on Emergency Management in late September (I am the
>Wisconsin SEC). I want to do a "gee-whiz" demo of ATV and APRS with
>the message that"you can get these services free from the hams".   I
>am convinced that many safety services and EM types see only the
>flaws in the ham community and therefore brush us off as too much
>trouble to deal with (they already have their trunked HTs and their
>cell phones, right?). My approach has been that the hams have
>capabilities other than VHF voice, these capabilities may be useful
>to have at some time in the future, and they should therefore try to
>overcome their prejudices and establish a relationship with the ham
>community.
>
>Thus, I plan to do an ATV demo using a camera and transmitter mounted
>on a R/C controlled car and drive it around the room, with a picture
>on a large tv screen. I will also have an APRS demo using regular
>trackers and vehicles.
>
>I would also like to say (even if I can't demo it at the time) that
>APRS can be carried by search teams and in similar situations to
>allow tracking of the activity.
>
>Has anyone done anything in this area?
>
>John
>John Leekley   WB9SMM
>H 414-251-7056
>O 414-271-3744
>jleekley@execpc.com
>

635. Re: [APRSSIG:26475] Y2K and Ham Radios

From: "Paul Christenson" <n3eop@hotmail.com>
Date: Wed, 22 Jul 1998 14:35:46 PDT
To: aprssig@tapr.org, jleonard@tbcnet.com
Message-ID: <19980722213547.18552.qmail@hotmail.com>
Rendered body type: text/plain

>During the planning stages for an upcoming Red Cross/ARES drill
>involving the Year 2000 glitch, it occurred to us that ham radios,
>esp., those with microprocessors, MAY be subject to some problems of

>their own. This will also apply to APRS stations.

Remember, Y2K only affects things that track the year as a 2 digit
integer. Even if a device/program does, it doesn't suffer from the
problem unless it does calculations using the year.

AFAIK, none of my rigs track the time, let alone the date. My TNC does,
if I even bother to set the clock. The worst I expect to see from my
ham gear is maybe some strange times in my MHeard list.

I can forsee some potential problems with the digis that are running
some sort of node software. If they save the time as "time of next
lookup", they'll continuously try to update the routing until the
onboard clock rolls over. Those that save as "time of last update" will
simply quit updating once the clock rolls over.

Still, it should be interesting to see...

_____
Get Your Private, Free Email at http://www.hotmail.com

636. Re: [APRSSIG:26476] Man-portable trackers

From: assib@imap1.asu.edu
Date: Wed, 22 Jul 1998 15:14:28 -0700 (MST)
To: Michael A Kantor <kd4emi@juno.com>
Cc: aprssig@tapr.org
Message-ID: <Pine.GSO.3.96.980722150700.9713B-100000@email1.asu.edu>
Rendered body type: text/plain

Hi Michael,
Good luck on your next run.
I can suggest you go to an Army Surplus store and find an aluminum made
backpack frame. Those things are VERY light, pretty strong, and they have
shoulder and waist straps. The only drawback is that I saw it for $80.
They have an aluminum frame that makes it easy to secure everything to, and it
provides protection in case of a crash. I have used those extensively in the
past, and once you get used to them, you don't ever know they are there.
bye, Assi

     Assi Friedman, 4X1KX/KK7KX Arizona State University
                  "The Truth Is Out There"
Tel: 602-844-1458 (home)
Tel: 602-965-2474 (ASUsat lab)
Fax: 602-965-0277 (ASUsat lab)
Email: assib@asu.edu
Home Page: http://www.public.asu.edu/~assib
ASUSat Page: http://www.eas.asu.edu/~nasasg/asusat/asusat.html
---

637. RE: [APRSSIG:26475] Y2K and Ham Radios

From: Don Hoffman <don@teledesic.com>
Date: Wed, 22 Jul 1998 15:19:37 -0700
To: aprssig@tapr.org
Message-ID: <EF5D1B2FF253D11195AA00805FE673BF682151@TDMAIL>
Rendered body type: text/plain

I tend to think folks worry about this specific problem far too much.
But, a simple test to apply... If the radio does not allow you to enter
a date or time, or if it does not have some other means to determine the
time (GPS, etc) then it is unlikely to contain any embedded software
that is sensitive to y2k.

Obviously TNCs and the APRS software packages do not meet his
requirement (as all are date aware), so some testing is in order. But
even there, mostly only functions which involve measurement of duration
and involve the year are at risk. It would seem that some MHEARD-like
displays and certain transmission interval times might show a glitch,
but total or extended failure seems unlikely.

But I would not bet my life on it... This whole discussion does point
out the danger of putting too much reliance (esp for life and limb
critical functions) on the correct operation of software. Y2K is only
one relatively minor source of software failure. Never put software in
a critical function without knowing you can deal with its failure, or
spend a lot of time, money and methodology to bring the risk down to an
acceptable level. Never assume that ANY software developed for the
consumer market meets the necessary risk levels.

Don - KC7YJA

-----Original Message-----
From: John B. Leonard, Jr. [mailto:jleonard@tbcnet.com]
Sent: Wednesday, July 22, 1998 1:02 PM
To: aprssig@tapr.org
Subject: [APRSSIG:26475] Y2K and Ham Radios

Hi, there.
During the planning stages for an upcoming Red Cross/ARES drill
involving
the Year 2000 glitch, it occurred to us that ham radios, esp., those
with
microprocessors, MAY be subject to some problems of their own. This
will
also apply to APRS stations.

Can anyone either confirm that we have something serious to worry about,
or
give us some facts that will cause us not to sweat it?

Thanks

jbl

638. modem & inverter hunt

From: aa8ei@eos.net
Date: Wed, 22 Jul 1998 18:09:03 -0400
To: aprssig@tapr.org
Message-ID: <l03130302b1dc12f1510c@205.133.149.120>
Rendered body type: text/plain

Inverter
Does anyone know of a 12VDC tto 120 VAC inverter that does NOT produce hash at
HF? The modem requires only 10 watts at 120 VAC.

Modem
Compatibility with Serial Tone modems (Govt. standard) and Parallel Tones (what
FEMA has in the state EOCs), so HAM multi-mode modems aren't suitable.

Any suggestions?

73, Tony

639. Re: [APRSSIG:26482] modem & inverter hunt

From: Steve Dimse K4HG <k4hg@tapr.org>
Date: Wed, 22 Jul 1998 18:37:54 -0400
To: <aa8ei@eos.net>, "aprssig" <aprssig@tapr.org>
Message-ID: <199807222237.RAA18426@tapr.org>
Rendered body type: text/plain

On 7/22/98 6:26 PM aa8ei@eos.net (aa8ei@eos.net) wrote:

>Inverter
>Does anyone know of a 12VDC tto 120 VAC inverter that does NOT produce
>hash at
>HF? The modem requires only 10 watts at 120 VAC.
>
>Modem
>Compatibility with Serial Tone modems (Govt. standard) and Parallel Tones
>(what
>FEMA has in the state EOCs), so HAM multi-mode modems aren't suitable.
>
I use a West Marine 250 Watt inverter in my van (2 HF rigs) without any
problems. It produces a sweeping noise at S4, just above the ignition
noise floor, and it is frequency-agile, it covers the APRS signal on
10.151 perhaps every 15 minutes, for a second or two tops. Not a
problem...

Steve

640. APRS and MIC-E Presentation

From: BordingK@aol.com
Date: Wed, 22 Jul 1998 22:34:48 EDT
To: aprssig@tapr.org
Message-ID: <c1ea931f.35b6a14a@aol.com>
Rendered body type: text/plain

I seem to remember someone posting a message either an APRS and/or a MIC-E
PowerPoint presentation, but I can find the correct area at TAPR.

Does anyone have such as presentation and if so can I borrow it (with full
credit to the author)?

de W5KNB
Ken

641. W7LUS?

From: Earl Needham <kd5xb@amsat.org>
Date: Wed, 22 Jul 1998 23:27:04 -0600
To: aprssig@tapr.org
Message-ID: <3.0.3.32.19980722232704.009e7100@mail.pdrpip.com>
Rendered body type: text/plain

Does anybody know where Peter (W7LUS) is these days? I saw his icon over
the weekend up in the midwest, maybe a little east of there, along with a
message that I thought said he was looking for another load. Haven't seen
him since, hope he's OK.

Earl Needham, KD5XB   mailto:KD5XB@AMSAT.ORG
Clovis, New Mexico   DM84 N34.403 W103.334

642. FYI - Waypoint+ v1.7.07 Available

From: "Brent Hildebrand" <bhildebrand@earthlink.net>
Date: Wed, 22 Jul 1998 22:28:22 -0700
To: <aprssig@tapr.org>, "APRSplus" <aprsplus@k8sn.org>
Message-ID: <007101bdb5fa$c34878c0$dceffea9@dell>
Rendered body type: text/plain

1998, July 17
Waypoint+ v1.7.07 Release Notes

1) Added Export data format for CartaLinx, part of the Idrisi Project of
Clark Labs for Cartographic Technology and Geography Analysis. See
http://www.idrisi.clarku.edu.
2) Added full support for the Garmin 12XL v4.0 receiver.
3) Added New new item on the GPS menu, Model Code. When adding support for
newer models, this code will be helpful to know.
4) Datum definition is now in an external file called Datum.txt. Additional
Datums can be added to this file for use with Waypoint+.

Brent Hildebrand, KH2Z

Waypoint+ v1.7.07
http://www.tapr.org/Waypoint

APRS+SA v0.9.17
http://www.tapr.org/APRSPLUS
..

643. APRS+SA v1.7.07 Available for Download

From: "Brent Hildebrand" <bhildebrand@earthlink.net>
Date: Wed, 22 Jul 1998 22:30:29 -0700
To: "APRSplus" <aprsplus@k8sn.org>, <aprsnews@tapr.org>, <aprssig@tapr.org>
Message-ID: <007601bdb5fb$08eb50a0$dceffea9@dell>
Rendered body type: text/plain

July 22, 1998
APRS+SA v0.9.17 Release Notes:
Changes:
1) Lists support "Wildcards". For example, KH2Z* will include all SSID's of
KH2Z as will KH2Z-*. Other valid examples are *2Z*, KH?Z*, etc.
2) Data page in Setup. The data page will automatically delete data if
enabled. Most data is deleted by time (hours). Position reports can also
be deleted by total number. Valid times are from 0 hours to a really big
number of hours. You can enable or disable deletion of data by type.
3) A default path can be set for Posits. Enter Callsign on Main page or
Setup like this: CALLSIGN/PATH where path is the path ID specified in the
Unproto setup window (Ctrl-U).
4) If the RF path is not available, all messages sent to TCPIP, if that is
available. This is useful for those running the program with a TCPIP
connection only.
5) Statusbar. Range, Proximity Alarms, Bulletins, and Search strings set up
a text variable that is displayed when you move the mouse cursor over the
statusbar of the main window. Example - do a Range function. The results

will appear in the statusbar. When the program sees the mouse move OFF the
statusbar, it will revert to normal display. Move it back onto the
statusbar will again show the most recent data.
6) The Telemetry page has an additional "Text" column. This column attempts
to show the origin of the telemetry packet. Current items for this column
include, KPC-3+, Mic-E, and MIM.
7) A new list has been added that looks at the TO field of received packets.
If the TO field does not match one of the strings in this list, it is
ignored. The list also supports wildcards. For example, if the string AP*
is in this list, then most packets from APRS+SA, APRSdos and WinAPRS will be
decoded. See the list for default values. This list by default is not
enabled.
8) Setup.exe now creates a shortcut on the desktop to APRS+SA.

Brent Hildebrand, KH2Z

Waypoint+ v1.7.07
http://www.tapr.org/Waypoint

APRS+SA v0.9.17
http://www.tapr.org/APRSPLUS
..

644. Utility - SAMerge

From: "Brent Hildebrand" <bhildebrand@earthlink.net>
Date: Wed, 22 Jul 1998 22:35:11 -0700
To: <aprssig@tapr.org>, "APRSplus" <aprsplus@k8sn.org>
Message-ID: <007801bdb5fb$aa511060$dceffea9@dell>
Rendered body type: text/plain

Included with the latest release of Waypoint+ is a little utility I wrote
many months ago. It is call SAMERGE and can be used to combine any number
of Street Atlas USA v3, v4, or v5, or MapNGo v3 map files. All drawing
objects are combined into a single file. Duplicates are eliminated. Any
Street Atlas Routes data is lost in the merge. SAMERGE.W3 can be used with
with either Waypoint.exe or APRSplus.exe. Create a shortcut to the EXE file
with SAMERGE on the command line and move SAMERGE.W3 into the same directory
as the EXE.

Brent Hildebrand, KH2Z

Waypoint+ v1.7.07
http://www.tapr.org/Waypoint

APRS+SA v0.9.17
http://www.tapr.org/APRSPLUS
..

645. Undeliverable: [APRSSIG:26486] FYI - Waypoint+ v1.7.07 Available

From: System Administrator <Private_User@amp.com>
Date: Thu, 23 Jul 1998 01:57:56 -0400
To: aprssig@tapr.org
Message-ID: <199807230557.AAA23115@tapr.org>
Rendered body type: text/plain

Your message

  To: aprssig@tapr.org
  Subject: [APRSSIG:26486] FYI - Waypoint+ v1.7.07 Available
  Sent: Thu, 23 Jul 1998 01:34:42 -0400

did not reach the following recipient(s):

Malarcher, Paul E on Thu, 23 Jul 1998 01:57:55 -0400
    Unable to deliver the message due to a communications failure
    MSEXCH:MSExchangeMTA:AMERICAS:AMMEX012

646. Undeliverable: [APRSSIG:26485] W7LUS?

From: System Administrator <Private_User@amp.com>
Date: Thu, 23 Jul 1998 01:58:05 -0400
To: aprssig@tapr.org
Message-ID: <199807230558.AAA23133@tapr.org>
Rendered body type: text/plain

Your message

  To: aprssig@tapr.org

```
  Subject: [APRSSIG:26485] W7LUS?
  Sent:    Thu, 23 Jul 1998 01:31:43 -0400

did not reach the following recipient(s):

Malarcher, Paul E on Thu, 23 Jul 1998 01:58:05 -0400
    Unable to deliver the message due to a communications failure
    MSEXCH:MSExchangeMTA:AMERICAS:AMMEX012
```

647. Undeliverable: [APRSSIG:26488] Utility - SAMerge

```
From: System Administrator <Private_User@amp.com>
Date: Thu, 23 Jul 1998 02:05:40 -0400
To: aprssig@tapr.org
Message-ID: <199807230605.BAA23753@tapr.org>
Rendered body type: text/plain

Your message

  To:      aprssig@tapr.org
  Subject: [APRSSIG:26488] Utility - SAMerge
  Sent:    Thu, 23 Jul 1998 01:42:34 -0400

did not reach the following recipient(s):

Malarcher, Paul E on Thu, 23 Jul 1998 02:05:18 -0400
    Unable to deliver the message due to a communications failure
    MSEXCH:MSExchangeMTA:AMERICAS:AMMEX012
```

648. Undeliverable: [APRSSIG:26487] APRS+SA v1.7.07 Available for Down load

```
From: System Administrator <Private_User@amp.com>
Date: Thu, 23 Jul 1998 02:13:42 -0400
To: aprssig@tapr.org
Message-ID: <199807230613.BAA24274@tapr.org>
Rendered body type: text/plain

Your message

  To:      aprssig@tapr.org
  Subject: [APRSSIG:26487] APRS+SA v1.7.07 Available for Download
  Sent:    Thu, 23 Jul 1998 01:35:32 -0400

did not reach the following recipient(s):

Malarcher, Paul E on Thu, 23 Jul 1998 02:13:21 -0400
    Unable to deliver the message due to a communications failure
    MSEXCH:MSExchangeMTA:AMERICAS:AMMEX012
```

649. Undeliverable: [APRSSIG:26490] Undeliverable: W7LUS?

```
From: System Administrator <Private_User@amp.com>
Date: Thu, 23 Jul 1998 02:30:03 -0400
To: aprssig@tapr.org
Message-ID: <199807230630.BAA25193@tapr.org>
Rendered body type: text/plain

Your message

  To:      aprssig@tapr.org
  Subject: [APRSSIG:26490] Undeliverable: W7LUS?
  Sent:    Thu, 23 Jul 1998 02:04:07 -0400

did not reach the following recipient(s):

Malarcher, Paul E on Thu, 23 Jul 1998 02:29:35 -0400
    Unable to deliver the message due to a communications failure
    MSEXCH:MSExchangeMTA:AMERICAS:AMMEX012
```

650. Undeliverable: [APRSSIG:26489] Undeliverable: FYI - Waypoint+ v1. 7.07 Available

```
From: System Administrator <Private_User@amp.com>
Date: Thu, 23 Jul 1998 02:31:22 -0400
To: aprssig@tapr.org
Message-ID: <199807230631.BAA25273@tapr.org>
Rendered body type: text/plain

Your message

  To:      aprssig@tapr.org
  Subject: [APRSSIG:26489] Undeliverable: FYI - Waypoint+ v1.7.07 Available
  Sent:    Thu, 23 Jul 1998 02:02:14 -0400
```

did not reach the following recipient(s):

Malarcher, Paul E on Thu, 23 Jul 1998 02:30:46 -0400
    Unable to deliver the message due to a communications failure
    MSEXCH:MSExchangeMTA:AMERICAS:AMMEX012

651. Undeliverable: [APRSSIG:26491] Undeliverable: Utility - SAMerge

From: System Administrator <Private_User@amp.com>
Date: Thu, 23 Jul 1998 02:43:28 -0400
To: aprssig@tapr.org
Message-ID: <199807230643.BAA26009@tapr.org>
Rendered body type: text/plain

Your message

  To: aprssig@tapr.org
  Subject: [APRSSIG:26491] Undeliverable: Utility - SAMerge
  Sent: Thu, 23 Jul 1998 02:11:20 -0400

did not reach the following recipient(s):

Malarcher, Paul E on Thu, 23 Jul 1998 02:42:32 -0400
    Unable to deliver the message due to a communications failure
    MSEXCH:MSExchangeMTA:AMERICAS:AMMEX012

652. Undeliverable: [APRSSIG:26492] Undeliverable: APRS+SA v1.7.07 Ava ilable for Down

From: System Administrator <Private_User@amp.com>
Date: Thu, 23 Jul 1998 02:54:52 -0400
To: aprssig@tapr.org
Message-ID: <199807230654.BAA27085@tapr.org>
Rendered body type: text/plain

Your message

  To: aprssig@tapr.org
  Subject: [APRSSIG:26492] Undeliverable: APRS+SA v1.7.07 Available for Down
  Sent: Thu, 23 Jul 1998 02:19:00 -0400

did not reach the following recipient(s):

Malarcher, Paul E on Thu, 23 Jul 1998 02:54:36 -0400
    Unable to deliver the message due to a communications failure
    MSEXCH:MSExchangeMTA:AMERICAS:AMMEX012

653. Undeliverable: [APRSSIG:26494] Undeliverable: Undeliverable: FYI - Waypoint+ v1.

From: System Administrator <Private_User@amp.com>
Date: Thu, 23 Jul 1998 03:24:54 -0400
To: aprssig@tapr.org
Message-ID: <199807230724.CAA28507@tapr.org>
Rendered body type: text/plain

Your message

  To: aprssig@tapr.org
  Subject: [APRSSIG:26494] Undeliverable: Undeliverable: FYI - Waypoint+
v1.
  Sent: Thu, 23 Jul 1998 02:35:54 -0400

did not reach the following recipient(s):

Malarcher, Paul E on Thu, 23 Jul 1998 03:24:54 -0400
    Unable to deliver the message due to a communications failure
    MSEXCH:MSExchangeMTA:AMERICAS:AMMEX012

654. Undeliverable: [APRSSIG:26493] Undeliverable: Undeliverable: W7LU S?

From: System Administrator <Private_User@amp.com>
Date: Thu, 23 Jul 1998 03:31:43 -0400
To: aprssig@tapr.org
Message-ID: <199807230731.CAA28756@tapr.org>
Rendered body type: text/plain

Your message

  To: aprssig@tapr.org
  Subject: [APRSSIG:26493] Undeliverable: Undeliverable: W7LUS?
  Sent: Thu, 23 Jul 1998 02:34:33 -0400

did not reach the following recipient(s):

Malarcher, Paul E on Thu, 23 Jul 1998 03:31:42 -0400
    Unable to deliver the message due to a communications failure
    MSEXCH:MSExchangeMTA:AMERICAS:AMMEX012

655. Undeliverable: [APRSSIG:26495] Undeliverable: Undeliverable: Util ity - SAMerge

From: System Administrator <Private_User@amp.com>
Date: Thu, 23 Jul 1998 03:43:43 -0400
To: aprssig@tapr.org
Message-ID: <199807230743.CAA29503@tapr.org>
Rendered body type: text/plain

Your message

  To: aprssig@tapr.org
  Subject: [APRSSIG:26495] Undeliverable: Undeliverable: Utility - SAMerge
  Sent: Thu, 23 Jul 1998 02:50:39 -0400

did not reach the following recipient(s):

Malarcher, Paul E on Thu, 23 Jul 1998 03:43:34 -0400
    Unable to deliver the message due to a communications failure
    MSEXCH:MSExchangeMTA:AMERICAS:AMMEX012

656. 70cm/9600bps Experiment

From: Mike Musick <71301.3106@compuserve.com>
Date: Thu, 23 Jul 1998 08:00:40 -0400
To: Blind.Copy.Receiver@compuserve.com
Message-ID: <199807230804_MC2-53E7-9634@compuserve.com>
Rendered body type: text/plain

A couple of folks in the SIG might remember that, last fall, we embarked on an experiment in the St. Louis area with an APRS network using 9600bps and 70cm. The end configuration was a UHF<=>gateway, a receive-only IP gateway, a WIDE digipeater at a good site, at least one mobile tracker, and two fixed-location users. We're drawing the experiment to a close today.

I would call the project "a qualified success". From the technical standpoint, it worked. The fixed operations worked very well, although the IP gateway site wasn't very reliable due to antenna location problems. But to our surprise, the tracker also worked well, and performed - as best we could tell - almost on par with the 2m/1200bps network.

We did experiment with increasing the beacon rate on the mobile to a 30 sec. interval, taking advantage of the low channel loading and broader data bandwidth of the 9600 network. This did give the appearance of better tracking paths than the equivalent 2m mobile. While multipath-induced phase errors may have been a factor in the loss of some individual packets, it was not noticed to be any worse than similar dropout problems in the 2m network. Since there didn't appear to be a meaningful difference between 1200 and 9600 performance from the outset, we just concluded empirically that "it worked", and didn't further quantize the results.

The "downside" of the experiment was administrative, and is the reason it's being drawn to a close. Getting an unconflicted 440 channel was not a difficult process, but the understanding that we were free to use the agreed frequency turned out to not be universal. To avoid further misunderstandings we elected to discontinue the project.

  ...mike/N0QBF
     71301.3106@compuserve.com

657. New user - Problems winth Win APRS

From: Bob Oesterlin <oester@us.ibm.com>
Date: Thu, 23 Jul 1998 08:38:48 -0400
To: <aprssig@tapr.org>
Message-ID: <501040002519920100000 2L012*@MHS>
Rendered body type: text/plain

Just getting started with APRS. I have sent in my registration for Win APRS, but I have been running it to get a feel for the program. I have a strange problem that I hope someone can explain.

I have a AEA PK-12 TNC that I have hooked up. Over time I start to see stations in the station list and in the position list. BUT - the Lat/Long info for the stations are BLANK in the position list. (and as a result they don't show up on the map) If I look at the history list, I do see the lat/long info coming

across, it 's just that the program for some reason is not parsing the data correctly. Now, I'm thinking that I must have a TNC setting wrong, but I can't figure it out. Also, most of the stations I'm hearing are via WIDE digi. The one station I did see position info for was using a Mic-E. But even the local stations that I hear directly don't show up.

Bob

--
Bob Oesterlin, N0EST
Rochester MN   oester@us.ibm.com

658. Re: [APRSSIG:26500] 70cm/9600bps Experiment

From: "Paul J. Toth" <ptoth1@tampabay.rr.com>
Date: Thu, 23 Jul 1998 09:41:41 -0400
To: 71301.3106@compuserve.com, aprssig@tapr.org
Message-ID: <35B73D94.5A0A692F@tampabay.rr.com>
Rendered body type: text/plain

Mike....

Congratulations on your efforts. I, for one, would like to see more work with APRS on another band that will support higher data throughput. This is one of the factors which, I believe, will help us attract more people to Amateur Radio and APRS.

Amateur Radio has a history as a place where experimentation and improvement of technology has been welcome. It is unfortunate you have encountered difficulty securing long term bandwidth to continue the experiment. You would think, with 30 MHz available, there would be a place for 9600 baud APRS in the 70 cm band.

73!

Paul J. Toth
K2SEC

Mike Musick wrote:

> A couple of folks in the SIG might remember that, last fall, we embarked on an
> experiment in the St. Louis area with an APRS network using 9600bps and 70cm.
> The end configuration was a UHF<=>gateway, a receive-only IP gateway, a WIDE
> digipeater at a good site, at least one mobile tracker, and two fixed-location
> users. We're drawing the experiment to a close today.
>
> I would call the project "a qualified success". From the technical standpoint,
> it worked. The fixed operations worked very well, although the IP gateway site
> wasn't very reliable due to antenna location problems. But to our surprise, the
> tracker also worked well, and performed - as best we could tell - almost on par
> with the 2m/1200bps network.
>
> We did experiment with increasing the beacon rate on the mobile to a 30 sec.
> interval, taking advantage of the low channel loading and broader data
> bandwidth of the 9600 network. This did give the appearance of better tracking
> paths than the equivalent 2m mobile. While multipath-induced phase errors may
> have been a factor in the loss of some individual packets, it was not noticed
> to be any worse than similar dropout problems in the 2m network. Since there
> didn't appear to be a meaningful difference between 1200 and 9600 performance
> from the outset, we just concluded empirically that "it worked", and didn't
> further quantize the results.
>
> The "downside" of the experiment was administrative, and is the reason it's
> being drawn to a close. Getting an unconflicted 440 channel was not a difficult
> process, but the understanding that we were free to use the agreed frequency
> turned out to not be universal. To avoid further misunderstandings we elected
> to discontinue the project.
>
>   ...mike/N0QBF
>   71301.3106@compuserve.com

659. Trip today!

From: Jon Ogden <jono@enteract.com>
Date: Thu, 23 Jul 98 09:00:00 -0500
To: <aprssig@tapr.org>
Message-ID: <199807231351.IAA25453@tapr.org>
Rendered body type: text/plain

Hey all,

I am heading out today en route to a sailing regatta at Harbor Springs,

Michigan. So you guys in 8 land, look out for me. I'll likely be on
146.52 simplex.

73,

Jon
KE9NA

Jon Ogden
KE9NA

http://www.qsl.net/ke9na

"A life lived in fear is a life half lived."

660. IWIN messages to APRS

From: "David McCarthy" <kc7ayx@hotmail.com>
Date: Thu, 23 Jul 1998 07:14:27 PDT
To: aprssig@tapr.org
Message-ID: <19980723141428.24074.qmail@hotmail.com>
Rendered body type: text/plain

The Phoenix NWS currently has a Ham station. It includes a packet BBS
running FBB. We already have it set-up on the LAN and weather bulletins
are fed to it and posted on the BBS.

There is a large interest in moving the packet station to APRS. We
would like to utilize the bulletins and have them sent out on APRS.
Anybody have information or ideas on how to do this? What software is
required?

Thank you in advance for your help.

//
David C. McCarthy - KC7AYX - Red Cross Disaster Services
ARES EC - Skywarn - APRS - Motorola ARC of Arizona
mailto:kc7ayx@hotmail.com - SkyPager: 1-888-260-8153

Check out the Pictures of the MARCA Field Day 1998
http://www.angelfire.com/az/kc7ayx/index.html

_____
Get Your Private, Free Email at http://www.hotmail.com

661. APRS & 9600

From: "Biekert, Robert" <robert.e.biekert@usahq.unitedspacealliance.com>
Date: Thu, 23 Jul 1998 09:16:07 -0500
To: aprssig@tapr.org
Message-ID: <199807231417.JAA26986@tapr.org>
Rendered body type: text/plain

Here's how I run APRS
I am using the APRS+SA software, running under Win 98, with the etherax25
drivers and shims so that my 9600 baud TNC on 70cm thinks it's an ethernet
card. So via our CLARC internet/packet Gateway I can pull in and send out
APRS data via TCPIP at 9600 baud. Works great.

To show the public what we can do at Field Day this year we set up a demo
booth, we had:
* 9600 baud TCPIP packet, showing internet exporer, APRS+SA, email, etc
wireless lan from the park to our gateway
* SSTV using win95sstv
* ATV on 900MHz linking the various tents we had set up
* Digital camera snapping photos and ftp'ing them to our web site field day
page (all over the air!)

It was a very popular demo booth.

We had 180+ folks sign in (operators and visitors)

73 Bob KA5GLX Houston Texas real email   ka5glx@clarc.org

662. Re: Man-portable trackers

From: Arte Booten <n2zrc@webspan.net>
Date: Wed, 22 Jul 1998 17:45:55 -0400
To: jleekley@execpc.com, APRS SIG <aprssig@tapr.org>
Message-ID: <35B65D92.B29B2FF0@webspan.net>
Rendered body type: text/plain

Hi all,

John D. Leekley, Jr. wrote:

>... is [there] any collected wisdom on the feasibility/usefulness of a
>tracker that can be carried on the person.

     Some time ago I described just such a stand-alone-and-walk-about
tracker. I have a PicoPacket with the built-in GPS and battery pack.
This unit is maybe 2 x 3 x 4 inches tops and I built a pouch for it
with a belt loop. It also comes with the little Trimble amplified an-
tenna (about 1 1/2" square by 3/8" thick. I sewed a NYC RACES patch on
a baseball cap, just in front of that little button on top that holds
the junction of the sections of the cap ... but only sewed it about 2/3
of the way around. At the apex are a couple of little pieces of velcro.
Into this pocket I slip the antenna and route the wire from it through
a little hole in the mesh of the cap, down my ponytail of hair, thence
into my shirt and back out at the waist, where it plugs into the TNC.
On my other hip rests the HT.

     This setup is only good for about 20-30 minutes, as the battery
pack for the Pico really doesn't seem to last very long ... but there's
no reason why one couldn't use a converted camcorder/laptop/whatever
battery for extended operation. Heck, if you're already going to be
carrying some kind of backpack (which could also be the mounting point
for an antenna with a bit more "oomph" than your rubber ducky), what's
to stop you from carrying a few amps worth of gel cells? 73
--
Arte Booten <n2zrc@webspan.net> EC/RO for Bronx County, NYC ARES/RACES
PGP Key Fingerprint: 22E5 3EC7 4E3C 2460 C570 BACA E48B 71D5 0F33 54AD
Riverdale, NY [FN30bu]   Cruise Missile Coordinates: 4052.71N/07354.06W
    TM-V7a/KPC-3 6.0/GPS-III Packet: N2ZRC@KB2VLX.#BRONX.NY.USA.NA

   "There is an undetonated Chroniton Torpedo lodged in the hull."
   "Do not attempt to disarm it until I arrive." "Arrive quickly!"
      -Seven of Nine & Tuvok, Star Trek: Voyager; "Year of Hell"

663. Seattle Mic-E

From: Earl Needham <kd5xb@amsat.org>
Date: Thu, 23 Jul 1998 16:54:01 -0600
To: aprssig@tapr.org
Message-ID: <3.0.3.32.19980723165401.009f7350@mail.pdrpip.com>
Rendered body type: text/plain

I've been watching a station identified as "SAG-3" up in Seattle. FB --
I've tracked this station across town via TCP/IP. Only question I have is
-- and this was covered not long ago -- is 75 MPH legal on highway 513?
Even though I have both Street Atlas 4.0 and Precision Mapping 3.0, the
maps do not seem to indicate whether this is a residential area or a freeway.

        Food for thought...

        7 3
        Earl

Earl Needham, KD5XB   mailto:KD5XB@AMSAT.ORG
Clovis, New Mexico   DM84 N34.403 W103.334

664. Objects in APRSplus

From: Kevin Kelly <kkelly@radix.net>
Date: Thu, 23 Jul 1998 20:48:41 -0400
To: "aprssig@tapr.org" <aprssig@tapr.org>
Message-ID: <35B7D9E9.746F7A39@radix.net>
Rendered body type: text/plain

Greetings SIG:

I am looking for some help with APRSplus. Specifically I am trying to
turn on the symbol icons. Right now all I get is the call instead of a
house or car icon.

Thanks,
Kevin Kelly/N6QAB
kkelly@radix.net

665. AZ,OK and ONT markers

From: Bob Bruninga <bruninga@nadn.navy.mil>
Date: Thu, 23 Jul 1998 20:49:22 -0400 (EDT)
To: aprssig@tapr.org
Message-ID: <Pine.SOL.3.96.980723204327.14373K-100000@arctic>
Rendered body type: text/plain

By request, I went ahead and added Oklahoma and Arizona and VE3FGK
submitted some roads in Ontario. CAUTION, these data are only
approximate. I wouldnt be surprised at errors of several miles since I
got the LAT/LONG by looking at an APRS map while getting EXIT numbers from
a highway map. If you happen to pass by one of the
exits that I used for a reference point, it would be nice if you recorded
a more precise LAT or LONG. Still the large scale interpolation will
never make these closer than a few miles at best, so use them
appropriately.

The objective is just to know approximately where someone is when they are
crusing the interstate and talking on voice that they are near mile marker
156 for example...

bob

666. KPC 3+ 8.2

From: Kevin Kelly <kkelly@radix.net>
Date: Thu, 23 Jul 1998 20:52:50 -0400
To: "aprssig@tapr.org" <aprssig@tapr.org>
Message-ID: <35B7DAE2.A609D050@radix.net>
Rendered body type: text/plain

Greetings SIG:

Are APRSplus and/or winAPRS setup to use the GPS com port that was
recently added to the 8.2 firmware? If so, how should it be setup in the
program?

Thanks in advance...

73
Kevin Kelly/N6QAB
kkelly@radix.net

667. 8.3 not 8.2

From: Kevin Kelly <kkelly@radix.net>
Date: Thu, 23 Jul 1998 21:17:56 -0400
To: "aprssig@tapr.org" <aprssig@tapr.org>
Message-ID: <35B7E0C4.545CCA09@radix.net>
Rendered body type: text/plain

Sorry about that version mix up.

73,
Kevin Kelly/N6QAB

668. man portable trackers

From: Wes Johnston <kd4rdb@eagnet.com>
Date: Thu, 23 Jul 1998 21:52:16 -0400
To: aprssig@tapr.org
Message-ID: <3.0.32.19980723215215.006fc7a0@gena>
Rendered body type: text/plain

http://www.qsl.net/kd4rdb/body.htm

I've started a web page for 'body trackers'. Check it out, and let me know
what you think! I belive that this will offer a whole new practical
perspective into the way we use aprs!
Wes
Email: mailto:kd4rdb@eagnet.com
AlphaPager: mailto:kd4rdb@eagnet.com - subject line: PAGER
APRS: http://www.qsl.net/kd4rdb/aprs.htm

CAMPER FOR SALE: http://www.qsl.net/kd4rdb/camper.htm

669. Re: [APRSSIG:26507] Seattle Mic-E

From: Jim Shepherd <NVJims@desertlinc.com>
Date: Thu, 23 Jul 1998 18:19:24 -0700
To: kd5xb@amsat.org, aprssig@tapr.org
Message-ID: <3.0.5.16.19980723181924.2caf87b0@mail.desertlinc.com>
Rendered body type: text/plain

At 05:56 PM 7/23/98 -0500, Earl Needham wrote:
>
>   I've been watching a station identified as "SAG-3" up in Seattle. FB --
>I've tracked this station across town via TCP/IP. Only question I have is
>-- and this was covered not long ago -- is 75 MPH legal on highway 513?
>Even though I have both Street Atlas 4.0 and Precision Mapping 3.0, the
>maps do not seem to indicate whether this is a residential area or a freeway.
>
>   Food for thought...
>
>
>   7 3
>   Earl
>
>
>Earl Needham, KD5XB   mailto:KD5XB@AMSAT.ORG
>Clovis, New Mexico   DM84 N34.403 W103.334
>
>
>

There is a Highway Patrol Trooper in Northern Nevada who is APRS
capable..... Also, the retiring Chief of Police of Carlin, NV has expressed
an interest, and he is a ham and will be moving to take on another LE
assignment somewhere in the west.....

MORE food for thought....

73's, Jim N7WVZ
Jim Shepherd
Winnemucca, Nevada
NVJims@desertlinc.com

670. Re: Problems winth Win APRS

From: "Gary Laurance" <n7nat@fnord.nwinfo.net>
Date: Thu, 23 Jul 1998 21:36:05 +0000
To: oester@us.ibm.com, aprssig@tapr.org
Message-ID: <199807240436.VAA24369@fnord.nwinfo.net>
Rendered body type: text/plain

Bob, I also getting a PK-12 set up for a fried of mine and have the
same problem, have not give up yet but still trying all the parms of
the tnc to see if the problem is there, if you find something before
me, please let me know. The station I set up is the only one on the
map.
 Gary

> Date: Thu, 23 Jul 1998 07:37:13 -0500 (CDT)
> Reply-to: oester@us.ibm.com
> From: Bob Oesterlin <oester@us.ibm.com>
> To: aprssig@tapr.org
> Subject: [APRSSIG:26501] New user - Problems winth Win APRS

> Just getting started with APRS. I have sent in my registration for Win APRS,
> but I have been running it to get a feel for the program. I have a strange
> problem that I hope someone can explain.
>
> I have a AEA PK-12 TNC that I have hooked up. Over time I start to see stations
> in the station list and in the position list. BUT - the Lat/Long info for the
> stations are BLANK in the position list. (and as a result they don't show up
> on the map) If I look at the history list, I do see the lat/long info coming
> across, it 's just that the program for some reason is not parsing the data
> correctly. Now, I'm thinking that I must have a TNC setting wrong, but I can't
> figure it out. Also, most of the stations I'm hearing are via WIDE digi. The
> one station I did see position info for was using a Mic-E. But even the local
> stations that I hear directly don't show up.
>
> Bob
>
> --
> Bob Oesterlin, N0EST
> Rochester MN   oester@us.ibm.com
>

>
>

671. Re: [APRSSIG:26514] Re: Problems winth Win APRS

From: Jeff Brenton <jeffb@espi.com>
Date: Fri, 24 Jul 1998 00:20:47 -0500
To: n7nat@fnord.nwinfo.net
Cc: aprssig <aprssig@tapr.org>
Message-ID: <35B819AE.6D18@espi.com>
Rendered body type: text/plain

Isn't the PK-12 the "odd man out" on AEA TNCs, in that it uses the TNC-2
command set, and should NOT be initialized with INITAEA.TNC, like most
others?

Gary Laurance wrote:
> Bob, I also getting a PK-12 set up for a fried of mine and have the
> same problem, have not give up yet but still trying all the parms of
> the tnc to see if the problem is there, if you find something before
> me, please let me know. The station I set up is the only one on the
> map.

--

Jeff Brenton, Ham Radio call KA9VNV
Questionable web page: http://www.dididahdahdidit.com
Covert supporter of the Vast Right Wing Conspiracy (tm)

672. Re: [APRSSIG:26507] Seattle Mic-E

From: "Kevin Heyboer" <kd4uyr@gte.net>
Date: Fri, 24 Jul 1998 07:58:40 -0400
To: <kd5xb@amsat.org>, <aprssig@tapr.org>
Message-ID: <001f01bdb6fa$678e4c20$4cf3ffd0@kh>
Rendered body type: text/plain

Regarding the speed of "SAG-3" in Seattle, this is one of many occasions in
which I have seen remarks made here about the speed shown by a moving Icon.
Frankly, I don't think it is anybody's business on this sig or on the APRS
net how fast someone chooses to drive.

As far as I know, I am the only law enforcement officer on this sig and my
jurisdiction certainly doesn't extend to Seattle. How do you know "SAG-3"
isn't a rescue squad, ambulance, or police car?

If I ran my tracker all the time, you would see me going 80, 90, 100 mph at
times....my land speed record is 140 in a six cylinder oldsmobile at 1030 in
the morning on a six lane business route....all perfectly legal as it was in
performance of duty.

I personally don't think anyone should be chided for their speed...GPS units
aren't that accurate anyway with built in errors automatically sent by the
government. Certainly, if you feel the need to make a comment, you should
get the facts first since the speed might be legal, or lawfully
authorized....then send a private message, not a public one.

Kevin Heyboer KD4UYR
Pinellas SKYWARN Coordinator and EMWIN station

673. Re: man portable trackers

From: n0lrf@ott.net (Paul Stump)
Date: Fri, 24 Jul 1998 12:02:15 GMT
To: aprssig@tapr.org
Message-ID: <35b87671.1637885@mail.ott.net>
Rendered body type: text/plain

>Date: Thu, 23 Jul 1998 21:52:16 -0400
>From: Wes Johnston <kd4rdb@eagnet.com>
>To: aprssig@tapr.org
>Subject: man portable trackers
>Message-ID: <3.0.32.19980723215215.006fc7a0@gena>
>
>http://www.qsl.net/kd4rdb/body.htm
>
>I've started a web page for 'body trackers'. Check it out, and let me know
>what you think! I belive that this will offer a whole new practical
>perspective into the way we use aprs!

Greetings,

My SCAT or Fanny tracker is shown on:

http://www.ott.net/~n0lrf/gpspage.htm

Although not quite as *personal* as Wes's, it IS less invasive...

73 &,

Cheers,

Paul
Ottawa, KS, USA
n0lrf@ott.net
http://www.ott.net/~n0lrf/

674. Re: [APRSSIG:26515] Re: Problems winth Win APRS

From: Bruce Douberley <bcdpe@CLEMSON.EDU>
Date: Fri, 24 Jul 1998 08:20:50 -0400
To: aprssig@tapr.org
Message-ID: <3.0.5.32.19980724082050.007d2910@pop.innova.net>
Rendered body type: text/plain

At 12:22 AM 7/24/98 -0500, you wrote:
>Isn't the PK-12 the "odd man out" on AEA TNCs, in that it uses the TNC-2
>command set, and should NOT be initialized with INITAEA.TNC, like most
>others?
>--
>Jeff Brenton, Ham Radio call KA9VNV
>Questionable web page: http://www.dididahdahdidit.com
>Covert supporter of the Vast Right Wing Conspiracy (tm)
>

I got one and have been using it for years with the initaea.tnc with no
problems.

675. PK-12 Problems

From: Mike Heskett <mheskett@startext.net>
Date: Fri, 24 Jul 1998 07:37:27 -0500
To: "aprs>"<aprssig@tapr.org>
Message-ID: <3.0.3.32.19980724073727.006af890@mail.startext.net>
Rendered body type: text/plain

If you are having problems with a PK-12 not seeing other stations, then
check the setting of:

BBSMSGS

  I found tha it must be ON for parsing to work correctly. EXP must be On
as well to allow some of the other changes to be made.

==/===/===/===/===/===/===/===/===/===/===/===/===/===/===/===/
Mike Heskett   email   mheskett@startext.net
WB5QLD   packet WB5QLD@WO5H.#DFW.TX.USA.NOAM
Hurst, TX   WWW   http://www.startext.net/homes/mheskett/
O-

676. Re: [APRSSIG:26507] Seattle Mic-E

From: Earl Needham <kd5xb@amsat.org>
Date: Fri, 24 Jul 1998 07:14:33 -0600
To: aprssig@tapr.org
Cc: kd4uyr@gte.net
Message-ID: <3.0.3.32.19980724071433.00828da0@mail.pdrpip.com>
Rendered body type: text/plain

At 07:58 AM 7/24/98 -0400, Kevin Heyboer wrote:
<snip>
>As far as I know, I am the only law enforcement officer on this sig and my
>jurisdiction certainly doesn't extend to Seattle. How do you know "SAG-3"
>isn't a rescue squad, ambulance, or police car?
>
>If I ran my tracker all the time, you would see me going 80, 90, 100 mph at
>times....my land speed record is 140 in a six cylinder oldsmobile at 1030 in
>the morning on a six lane business route....all perfectly legal as it was in
>performance of duty.

        Hey, that isn't what I meant at all. I didn't mean to chide anybody, I
just asked the question, and I meant it more as a remark on what I was
seeing than whether the speed was a problem or not.

Please accept my apologies if anyone was offended.

I remember seeing a bulletin last night explaining SAG-1,2,& 3, but I don't remember the exact wording. I think it was explained that they're sag wagons for some sort of race or run.

I'd like to watch for your tracker -- what SSID do you use?

7 3
Earl

Earl Needham, KD5XB mailto:KD5XB@AMSAT.ORG
Clovis, New Mexico DM84 N34.403 W103.334

677. Solved - New user problem with APRS

From: Bob Oesterlin <oester@us.ibm.com>
Date: Fri, 24 Jul 1998 10:38:10 -0400
To: <aprssig@tapr.org>
Message-ID: <501040002524748900000 2L092*@MHS>
Rendered body type: text/plain

Turned out to be noise on the TNC-Radio connection. After I moved the computer farther away, it all started to work. Now, if I can get my new vertical up this weekend, I should be more visable!

Thanks to all the fine suggestions that I got - what a great group!

Bob
--
Bob Oesterlin, N0EST
Distributed Computing Architecture
IBM Rochester MN oester@us.ibm.com

678. (no subject)

From: Doug Wetzel <dwetzel@earthlink.net>
Date: Fri, 24 Jul 1998 08:18:55 -0700
To: aprssig@tapr.org
Message-ID: <3.0.32.19980724081854.010918c8@earthlink.net>
Rendered body type: text/plain

I have SAG-1 on my map at 96 mph on Leary Street, Earl...which is highly unlikely. I'd take those speed readings with a serious grain of salt!

I've been watching a station identified as "SAG-3" up in Seattle. FB -- I've tracked this station across town via TCP/IP. Only question I have is -- and this was covered not long ago -- is 75 MPH legal on highway 513? Even though I have both Street Atlas 4.0 and Precision Mapping 3.0, the maps do not seem to indicate whether this is a residential area or a freeway.

Doug Wetzel
K7IP
Seattle APRS Coordinator
47 38 00N 122 20 29W
ICQ 164635

dwetzel@earthlink.net

http://home.earthlink.net/~dwetzel

679. Seattle SAGs

From: Doug Wetzel <dwetzel@earthlink.net>
Date: Fri, 24 Jul 1998 08:35:41 -0700
To: aprssig@tapr.org
Message-ID: <3.0.32.19980724083540.00a20ce0@earthlink.net>
Rendered body type: text/plain

Earl's (KD5XB) comment about the SAG bulletin which I sent to the local RF channel (and TCP/IP through the IGATE) reminded me that I should make a formal announcement to the SIG.

Tomorrow and Sunday (July25-26) is the annual Seattle MS150 bicycle rally.

The Northwest APRS Working Group will support the event with six portable trackers, two mobile trackers,four warm bodies, and a partridge in a pear tree, The rally will start at the Boeing plant in Everett, WA (approx 47 55 36N 122 16 46W), run south to Edmonds, WA where the riders will cross Puget Sound by ferry, then following Highway 104 to Port Townsend, WA, stopping there for the evening Saturday.

Sunday's course crosses the Sound again at Port Townsend, then travels north to Coupville, WA on Whidbey Island, then south along Highways 20 and 525 to the ferry terminal at Clinton, WA. Again crossing the Sound, the rally will end at the starting point, the Boeing 747/777 plant in Everett.

Barring technical difficulties, we'll have SAG-1 through 6, a control point in Pt. Townsend, and possibly two portable digis, MSDIG and one yet unidentified.

Please watch us via the IGATE! Starting time is 5:45 am PDT (1245Z).

Doug Wetzel
K7IP
Seattle APRS Coordinator
47 38 00N 122 20 29W
ICQ 164635

dwetzel@earthlink.net

http://home.earthlink.net/~dwetzel

680. Mic-e reports in general

From: Jeff Brenton <jeffb@espi.com>
Date: Fri, 24 Jul 1998 10:57:32 -0500
To: dwetzel@earthlink.net
Cc: aprssig <aprssig@tapr.org>
Message-ID: <35B8AEEC.7608@espi.com>
Rendered body type: text/plain

I'd say that the problem people are seeing with 96mph mobiles in Seattle is probably related to a parsing bug in WinAPRS OR with the Mic-E itself; Steve Dimse's RX-7 quite often zooms around Florida at 300+ MPH, according to WinAPRS!
--

Jeff Brenton, Ham radio call KA9VNV
http://www.espi.com
Questionable web page: http://www.dididahdahdidit.com
Covert supporter of the Vast Right Wing Conspiracy (tm)

681. Re: [APRSSIG:26520] Re: Seattle Mic-E

From: John Dolan <jdolan@erols.com>
Date: Fri, 24 Jul 1998 11:55:11 -0700
To: kd5xb@amsat.org
Cc: APRSSIG@tapr.org
Message-ID: <35B8D88F.46DB@erols.com>
Rendered body type: text/plain

Lighten up Officer... I thought it (Earl's heads up) was interesting, intriguing, and a further incentive for me to get this new APRS aspect of Ham Radio working (any advice welcomed). What software and URL are you using Earl?

While I have your attention Kevin, I can tell you that your police organization will eventually join some of the more civilized ones in clamping down on 140 mile-per-hour mid-morning-cowboys (and interestingly enough, may well do the clamping down via a commercial version of this APRS)

What if you rear-ended a mom dropping off some kids at daycare. Let's say she checked her rearview mirror and pulled out into your lane because at such a high closing speed you were not visible in her teensy mirror at the time she looked. I'd love to have that case in court... Pinnelas County would have to raise taxes for the next two years, to pay the settlement.

In fact, avoiding a situation like your 'land speed record senario' would be financial justification for installing the system, in my book.
--

Regards,

John Dolan
K3FIG
jdolan@erols.com

682. Re: Seattle Mic-E

From: "Paul J. Toth - K2SEC" <ptoth1@tampabay.rr.com>
Date: Fri, 24 Jul 1998 12:42:25 -0400
To: aprssig@tapr.org
Message-ID: <35B8B971.22B0F512@tampabay.rr.com>
Rendered body type: text/plain

Good luck this weekend, Doug, with the MS150. Bike events are a lot of fun to cover with APRS. And it is a real opportunity to show the Tour organizers and the public just how comtemporary Amateur Radio really is!

As for the 96 MPH object....
It is highly UNLIKELY any SAG vehicle was going that fast. Having been the object of one of these "we saw how fast you were going" discussions on this SIG, may I suggest any further discussion focus on what could have caused the speed reporting error and how we can correct the problem? After all, BIG BROTHERS are watching. And their names are Keith and Mark!

73!

Paul J. Toth
K2SEC
West Central Florida SKYWARN Group

683. Re: [APRSSIG:26526] Re: Seattle Mic-E

From: Ray Vaughan <rvaughan@gate.net>
Date: Fri, 24 Jul 1998 13:02:29 -0400
To: ptoth1@tampabay.rr.com, dwetzel@earthlink.net
Cc: aprssig@tapr.org
Message-ID: <1.5.4.32.19980724170229.0095e7fc@pop.gate.net>
Rendered body type: text/plain

At 11:47 AM 7/24/98 -0500, you wrote:
>Good luck this weekend, Doug, with the MS150. Bike events are a lot of
>fun to cover with APRS. And it is a real opportunity to show the Tour
>organizers and the public just how comtemporary Amateur Radio really is!

Just a suggestion from our last MS bike tour:

Most of the riders thought we were a contractor, just like the water guys. Until we talked to them at the camp site, they didn't know we were volunteers too.

Maybe we all need to put up signs on our cars and at the command post:

"Event communication provided by Amateur Radio Volunteers"

And, if at all possible, a video monitor where everyone can see it. Couldn't hurt.

Ray, KD4BBM

684. Re: [APRSSIG:26524] Mic-e reports in general

From: Steve Dimse K4HG <k4hg@tapr.org>
Date: Fri, 24 Jul 1998 13:37:19 -0400
To: <jeffb@espi.com>, "aprssig" <aprssig@tapr.org>
Message-ID: <199807241737.MAA28560@tapr.org>
Rendered body type: text/plain

On 7/24/98 12:01 PM Jeff Brenton (jeffb@espi.com) wrote:

>I'd say that the problem people are seeing with 96mph mobiles in Seattle
>is probably related to a parsing bug in WinAPRS OR with the Mic-E
>itself; Steve Dimse's RX-7 quite often zooms around Florida at 300+ MPH,
>according to WinAPRS!

Well, I do drive a bit agressively, and the RX-7 is a great car, but I can't take all the credit.

The problem is in the Mic-E protocol, which includes characters fron hex 1c through 1f. These are unprimtable ASCII, and they get eaten in the network protocols. Anyone watching me on RF sees me driving normally, anyone watching on the net occasionally sees me drop a charactor, whick produces error in longitude, course, or speed.

Steve K4HG

685. MS-150 Stuff...

From: "Young, Bill" <byoung@cmh.edu>
Date: Fri, 24 Jul 1998 13:17:22 -0500
To: aprssig@tapr.org
Cc: rvaughan@gate.net
Message-ID: <119D55D6D69FD011AB9B000092966BB45EA902@EXCHANGE2>
Rendered body type: text/plain

Ray and the group,

Check with the event organizers before you put a monitor where
everybody/anybody can see it!

While I can't speak for other volunteers and/or groups that help with MS
Society functions, I can tell you that in the Kansas City MS bike rides,
APRS is used not just for the mapping/object location functions, but
also as a "semi-secure" data communications link. In an emergency, APRS
is frequently used to pass "sensitive" traffic that might include
participant names, ages, phone numbers, etc, etc. The accidental
display of this data can cause significant problems for all parties.

I agree that it's great PR for amateur radio in general, and APRS in
particular, if you can show the riders just how extensive (and
impressive!) the communications system that supports them is. Just be
cautious with how it's done to preclude the potential for unintentional
or intentional viewing of sensitive messages and data.

Bill Young
KB0UZQ

 -----Original Message-----
> From: Ray Vaughan [SMTP:rvaughan@gate.net]
> Sent: Friday, July 24, 1998 12:13 PM
> To: aprssig@tapr.org
> Subject: [APRSSIG:26527] Re: Seattle Mic-E
>
> At 11:47 AM 7/24/98 -0500, you wrote:
> >Good luck this weekend, Doug, with the MS150. Bike events are a lot
> of
> >fun to cover with APRS. And it is a real opportunity to show the
> Tour
> >organizers and the public just how comtemporary Amateur Radio really
> is!
>
> Just a suggestion from our last MS bike tour:
>
> Most of the riders thought we were a contractor, just like the water
> guys.
> Until we talked to them at the camp site, they didn't know we were
> volunteers too.
>
> Maybe we all need to put up signs on our cars and at the command post:
>
> "Event communication provided by Amateur Radio Volunteers"
>
> And, if at all possible, a video monitor where everyone can see it.
> Couldn't hurt.
>
> Ray, KD4BBM

686. Re: [APRSSIG:26502] Re: 70cm/9600bps Experiment

From: "Paul J. Toth - K2SEC" <ptoth1@tampabay.rr.com>
Date: Fri, 24 Jul 1998 14:16:33 -0400
To: Ralph Fowler <rwf@BSRG.org>, aprssig@tapr.org
Message-ID: <35B8CF80.10EFD94E@tampabay.rr.com>
Rendered body type: text/plain

Ralph....

That is the crux of the matter...finding a frequency(s) that Hams are willing to
dedicate to the technology and then radios that will operate on those
frequencies. Consensus is becoming more and more difficult to come by these days,
what with many people wanting their own bandwidth or employing a "Not In My
Bandwidth" attitude. Is the right frequency 441.050? 441.150? 441.250?
446.150? None of the above?

I am open to suggestion. Let's put this bandwidth to good use and come up with
something there can be a consensus on.

73!

Paul J. Toth
K2SEC
West Central Florida SKYWARN Group

Ralph Fowler wrote:

> There is-
>
> They just need to get a frequency in the right part of the band.
> They were not in the packet segment of the band plan.
>
> At 08:46 AM 7/23/98 -0500, you wrote:
> >Mike....
> >
> >Congratulations on your efforts. I, for one, would like to see more work
> with APRS
> >on another band that will support higher data throughput. This is one of the
> >factors which, I believe, will help us attract more people to Amateur
> Radio and
> >APRS.
> >
> >Amateur Radio has a history as a place where experimentation and
> improvement of
> >technology has been welcome. It is unfortunate you have encountered
> difficulty
> >securing long term bandwidth to continue the experiment. You would think,
> with 30
> >MHz available, there would be a place for 9600 baud APRS in the 70 cm band.
> >
> >73!
> >
> >Paul J. Toth
> >K2SEC
> >
> >Mike Musick wrote:
> >
> >> A couple of folks in the SIG might remember that, last fall, we embarked
> on an
> >> experiment in the St. Louis area with an APRS network using 9600bps and
> 70cm.
> >> The end configuration was a UHF<=>gateway, a receive-only IP gateway, a
> WIDE
> >> digipeater at a good site, at least one mobile tracker, and two
> fixed-location
> >> users. We're drawing the experiment to a close today.
> >>
> >> I would call the project "a qualified success". From the technical
> standpoint,
> >> it worked. The fixed operations worked very well, although the IP
> gateway site
> >> wasn't very reliable due to antenna location problems. But to our
> surprise, the
> >> tracker also worked well, and performed - as best we could tell - almost
> on par
> >> with the 2m/1200bps network.
> >>
> >> We did experiment with increasing the beacon rate on the mobile to a 30
> sec.
> >> interval, taking advantage of the low channel loading and broader data
> >> bandwidth of the 9600 network. This did give the appearance of better
> tracking
> >> paths than the equivalent 2m mobile. While multipath-induced phase
> errors may
> >> have been a factor in the loss of some individual packets, it was not
> noticed
> >> to be any worse than similar dropout problems in the 2m network. Since
> there
> >> didn't appear to be a meaningful difference between 1200 and 9600
> performance
> >> from the outset, we just concluded empirically that "it worked", and didn't
> >> further quantize the results.
> >>
> >> The "downside" of the experiment was administrative, and is the reason it's

> >> being drawn to a close. Getting an unconflicted 440 channel was not a
> difficult
> >> process, but the understanding that we were free to use the agreed
> frequency
> >> turned out to not be universal. To avoid further misunderstandings we
> elected
> >> to discontinue the project.
> >>
> >>   ...mike/N0QBF
> >>   71301.3106@compuserve.com
> >

--
73!

Paul J. Toth
K2SEC
West Central Florida SKYWARN Group

687. San Antonio, TX

From: "Schwartz, Dave G" <dschwart@exchange.Waterloo.NCR.com>
Date: Fri, 24 Jul 1998 14:52:08 -0400
To: "'APRS SIG'" <aprssig@tapr.org>
Message-ID: <76EFB5E1D14BD111AA180000C0FE0300D8B6FD@53svr17.waterloo.ncr.com>
Rendered body type: text/plain

Thought I'd try to send this even though I'm not getting any mail from the
SIG....

I'm going to be in San Antonio next week (July 27-Aug 1) on business. What
king of APRS activity can I expect to see from my downtown hotel room? If
anybody local sees VA3DGS, send me a message.

.............Dave

NCR: Dave.G.Schwartz@Waterloo.NCR.COM
     NCR Corporation/580 Weber St. N./Waterloo, ON/N2J 4G5, CANADA
     +1-519-884-1710x5701 FAX:+1-519-884-0610 NCRVoicePlus:643-5701
Other: davenpat@kw.igs.net (personal stuff, DoD#=66)
       va3dgs@kwarc.org   (amateur radio stuff, callsign=VA3DGS)

688. Uh -- lighten up?

From: Earl Needham <kd5xb@amsat.org>
Date: Fri, 24 Jul 1998 13:01:49 -0600
To: aprssig@tapr.org
Message-ID: <3.0.3.32.19980724130149.00830100@mail.pdrpip.com>
Rendered body type: text/plain

Hey friends, let's all lighten up a bit on the speed. Perhaps I shouldn't
have mentioned it, and Kevin certainly was civil in his remarks. Whether
we agree with anyone else's view or not isn't a problem. We should all be
able to express an opinion as he did without getting bombarded for it.

        I think the speed aspect of APRS is interesting, fun, and more than likely
subject to anomalies from time to time. Let's not get so hung up on
something that we kill all the FUN out of ham radio.

        Respectfully,
        Earl

689. Re: [APRSSIG:26519] PK-12 Problems

From: Bob Bruninga <bruninga@nadn.navy.mil>
Date: Fri, 24 Jul 1998 15:38:57 -0400 (EDT)
To: Mike Heskett <mheskett@startext.net>
Cc: aprssig@tapr.org
Message-ID: <Pine.SOL.3.96.980724153740.27152F-100000@arctic>
Rendered body type: text/plain

On Fri, 24 Jul 1998, Mike Heskett wrote:

> If you are having problems with a PK-12 not seeing other stations, then
> check the setting of:
>
> BBSMSGS

>
>   I found tha it must be ON for parsing to work correctly. EXP must be On
> as well to allow some of the other changes to be made.

APRS REPLY: True in some cases. Early PK-12's had problems and would
only work with BBSMSGS ON. Later ones worked correctly with BBSMSGS OFF
(the default and the one that assures that it does all things correctly).

bob

690. Re: [APRSSIG:26520] Re: Seattle Mic-E

From: Earl Needham <kd5xb@amsat.org>
Date: Fri, 24 Jul 1998 13:51:47 -0600
To: John Dolan <jdolan@erols.com>
Cc: APRSSIG@tapr.org
Message-ID: <3.0.3.32.19980724135147.009b5170@mail.pdrpip.com>
Rendered body type: text/plain

At 11:55 AM 7/24/98 -0700, John Dolan sent:
<snip>
>What software and URL are you using Earl?

        John, I have several software packages here -- DosAPRS, WinAPRS (both of
which I've registered) and APRS+SA that I've been foolin' around with for a
few days. I connect WinAPRS and APRS+SA via TCP/IP. I'm not using DosAPRS
currently, due to a hardware problem in my computer.

        I'm more familiar with WinAPRS than APRS+SA, so naturally, I get quicker
results with WinAPRS. However, APRS+SA has the ability to automatically
zoom in on a station and scroll the map as the station moves. This is
really nice, and may prompt me to register the program within the next few
weeks.

        As for the URL -- both of these programs have built-in TCP/IP to the
correct server, but the one I use most is www.aprs/net:10151. (I like to
use :10151 instead of :23 when I'm searching for a particular station, as I
get more reports initially.)

        7 3
        Earl

Earl Needham, KD5XB   mailto:KD5XB@AMSAT.ORG
Clovis, New Mexico   DM84 N34.403 W103.334

691. Re: [APRSSIG:26515] APRSSIG digest 1626

From: "a" <dsutton@visi.net>
Date: Fri, 24 Jul 1998 17:56:52 -0400
To: <aprssig@tapr.org>
Message-ID: <000c01bdb74d$f93f9360$edc608d1@dsutton.visi.net>
Rendered body type: text/plain

I Sorry but I think we have enough problems without this is the type
items we need linked to our hobby I hope this will be removed ASAP

Darrell KF4HJW
>Subject: man portable trackers
>Message-ID: <3.0.32.19980723215215.006fc7a0@gena>
>
>http://www.qsl.net/kd4rdb/body.htm
>

692. RE: [APRSSIG:26300] Re: WinAPRS and Precision Mapping

From: John W Wilson <z004391b@bc.seflin.org>
Date: Sat, 25 Jul 1998 07:24:02 -0400 (EDT)
To: Jerry Rector <jerryr@gate.net>
Cc: aprssig@tapr.org
Message-ID: <Pine.3.89.9807250736.A1622-0100000@bc.seflin.org>
Rendered body type: text/plain

WINAprs just doesn't see PM, and there don't seem to be help files about it.

John W. Wilson, KN4HX
z004391b@bcfreenet.seflin.lib.fl.us

On Thu, 16 Jul 1998, Jerry Rector wrote:

> What type of problems are you having...WinAPRS and PM work great here!
> Jerry, KB4OAM
>
> -----Original Message-----
> From: aprssig@tapr.org [mailto:aprssig@tapr.org]On Behalf Of John W
> Wilson
> Sent: Thursday, July 16, 1998 06:30 PM
> To: aprssig@tapr.org
> Subject: [APRSSIG:26300] Re: WinAPRS and Precision Mapping
>
>
> I have had a problem with PM and WinAPRS myself. I don't see a way to
> integrate the mapping software. I thought it was just me, hi.
>
>
> John W. Wilson, KN4HX
> z004391b@bcfreenet.seflin.lib.fl.us
>
>
>
>

693. Re: [APRSSIG:26310] APRS, Fugitives, and trip to NC by KN4HX

From: John W Wilson <z004391b@bc.seflin.org>
Date: Sat, 25 Jul 1998 07:30:50 -0400 (EDT)
To: Ralph Fowler <rwf@bsrg.org>
Cc: aprssig@tapr.org
Message-ID: <Pine.3.89.9807250718.D1622-0100000@bc.seflin.org>
Rendered body type: text/plain

ARG! I didn't change frequencies, and got this message after returning
home. Thanks for the advice though, I will remember next time. Too bad,
but I think it is time to standardise to one frequency just for forgetful
people like me.

John W. Wilson, KN4HX
z004391b@bcfreenet.seflin.lib.fl.us

On Thu, 16 Jul 1998, Ralph Fowler wrote:

> Don't forget to switch to 145.79 when you hit GA and in NC!
> The N4NEQ-3 digi in Andrews NC at 5500 ft should see you in Fontana, as you
> will be right under it. RELAY, WIDE should make you be seen in 4-5 states.
>
>
> Too bad Eric Robert Rudolph doesn't have a tracker- he'd be in full view of
> the digi which is right in the middle of his hideout area.
>
>
> Ralph
> rwf@bsrg.org
>
>
>
> At 10:58 AM 7/16/98 -0500, you wrote:
> >I will be running a tracker on HF and VHF from Fort Lauderdale Florida to
> >Fontana Village in Western North Carolina.
>

694. High Speed travel

From: "Kevin Heyboer" <kd4uyr@gte.net>
Date: Sat, 25 Jul 1998 08:16:48 -0400
To: <aprssig@tapr.org>
Message-ID: <005501bdb7c6$1a26cd00$9df3ffd0@kh>
Rendered body type: text/plain

For those who are apparently appalled that I would consider travelling at such a high speed in traffic.....you might want to ask the deputy I was going to help who was being shot at with a fully automatic AK-47 (full metal jacket .762 rounds) and the citizens who managed to dodge the 74 rounds that were shot whether I should have been going that fast. Oh, and incidently, only one person was hurt in that incident....the suspect, who was DRT from one round.

695. SATFAC?

From: Earl Needham <kd5xb@amsat.org>
Date: Sat, 25 Jul 1998 10:05:27 -0600
To: aprssig@tapr.org

Message-ID: <3.0.3.32.19980725100527.0085f6d0@mail.pdrpip.com>
Rendered body type: text/plain

Could someone give me a short explanation of just what SATFAC is? I don't remember seeing anything about it, however, I'm receiving bulletins from that call. Sounds like something to do with satellites?

Thanks,
Earl

Earl Needham, KD5XB mailto:KD5XB@AMSAT.ORG
Clovis, New Mexico DM84 N34.403 W103.334

696. Kenwood 733a and KPC-3 Operation

From: Greg Higgins <gregh@onramp.net>
Date: Sat, 25 Jul 1998 10:55:30 -1200
To: aprssig@tapr.org
Message-ID: <3.0.5.32.19980725105530.007bd5d0@onramp.net>
Rendered body type: text/plain

I'm sure that this has been discussed previously but I have missed out. I am wanting to run both voice and APRS using the 733a and KPC-3. The dedicated tnc port on the radio is being utilized and everything is working well when the radio is used solely for APRS. Any info would be greatly appreciated!

Greg Higgins KB5GLV

697. IGate POSITs

From: Arte Booten <n2zrc@webspan.net>
Date: Sat, 25 Jul 1998 12:26:47 -0400
To: APRS SIG <aprssig@tapr.org>
Message-ID: <35BA0746.D82AFC7F@webspan.net>
Rendered body type: text/plain

Hi all,

As a user of APRSDos I see lots of stations showing null POSITs due to their sending messages via the I-Gates on my "P" page. This is normal for APRSDos, as it shows that the station was heard but no POSIT has yet been received. Now, I have set one of my alternate paths (O-D-A) to send packets (POSIT, Status, ACKs) via a path that leads through my local I-gate a certain percentage of the time.

I believe such a capability is also possible with WinMacAPRS, but am not sure if this is possible with APRSa+. May I humbly suggest you consider setting such a path? Or would this create too much activity in local VHF nets?

One other little bugaboo I've noticed is that many stations have no contact information in either their POSIT or STATUS packets. Just in case someone needs to get in touch with you it might be a good idea for you to include either your e-mail address, packet BBS address, web page (or all of these) in one of these packets. This way, newbies monitoring the APRS frequency will be able to find out what all that gobbledygook on their terminal screen is about, problems with your station unknown to you could be easily reported and you might make a few more friends in the process. 73
--
Arte Booten <n2zrc@webspan.net> EC/RO for Bronx County, NYC ARES/RACES
PGP Key Fingerprint: 22E5 3EC7 4E3C 2460 C570 BACA E48B 71D5 0F33 54AD
Riverdale, NY [FN30bu] Cruise Missile Coordinates: 4052.71N/07354.06W
TM-V7a/KPC-3 6.0/GPS-III Packet: N2ZRC@KB2VLX.#BRONX.NY.USA.NA

"There is an undetonated Chroniton Torpedo lodged in the hull."
"Do not attempt to disarm it until I arrive." "Arrive quickly!"
-Seven of Nine & Tuvok, Star Trek: Voyager; "Year of Hell"

698. Re: APRS, Fugitives, and trip to NC by KN4HX

From: Cap Pennell <cap@cruzio.com>
Date: Sat, 25 Jul 1998 10:48:31 -0700
To: z004391b@bc.seflin.org, aprssig@tapr.org, aprs@lists.monterey.edu
Message-ID: <3.0.5.32.19980725104831.00899980@mail.cruzio.com>
Rendered body type: text/plain

At 06:35 AM 7/25/98 -0500, John W Wilson wrote:
>ARG! I didn't change frequencies, and got this message after returning
>home. Thanks for the advice though, I will remember next time. Too bad,

>but I think it is time to standardise to one frequency just for forgetful
>people like me.
>John W. Wilson, KN4HX
>z004391b@bcfreenet.seflin.lib.fl.us
>
>
>On Thu, 16 Jul 1998, Ralph Fowler wrote:
>> Don't forget to switch to 145.79 when you hit GA and in NC!
<snip>

Of course, the national "standard" is 144.39! Have patience, John.
73, Cap KE6AFE
--
Cap Pennell
Santa Cruz, CA 95062-1002   3658.93N/12200.91W [CM86xx]
email: cap@cruzio.com   home page: http://members.cruzio.com/~cap
packet radio: KE6AFE @ki6eh.#wcca.ca.usa.noam

699. Re: [APRSSIG:26542] Re: APRS, Fugitives, and trip to NC by KN4HX

From: William Nolle <wa8inz@airnet.net>
Date: Sat, 25 Jul 1998 14:46:49 -0500
To: APRSsig <aprssig@tapr.org>
Message-ID: <35BA3629.43DC4E8@airnet.net>
Rendered body type: text/plain

Cap Pennell wrote:

> At 06:35 AM 7/25/98 -0500, John W Wilson wrote:
> >ARG! I didn't change frequencies, and got this message after returning
> >home. Thanks for the advice though, I will remember next time. Too bad,
> >but I think it is time to standardise to one frequency just for forgetful
> >people like me.
> >John W. Wilson, KN4HX
> >z004391b@bcfreenet.seflin.lib.fl.us
> >
> >
> >On Thu, 16 Jul 1998, Ralph Fowler wrote:
> >> Don't forget to switch to 145.79 when you hit GA and in NC!
> <snip>
>
> Of course, the national "standard" is 144.39! Have patience, John.
> 73, Cap KE6AFE
> --
> Cap Pennell
> Santa Cruz, CA 95062-1002   3658.93N/12200.91W [CM86xx]
> email: cap@cruzio.com   home page: http://members.cruzio.com/~cap
> packet radio: KE6AFE @ki6eh.#wcca.ca.usa.noam

And who made the decision that 144.390 was the national standard?.

--
Bill Nolle wa8inz
wa8inz@airnet.net
wa8inz@amsat.org
Hazel Green, AL

700. Status of S.E. USA QSY

From: Ralph Fowler <rwf@BSRG.org>
Date: Sat, 25 Jul 1998 15:02:54 -0400
To: aprssig@tapr.org
Message-ID: <199807251949.PAA12922@cocacola-bh.cokecce.com>
Rendered body type: text/plain

The APRS digipeater network in the 8 states coordinated by SERA (The South
East Repeater Association), along with the Digis in Central and Northern
Alabama, will be moving to 144.39 MHz on or about Halloween weekend
(October 31) 1998.

We have obtained recognition by SERA for APRS use of the new frequency,
formerly allocated to AMSAT for future Oscar operations. SERA approves our
use of this frequency with one major stipulation: We are to use proper
engineering and RF practices to protect the 145.xx voice repeaters- whose
inputs lie as close as 120 KHz from 144.39. Several digis are co-sited
with these repeaters and others are very close. Our digipeaters must be
outfitted with the proper filtration devices (band pass and notch cavities)
to accomplish this task.

Some digis will need little or no work and others will need total
replacement due to the lowness of the frequency being used, hence the

October date.   This should give the owners ample time to make
adjustments. Cost to the each digipeater owner will range from nothing to
well over $1,000.00 ! If users in the affected areas would like to
contribute to the expenses that their local digipeaters will incur, you may
contact the owner directly or through me.

There are at least 48 digipeaters represented here. Since the approval by
the SERA Board early this month, I have personally corresponded with the
owners of all but 5 of them. After numerous attempts to contact these 5, I
have decided to carry them as unknowns. I think they are all in the
KY-TN-VA area. Of the 43 digis remaining, 5 of them (two in SC and two in
distant GA border areas) elected to not cooperate in the Group effort and
already moved this past Spring- prior to the frequency being approved by
SERA. One more is currently advertising that he plans to move this weekend.

So... there you have it. Throughout history, we in the South have stuck
together on causes that are important to us and have endeavored to always
"do the right thing". We believe that an orderly study of all the
implications of this move has taken place and that the outcome will be
positive for all APRS users.

This leaves one major area, Southern California, to remain on 145.79.
Please be patient with them. The 144.39 frequency is coordinated to another
user community, and there is no place to move those users. The issue is
large and there ARE folks working on it. I know we appreciate the fact
that MOST other users left us alone.

Ralph Fowler N4NEQ
Atlanta, GA
July 25, 1998

rwf@BSRG.org

701. Re: [APRSSIG:26543] Re: APRS, Fugitives, and trip to NC by KN4HX

From: Cap Pennell <cap@cruzio.com>
Date: Sat, 25 Jul 1998 15:02:23 -0700
To: wa8inz@airnet.net, aprssig@tapr.org
Message-ID: <3.0.5.32.19980725150223.00880eb0@mail.cruzio.com>
Rendered body type: text/plain

At 02:52 PM 7/25/98 -0500, William Nolle wrote:
>And who made the decision that 144.390 was the national standard?.

Of course, Bill, the only real standards in APRS operation are those applied by the FCC.
The rest of the APRS "conventions" are merely attempts to be considerate of other amateur operators.
:-)
73, Cap KE6AFE
p.s.   Semantics, who needs 'em? hi
p.p.s. Many thanks to Ralph N4NEQ for announcing the SERA area's QSY plans.
--
Cap Pennell
Santa Cruz, CA 95062-1002   3658.93N/12200.91W [CM86xx]
email: cap@cruzio.com   home page: http://members.cruzio.com/~cap
packet radio: KE6AFE @ki6eh.#wcca.ca.usa.noam

702. Re: IGate POSITs

From: Arte Booten <n2zrc@webspan.net>
Date: Sat, 25 Jul 1998 18:15:08 -0400
To: APRS SIG <aprssig@tapr.org>
Message-ID: <35BA58EB.7A16EE21@webspan.net>
Rendered body type: text/plain

Hi all,

     I seem to remember when I-Gates were first getting started that
Steve recommended we NOT commonly send our POSITs via them. Therefore,
with foot firmly extracted from mouth, I recant my suggestion. Sorry if
I caused any harm to the network. 73
--
Arte Booten <n2zrc@webspan.net> EC/RO for Bronx County, NYC ARES/RACES
PGP Key Fingerprint: 22E5 3EC7 4E3C 2460 C570 BACA E48B 71D5 0F33 54AD
Riverdale, NY [FN30bu]   Cruise Missile Coordinates: 4052.71N/07354.06W
    TM-V7a/KPC-3 6.0/GPS-III Packet: N2ZRC@KB2VLX.#BRONX.NY.USA.NA

   "There is an undetonated Chroniton Torpedo lodged in the hull."
   "Do not attempt to disarm it until I arrive." "Arrive quickly!"
      -Seven of Nine & Tuvok, Star Trek: Voyager; "Year of Hell"

703. Laser Diode help needed

From: n8exf@juno.com (R L BOEHM)
Date: Sat, 25 Jul 1998 18:00:53 -0400
To: aprssig@tapr.org
Message-ID: <19980725.180057.12134.4.N8EXF@juno.com>
Rendered body type: text/plain

Sorry guys, I know this is off the subject, but there is a wealth of info
to be found on this sig...

I have a visible light laser that I cannot find connection info. It has 3
connections.
Thanks in advance.

73 de Bob, N8EXF // KN
homepage   http://www.qsl.net/n8exf

Igloos are polar bear snacks, crunchy on the outside, warm and chewy on
the inside.

_____
You don't need to buy Internet access to use free Internet e-mail.
Get completely free e-mail from Juno at http://www.juno.com
Or call Juno at (800) 654-JUNO [654-5866]

704. Re: [APRSSIG:26544] Status of S.E. USA QSY

From: Wes Johnston <kd4rdb@eagnet.com>
Date: Sat, 25 Jul 1998 20:22:58 -0400
To: rwf@bsrg.org, aprssig@tapr.org
Message-ID: <3.0.32.19980725202237.0068a984@gena>
Rendered body type: text/plain

the Savannah area is now on 144.39. Spun the dial, and tuned the cavity
today. We will soon have our 2nd site up on 144.39, but in the mean time,
it's on 145.79 until the xtals get here. So right now we are serving both
frequencies.

Maybe now we won't be so lonesome... heard charleston sc while at the site
tuning up! Still waiting to see jax.
Wes
Email: mailto:kd4rdb@eagnet.com
AlphaPager: mailto:kd4rdb@eagnet.com - subject line: PAGER
APRS: http://www.qsl.net/kd4rdb/aprs.htm

CAMPER FOR SALE: http://www.qsl.net/kd4rdb/camper.htm

705. Re: [APRSSIG:26546] Re: IGate POSITs

From: Steve Dimse K4HG <k4hg@tapr.org>
Date: Sat, 25 Jul 1998 21:18:52 -0400
To: "Arte Booten" <n2zrc@webspan.net>, "aprssig" <aprssig@tapr.org>
Message-ID: <199807260118.UAA06136@tapr.org>
Rendered body type: text/plain

On 7/25/98 6:20 PM Arte Booten (n2zrc@webspan.net) wrote:

>   I seem to remember when I-Gates were first getting started that
>Steve recommended we NOT commonly send our POSITs via them. Therefore,
>with foot firmly extracted from mouth, I recant my suggestion. Sorry if
>I caused any harm to the network. 73

There is no way for a person to send a posit through an IGate. None of
the IGates respond to a via in the same way HF gates do...they are much
more sophisticated in deciding what goes through. The control is by the
IGate programmer and operator rather than the transmitting station as on
HF.

APRServe and APRS+SA have the ability to gate positions from certain
stations to a local area, under the control of the IGate operator. In
this way, for example, everyone on the Miami LAN gets to see W7LUS-14's
travels...these packets are limited by APRServe to one every 15 minutes.

One posit report will be sent when a station sends a message out through
the IGate. In this way, a posit will get sent every n minutes (APRServe
uses 15) while a station is in QSO via the IGate. This is enough to let
you be seen in a remote area without causing QRM.

You can force a posit to go out on a specific local network by sending a
message to a station in that area. Mac/WinAPRS IGates as well as APRServe
allow you to send messages to, for example digis, for exactly this

reason. APRS+SA IGates prevent this method however, and you would need to
send a message to a specific APRS station in the local area.

Steve K4HG

706. Re: [APRSSIG:26549] Re: IGate POSITs

From: "B. Hildebrand" <bhildebrand@earthlink.net>
Date: Sat, 25 Jul 1998 18:35:09 -0700
To: <k4hg@tapr.org>, <aprssig@tapr.org>
Message-ID: <00b801bdb835$efece860$e6ebd9cf@laptop133>
Rendered body type: text/plain

-----Original Message-----
From: Steve Dimse K4HG <k4hg@tapr.org>
To: aprssig@tapr.org <aprssig@tapr.org>
Date: Saturday, July 25, 1998 6:25 PM
Subject: [APRSSIG:26549] Re: IGate POSITs

>On 7/25/98 6:20 PM Arte Booten (n2zrc@webspan.net) wrote:
>
<<<< SNIP >>>>

>You can force a posit to go out on a specific local network by sending a
>message to a station in that area. Mac/WinAPRS IGates as well as APRServe
>allow you to send messages to, for example digis, for exactly this
>reason. APRS+SA IGates prevent this method however, and you would need to
>send a message to a specific APRS station in the local area.
>
>Steve K4HG
>
APRS+SA does not gate messages to non-computer driven stations, since a
digi will not ACK a message sent to it. A message to a digi for example,
might be sent over and over, since it will never get acknowledged. So to
keep QRM down, APRS+SA does not gate to these kinds of stations Messages
will be gated to any active computer driven station.
..
BH, KH2Z
>

707. Re: help in Tallahassee

From: Bob Bruninga <bruninga@nadn.navy.mil>
Date: Sat, 25 Jul 1998 23:45:05 -0400 (EDT)
To: Ke4osu@aol.com
Cc: aprssig@tapr.org
Message-ID: <Pine.SOL.3.96.980725234328.11731E-100000@arctic>
Rendered body type: text/plain

ANyone in Talahassee can help this gent? I know there is activity to the
west of him, but not sure about talahassee...   John, lets see if anyone
steps forward...

On Sat, 25 Jul 1998 Ke4osu@aol.com wrote:

>   hello and thanks in advance for your time. I'm not having
> any luck getting apars software or any info on the subject in my area any help
> or advice would be great.
>   thanks john ke4osu

708. NJ Mile Markers

From: Bob Bruninga <bruninga@nadn.navy.mil>
Date: Sun, 26 Jul 1998 00:14:40 -0400 (EDT)
To: aprssig@tapr.org
Message-ID: <Pine.SOL.3.96.980726000808.11731O-100000@arctic>
Rendered body type: text/plain

One of the main arteries on the East coast is the NJ Turnpike. I need a
few mile marker references to add it to my database.   Here is what I need
from the next person that happens to be driving along it. NO GPS NEEDED!
Here are the answers I need:

1) Does MM 0 correspond with the first TOll plaza (I assume YES)
2) Need MM nearest to exit 4
3) Need MM nearest to exit 8
4) Need MM nearest to exit 9
5) Need MM nearest to exit 12
6) Need MM nearest to exit 18

Thanks. W2HOB gave me the LAT/LONGS already. Just need milemarker.
Fractional MM is just fine...

APRSdos REPLY/COMMENT:

Reply mail addr: wb4apr@amsat.org
US mail address: 115 old Farm Ct, Glen Burnie, MD 21060
See DAYTON97 HISTORY: http://web.usna.navy.mil/~bruninga/dayton.html
See Maryland APRS LIVE: http://web.usna.navy.mil/~bruninga/aprs.html
See GPS on ANY radio: http://www.tapr.org/tapr/html/mic-e.html

709. battery water

From: "J.B. Weazle McCreath" <weazle@hurontel.on.ca>
Date: Sun, 26 Jul 1998 08:41:21 -0400 (EDT)
To: aprssig@tapr.org
Message-ID: <199807261241.IAA01933@mail.hurontel.on.ca>
Rendered body type: text/plain

Hello fellow APRS users:

My entire shack, including the computer for APRS, is run from solar power.
I have a bank of 60 nicad batteries that are charged from an array on the
roof, and provide power at night. I need to top up the water in them from
time to time, and was wondering if anyone could tell me FOR SURE if the
water from a de-humidifier is the same as distilled water? Would it be
safe to use it in the batteries? Needless to say, I want a definate yes
or no to this question, as I don't want to jeopardize my rather expensive
battery bank. All the battery manufacturer says is to use distilled water.

Tnx & 73, Weazle.

J.B. Weazle McCreath, VE3EAR   http://www.solwind.on.ca
c/o Solwind Enerco Inc.,   ve3ear@rac.ca
Aerial Acres, R.R. 4,   tel (519) 524-8703 - office
Goderich, ON., Canada   tel (519) 524-7420 - home
N7A 3Y1   fax (519) 524-6108

710. Re: [APRSSIG:26553] battery water

From: Doug Woodruff <w4law@mindspring.com>
Date: Sun, 26 Jul 1998 09:28:29 -0400
To: weazle@hurontel.on.ca
Cc: aprssig@tapr.org
Message-ID: <35BB2EFD.ACF52F1C@mindspring.com>
Rendered body type: text/plain

J.B. Weazle McCreath wrote:

> Hello fellow APRS users:
>
> My entire shack, including the computer for APRS, is run from solar power.
> I have a bank of 60 nicad batteries that are charged from an array on the
> roof, and provide power at night. I need to top up the water in them from
> time to time, and was wondering if anyone could tell me FOR SURE if the
> water from a de-humidifier is the same as distilled water? Would it be
> safe to use it in the batteries? Needless to say, I want a definate yes
> or no to this question, as I don't want to jeopardize my rather expensive
> battery bank. All the battery manufacturer says is to use distilled water.
>
> Tnx & 73, Weazle.
>
> J.B. Weazle McCreath, VE3EAR   http://www.solwind.on.ca
> c/o Solwind Enerco Inc.,   ve3ear@rac.ca
> Aerial Acres, R.R. 4,   tel (519) 524-8703 - office
> Goderich, ON., Canada   tel (519) 524-7420 - home
> N7A 3Y1   fax (519) 524-6108

Well, technically it is distilled but . . .

I guess I would be concerned about chemical contaminants leaching off the coils
of the dehumidifier or particulate contaminants being in the water by virtue of
their presence on the coils -- anything in the air is sucked through the coils
by the fan.

--
Doug, W4LAW

mailto:w4law@mindspring.com

http://www.mindspring.com/~w4law/
or
mailto:w4law@ares-races.org
http://www.ares-races.org/

711. Re: [APRSSIG:26538] High Speed travel

From: Richard Albee <raade@dixie-net.com>
Date: Sun, 26 Jul 1998 08:59:00 -0500
To: kd4uyr@gte.net
Cc: aprssig@tapr.org
Message-ID: <l03102800b1e0a0b05296@[209.136.165.104]>
Rendered body type: text/plain

At 7:22 AM -0500 7/25/98, Kevin Heyboer wrote:
>------=_NextPart_000_0052_01BDB7A4.91E70D40
>Content-Type: text/plain
>
>For those who are apparently appalled that I would consider travelling at
>such a high speed in traffic.....you might want to ask the deputy I was
>going to help who was being shot at with a fully automatic AK-47 (full
>metal jacket .762 rounds) and the citizens who managed to dodge the 74
>rounds that were shot whether I should have been going that fast. Oh, and
>incidently, only one person was hurt in that incident....the suspect, who
>was DRT from one round.
>
>------extPart_000_0052_01BDB7A4.91E70D40
>Content-Type: text/html;
>   charsetso-8859-1"
>Content-Transfer-Encoding: quoted-printable
>
><!DOCTYPE HTML PUBLIC "-//W3C//DTD W3 HTML//EN">
><HTML>
><HEAD>
>
><META content=text/html;charset=iso-8859-1 http-equiv=Content-Type>
><META content='"MSHTML 4.72.3110.7"' name=GENERATOR>
></HEAD>
><BODY bgColor=#ffffff>
><DIV><FONT color=#000000 size=2>For those who are apparently appalled that I
>would consider travelling at such a high speed in traffic.....you might
>want to
>ask the deputy I was going to help who was being shot at with a fully
>automatic
>AK-47 (full metal jacket .762 rounds) and the citizens who managed to
>dodge the
>74 rounds that were shot whether I should have been going that fast.
>Oh,
>and incidently, only one person was hurt in that incident....the suspect, who
>was DRT from one round.</FONT></DIV></BODY></HTML>
>
>------extPart_000_0052_01BDB7A4.91E70D40--

turn off your E-Mail

Richard

712. Re: [APRSSIG:26553] battery water

From: "Bob Hart" <rahart@hctc.com>
Date: Sun, 26 Jul 1998 06:56:59 -0700
To: <weazle@hurontel.on.ca>, <aprssig@tapr.org>
Message-ID: <01bdb89d$42723880$3ba819d0@desktop>
Rendered body type: text/plain

-----Original Message-----
From: J.B. Weazle McCreath <weazle@hurontel.on.ca>
To: aprssig@tapr.org <aprssig@tapr.org>
Date: Sunday, July 26, 1998 4:50 AM
Subject: [APRSSIG:26553] battery water

:
>
>My entire shack, including the computer for APRS, is run from solar
power.
>I have a bank of 60 nicad batteries that are charged from an array on
the
>roof, and provide power at night. I need to top up the water in them
from

>time to time, and was wondering if anyone could tell me FOR SURE if
the
>water from a de-humidifier is the same as distilled water? Would it
be
>safe to use it in the batteries? .
>
>Tnx & 73, Weazle.
>

Hi Weazle, I have much the same setup, but in my motorhome. It has
been in service since 1984.

Yes, your dehumidifier is essentially a still, but the drain is
probably not filtered. You may have dirt, cat hair, and all sorts of
junk in the water. Considering my investment in batteries, I live it
up a spend 89 cents a gallon for distilled water at the supermarket.
Just to bolster your confidence in the product, it's the same water my
dentist uses for hygenic purposes.

Bob Hart
wa7hra
Hoodsport, WA

713. alinco 582

From: "Guy Story, KC5GOI" <kc5goi@infospeedway.net>
Date: Sun, 26 Jul 1998 10:41:43 -0500
To: "APRSSIG" <aprssig@tapr.org>
Message-ID: <01bdb8ab$e3cca540$67cf2bcf@guy->
Rendered body type: text/plain

Hello everyone, got a question. Need to know if anyone has tried to
interface a mic-e to an ALinco dj580 or 582? I need to get the values for
the RC network. The PTT and the TX Audio are on the same pin. I am using a
mobile rig on my mic-e now but when I go to Chicago for hte DCC I want to
use my ht. The mobile rig stays in hte truck and te ht sees use in the car.
I can use the same values for the RS 202 but would rather have more correct
values.
Thanks and 73
Guy Story, KC5GOI
Silver Dome Mobile Pk. # 79
Denton Texas, 76208
940.243.0754
kc5goi@infospeedway.net
www.infospeedway.net/~kc5goi/home.htm

714. Re: [APRSSIG:26553] battery water

From: Ken Wise KE6QNK <kwise@california.com>
Date: Sun, 26 Jul 1998 08:44:26
To: aprssig@tapr.org
Message-ID: <3.0.5.16.19980726084426.3c477c8c@global.california.com>
Rendered body type: text/plain

At 07:40 7/26/98 -0500, you wrote:
>Hello fellow APRS users:
>
>My entire shack, including the computer for APRS, is run from solar power.
>I have a bank of 60 nicad batteries that are charged from an array on the
snip
>Tnx & 73, Weazle.

Hmmm ....Water for nicads??

****
Ken Wise.............Amature Radio Station KE6QNK QTH Concord Ca.
Internet Email.......kenw17@juno.com or kwise@california.com
Packet Mail Address..KE6QNK@KB6AML.CA.USA.NA
Snail Mail address...P.O. Box 60   Concord, Ca. 94522-0060
WWW Page.............www.california.com/~kwise
ICQ#.................2015687 need icq? ... goto www.mirabilis.com
****

715. My Kam is sick!

From: Glenn Wiebe <gswiebe@mb.sympatico.ca>
Date: Sun, 26 Jul 1998 10:56:42 -0700
To: aprssig@tapr.org
Message-ID: <35BB6DDA.47C50A29@mb.sympatico.ca>
Rendered body type: text/plain

Hi all:

When I fired up my station this morning, the Kam (with enhancement board, v8.0) came back with graphic characters rather then the usual 'plain english' message. Likewise when I send it commands it responds but with gibberish. Incoming text causes the front panel lights to do their thing but it does not make it to the screen, readable or otherwise. I have done several hard resets and tried two different programs to communicate with the beast. It does not go through the abaud routine on power-up. Any suggestions?

Thanks.....Glenn

--
Glenn Wiebe...Box 1563...Beausejour...MB...Canada...R0E 0C0
Email: gswiebe@mb.sympatico.ca.....ham radio call sign: VE4GN
Packet address: ve4gn@ve4ua.#wpg.mb.ca.noam

716. Re: [APRSSIG:26553] battery water

From: "Greg Harbaugh" <n3nri@innernet.net>
Date: Sat, 25 Jul 1998 18:21:13 -0400
To: <weazle@hurontel.on.ca>, <aprssig@tapr.org>
Message-ID: <000c01bdb81a$89df1180$974940d1@n3nri>
Rendered body type: text/plain

Like was already said, Id worry about contamination. You can buy distilled water at the grocery store cheap...But I have a question, how do you put water in Ni-Cad batteries??? I think you have lead acid, as they would take water. If you are using lead acid, make sure that the battery room or containers are vented to outside!! As they charge they give off hydrogen gas...very explosive!! If they are Gel-Cel type, you do not add water to them either!!
Greg

-----Original Message-----
From: J.B. Weazle McCreath <weazle@hurontel.on.ca>
To: aprssig@tapr.org <aprssig@tapr.org>
Date: Sunday, July 26, 1998 9:02 AM
Subject: [APRSSIG:26553] battery water

>Hello fellow APRS users:
>
>My entire shack, including the computer for APRS, is run from solar power.
>I have a bank of 60 nicad batteries that are charged from an array on the
>roof, and provide power at night. I need to top up the water in them from
>time to time, and was wondering if anyone could tell me FOR SURE if the
>water from a de-humidifier is the same as distilled water? Would it be
>safe to use it in the batteries? Needless to say, I want a definate yes
>or no to this question, as I don't want to jeopardize my rather expensive
>battery bank. All the battery manufacturer says is to use distilled water.
>
>Tnx & 73, Weazle.
>
>J.B. Weazle McCreath, VE3EAR http://www.solwind.on.ca
>c/o Solwind Enerco Inc., ve3ear@rac.ca
>Aerial Acres, R.R. 4, tel (519) 524-8703 - office
>Goderich, ON., Canada tel (519) 524-7420 - home
>N7A 3Y1 fax (519) 524-6108
>
>
>
>

717. Re: [APRSSIG:26556] Re: battery water

From: Stephen Vinson <kd4wiw@ipass.net>
Date: Sun, 26 Jul 1998 12:18:35 -0700
To: rahart@hctc.com
Cc: aprssig@tapr.org

Message-ID: <35BB810B.1D30@ipass.net>
Rendered body type: text/plain

Bob Hart wrote:
>
> -----Original Message-----
> From: J.B. Weazle McCreath <weazle@hurontel.on.ca>
> To: aprssig@tapr.org <aprssig@tapr.org>
> Date: Sunday, July 26, 1998 4:50 AM
> Subject: [APRSSIG:26553] battery water
>
> :
> >
> >My entire shack, including the computer for APRS, is run from solar
> power.
> >I have a bank of 60 nicad batteries that are charged from an array on
> the
> >roof, and provide power at night. I need to top up the water in them
> from
> >time to time, and was wondering if anyone could tell me FOR SURE if
> the
> >water from a de-humidifier is the same as distilled water? Would it
> be
> >safe to use it in the batteries? .
> >
> >Tnx & 73, Weazle.
> >
>
> Hi Weazle, I have much the same setup, but in my motorhome. It has
> been in service since 1984.
>
> Yes, your dehumidifier is essentially a still, but the drain is
> probably not filtered. You may have dirt, cat hair, and all sorts of
> junk in the water. Considering my investment in batteries, I live it
> up a spend 89 cents a gallon for distilled water at the supermarket.
> Just to bolster your confidence in the product, it's the same water my
> dentist uses for hygenic purposes.
>
> Bob Hart
> wa7hra
> Hoodsport, WA

Weazle ... Yes Bob is right but I would go one step forward. My parents
just told me about a galv strip that is installed on your roof at the
ridge vent. As rain falls on it and runs down the shingles it carrys
with it some zinc ions and mold and mildew will not grow on your
shingles. With this being the case the water collecting on the galv
fins of the de-humidifier may also bleed off some zinc ions. Before you
use the water filter it thur an resin ionization filter. You can find
them at most hardware stores.

I may be completely off base but I was not aware of the zinc (galv)
strip being used in the roofing industry until recently. If it is a
factor I'm not sure what it would do to the sulfuris acid of lead and
zinc plates in the battery. Anyone out there have a comment?

Good luck ...

Steve
KD4WIW
--
==
E-mail: kd4wiw@ipass.net
Home Page: http://www.ipass.net/~kd4wiw
Packet: KD4WIW@W4RAL.#RTP.NC.USA.NOAM
==
       TOWERS ARE BEAUTIFUL !!!!
==

718. Re: [APRSSIG:26559] My Kam is sick!

From: assib@imap1.asu.edu
Date: Sun, 26 Jul 1998 09:31:15 -0700 (MST)
To: Glenn Wiebe <gswiebe@mb.sympatico.ca>
Cc: aprssig@tapr.org
Message-ID: <Pine.GSO.3.96.980726092834.3467A-100000@email1.asu.edu>
Rendered body type: text/plain

The Kam has a very frequent desease. The capacitors on the -5V regulator dry
up and the TNC does exactly what you described. I have already fixed a couple
of those with the very same problem.

Open up the TNC, and check to see if you have the -5V supply. The DC/DC is
located on the front side of the TNC.
bye, Assi

On Sun, 26 Jul 1998, Glenn Wiebe wrote:

> Hi all:
>
> When I fired up my station this morning, the Kam (with enhancement
> board, v8.0) came back with graphic characters rather then the usual
> 'plain english' message. Likewise when I send it commands it responds
> but with gibberish. Incoming text causes the front panel lights to do
> their thing but it does not make it to the screen, readable or
> otherwise. I have done several hard resets and tried two different
> programs to communicate with the beast. It does not go through the abaud
> routine on power-up. Any suggestions?
>
> Thanks.....Glenn
>
> --
> Glenn Wiebe...Box 1563...Beausejour...MB...Canada...R0E 0C0
> Email: gswiebe@mb.sympatico.ca.....ham radio call sign: VE4GN
> Packet address: ve4gn@ve4ua.#wpg.mb.ca.noam
>
>

     Assi Friedman, 4X1KX/KK7KX Arizona State University
                  "The Truth Is Out There"
Tel: 602-844-1458 (home)
Tel: 602-965-2474 (ASUsat lab)
Fax: 602-965-0277 (ASUsat lab)
Email: assib@asu.edu
Home Page: http://www.public.asu.edu/~assib
ASUSat Page: http://www.eas.asu.edu/~nasasg/asusat/asusat.html
---

719. Re: [APRSSIG:26560] Re: battery water

From: Earl Needham <kd5xb@amsat.org>
Date: Sun, 26 Jul 1998 10:45:39 -0600
To: aprssig@tapr.org
Message-ID: <3.0.3.32.19980726104539.008c1170@mail.pdrpip.com>
Rendered body type: text/plain

At 11:14 AM 7/26/98 -0500, Greg Harbaugh sent:
<snip>
>But I have a
>question, how do you put water in Ni-Cad batteries??? I think you
>have lead acid, as they would take water.

        As I just sent someone else in private email, almost any nicad battery
bigger than a D cell will take water. I've been an aircraft electrician in
the military since 1977, and all the aircraft batteries I've ever seen are
nicads and have individually replaceable cells with caps on top to adjust
the "water" level.
        The electrolyte in nicads is potassium hydroxide, and it's nasty stuff.
However, unlike the acid in lead-acid batteries, the electrolyte in nicads
is alkaline.

        7 3
        Earl

Earl Needham, KD5XB   mailto:KD5XB@AMSAT.ORG
Clovis, New Mexico   DM84 N34.403 W103.334

720. Re: [APRSSIG:26558] Re: battery water

From: "O.C. Winton wn1z" <wn1z@sojourner.wn1z.ampr.org>
Date: Sun, 26 Jul 1998 12:19:35 -0700
To: kwise@california.com, aprssig@tapr.org
Message-ID: <6974@babylon.wn1z.ampr.org>
Rendered body type: text/plain

At 10:51 AM 7/26/98 -0500, Ken Wise KE6QNK wrote:
>
>Hmmm ....Water for nicads??

You mean you've never seen a wet-cell NiCd?

Orrin wn1z
in foggy Monterey CA

721. [APRSSIG:26562] Re: My Kam is sick!

From: "Tedd Doda" <lazer@sentex.net>
Date: Sun, 26 Jul 1998 17:16:00 -0500
To: "aprssig@tapr.org" <aprssig@tapr.org>
Message-ID: <199807262115.RAA28022@granite.sentex.net>
Rendered body type: text/plain

On Sun, 26 Jul 1998 11:08:07 -0500 (CDT), Glenn Wiebe wrote:

>I have done several hard resets and tried two different
>programs to communicate with the beast. It does not go through the abaud
>routine on power-up. Any suggestions?

Try a "real" power supply. I've seen the Power cube (wall-wart) die
slowly, caused by the seccondary winding shorting out. The more they
short out, the less voltage you have available out to your TNC.

Tedd Doda
packet va3sed@va3sed
e-mail lazer@sentex.net

722. Re: [APRSSIG:26553] battery water

From: Bobbbe@aol.com
Date: Sun, 26 Jul 1998 18:00:39 EDT
To: weazle@hurontel.on.ca, aprssig@tapr.org
Message-ID: <1a89eff3.35bba708@aol.com>
Rendered body type: text/plain

In a message dated 7/26/98 8:03:58 AM, weazle@hurontel.on.ca wrote:

>My entire shack, including the computer for APRS, is run from solar power.
>I have a bank of 60 nicad batteries that are charged from an array on the
>roof, and provide power at night. I need to top up the water in them from
>time to time, and was wondering if anyone could tell me FOR SURE if the
>water from a de-humidifier is the same as distilled water? Would it be
>safe to use it in the batteries? Needless to say, I want a definate yes
>or no to this question, as I don't want to jeopardize my rather expensive
>battery bank. All the battery manufacturer says is to use distilled water.

Dont forget about airborne contaminants.

wd9bbe

723. Re: [APRSSIG:26559] My Kam is sick!

From: kd4emi@juno.com (Michael A Kantor)
Date: Sun, 26 Jul 1998 20:39:04 -0400
To: gswiebe@mb.sympatico.ca
Cc: aprssig@tapr.org
Message-ID: <19980726.204009.4526.0.kd4emi@juno.com>
Rendered body type: text/plain

On Sun, 26 Jul 1998 11:06:04 -0500 (CDT) Glenn Wiebe
<gswiebe@mb.sympatico.ca> writes:
>Hi all:
>
>When I fired up my station this morning, the Kam (with enhancement
>SNIP
>routine on power-up. Any suggestions?
>
>Thanks.....Glenn

Yes open it up, and reseat the enhancement board. Make sure the board is
in there
real well. Tap the board to see if the lights change at all..
Mike

_____
You don't need to buy Internet access to use free Internet e-mail.
Get completely free e-mail from Juno at http://www.juno.com
Or call Juno at (800) 654-JUNO [654-5866]

724. THANKS TO ALL

From: "J.B. Weazle McCreath" <weazle@hurontel.on.ca>
Date: Sun, 26 Jul 1998 21:01:14 -0400 (EDT)

To: aprssig@tapr.org
Message-ID: <199807270101.VAA01987@mail.hurontel.on.ca>
Rendered body type: text/plain

To those who took the time to respond to my query about using de-humidifier water in my nicads, thank you very much. I got more than twenty replies and you all told me the same thing...DON'T DO IT!

Some of you wondered about the cells...they are surplus industrial grade units made by Saft in France, rated at 45 A/H, and are about four inches square and a foot high. They have a flip top vent for checking the level of the electrolyte and topping up as needed.

Thanks again, 73, Weazle.

J.B. Weazle McCreath, VE3EAR
c/o Solwind Enerco Inc.,
Aerial Acres, R.R. 4,
Goderich, ON., Canada
N7A 3Y1

http://www.solwind.on.ca
ve3ear@rac.ca
tel (519) 524-8703 - office
tel (519) 524-7420 - home
fax (519) 524-6108

725. GPS30PC For Sale

From: Doug Woodruff <w4law@mindspring.com>
Date: Sun, 26 Jul 1998 21:35:52 -0400
To: aprssig@tapr.org
Message-ID: <35BBD977.7FAD6C81@mindspring.com>
Rendered body type: text/plain

I have a Garmin GPS30PC which I no longer need for sale -- $75.00 shipped CONUS. This unit has all attachments (mag mnt & suction cup mnt) and documentation.

This unit was fully functional the last time I had it on about a week ago.

--
Doug, W4LAW

mailto:w4law@mindspring.com
http://www.mindspring.com/~w4law/
or
mailto:w4law@ares-races.org
http://www.ares-races.org/

726. GPS III Speed Limitation?

From: "Richard Garcia" <k4gps@bellsouth.net>
Date: Sun, 26 Jul 1998 22:06:28 +0000
To: aprssig@tapr.org
Message-ID: <199807270206.WAA11721@mail.mia.bellsouth.net>
Rendered body type: text/plain

Is anyone aware of a speed limitation on the GPS III from Garmin ? I tried my new one today up to 95mph <grin> and it still worked well. This was on very desolate strech of road on a very long and boring trip. I would rather not test it out any further but am curious if I can use it on aircraft.

I got burned long ago, I'm the one who first figured out that non AERO Garmins are limited in speed. That is AFTER I set up a station in a 172 and decided to take it for a trip with a friend!

k4gps@bellsouth.net Ex: N2CZF KA2FXA
Jupiter Farms FL.
http://aprs.florida.net
http://www.radiotronics.com

727. Re: [APRSSIG:26552] APRSSIG digest 1628

From: "Douglas P. Dotson" <ddotson@clark.net>
Date: Sun, 26 Jul 1998 20:49:31 -0400
To: aprssig@tapr.org
Message-ID: <35BBCE9B.51CD5A95@clark.net>
Rendered body type: text/plain

How do i get off this list???????

tnx,
dug

aprssig@tapr.org wrote:

> APRSSIG Digest 1628
>
> Topics covered in this issue include:
>
> 1) Re: WinAPRS and Precision Mapping
> by John W Wilson <z004391b@bc.seflin.org>
> 2) Re: APRS, Fugitives, and trip to NC by KN4HX
> by John W Wilson <z004391b@bc.seflin.org>
> 3) High Speed travel
> by "Kevin Heyboer" <kd4uyr@gte.net>
> 4) SATFAC?
> by Earl Needham <kd5xb@amsat.org>
> 5) Kenwood 733a and KPC-3 Operation
> by Greg Higgins <gregh@onramp.net>
> 6) IGate POSITs
> by Arte Booten <n2zrc@webspan.net>
> 7) Re: APRS, Fugitives, and trip to NC by KN4HX
> by Cap Pennell <cap@cruzio.com>
> 8) Re: APRS, Fugitives, and trip to NC by KN4HX
> by William Nolle <wa8inz@airnet.net>
> 9) Status of S.E. USA QSY
> by Ralph Fowler <rwf@BSRG.org>
> 10) Re: APRS, Fugitives, and trip to NC by
> by Cap Pennell <cap@cruzio.com>
> 11) Re: IGate POSITs
> by Arte Booten <n2zrc@webspan.net>
> 12) Laser Diode help needed
> by n8exf@juno.com (R L BOEHM)
> 13) Re: Status of S.E. USA QSY
> by Wes Johnston <kd4rdb@eagnet.com>
> 14) Re: IGate POSITs
> by Steve Dimse K4HG <k4hg@tapr.org>
> 15) Re: IGate POSITs
> by "B. Hildebrand" <bhildebrand@earthlink.net>
> 16) Re: help in Tallahassee
> by Bob Bruninga <bruninga@nadn.navy.mil>
> 17) NJ Mile Markers
> by Bob Bruninga <bruninga@nadn.navy.mil>
>
> --
>
> Date: Sat, 25 Jul 1998 07:24:02 -0400 (EDT)
> From: John W Wilson <z004391b@bc.seflin.org>
> To: Jerry Rector <jerryr@gate.net>
> Subject: Re: WinAPRS and Precision Mapping
> Message-ID: <Pine.3.89.9807250736.A1622-0100000@bc.seflin.org>
>
> WINAprs just doesn't see PM, and there don't seem to be help files about it.
>
> John W. Wilson, KN4HX
> z004391b@bcfreenet.seflin.lib.fl.us
>
> On Thu, 16 Jul 1998, Jerry Rector wrote:
>
> > What type of problems are you having...WinAPRS and PM work great here!
> > Jerry, KB4OAM
> >
> > -----Original Message-----
> > From: aprssig@tapr.org [mailto:aprssig@tapr.org]On Behalf Of John W
> > Wilson
> > Sent: Thursday, July 16, 1998 06:30 PM
> > To: aprssig@tapr.org
> > Subject: [APRSSIG:26300] Re: WinAPRS and Precision Mapping
> >
> >
> > I have had a problem with PM and WinAPRS myself. I don't see a way to
> > integrate the mapping software. I thought it was just me, hi.
> >
> >
> > John W. Wilson, KN4HX
> > z004391b@bcfreenet.seflin.lib.fl.us
> >
> >
> >
> >
>

> ------------------------------
>
> Date: Sat, 25 Jul 1998 07:30:50 -0400 (EDT)
> From: John W Wilson <z004391b@bc.seflin.org>
> To: Ralph Fowler <rwf@bsrg.org>
> Subject: Re: APRS, Fugitives, and trip to NC by KN4HX
> Message-ID: <Pine.3.89.9807250718.D1622-0100000@bc.seflin.org>
>
> ARG! I didn't change frequencies, and got this message after returning
> home. Thanks for the advice though, I will remember next time. Too bad,
> but I think it is time to standardise to one frequency just for forgetful
> people like me.
>
> John W. Wilson, KN4HX
> z004391b@bcfreenet.seflin.lib.fl.us
>
> On Thu, 16 Jul 1998, Ralph Fowler wrote:
>
> > Don't forget to switch to 145.79 when you hit GA and in NC!
> > The N4NEQ-3 digi in Andrews NC at 5500 ft should see you in Fontana, as you
> > will be right under it. RELAY, WIDE should make you be seen in 4-5 states.
> >
> >
> > Too bad Eric Robert Rudolph doesn't have a tracker- he'd be in full view of
> > the digi which is right in the middle of his hideout area.
> >
> >
> > Ralph
> > rwf@bsrg.org
> >
> >
> >
> > At 10:58 AM 7/16/98 -0500, you wrote:
> > >I will be running a tracker on HF and VHF from Fort Lauderdale Florida to
> > >Fontana Village in Western North Carolina.
> >
>
> ------------------------------
>
> Date: Sat, 25 Jul 1998 08:16:48 -0400
> From: "Kevin Heyboer" <kd4uyr@gte.net>
> To: <aprssig@tapr.org>
> Subject: High Speed travel
> Message-ID: <005501bdb7c6$1a26cd00$9df3ffd0@kh>
>
> This is a multi-part message in MIME format.
>
> ------=_NextPart_000_0052_01BDB7A4.91E70D40
> Content-Type: text/plain;
>   charset="iso-8859-1"
> Content-Transfer-Encoding: quoted-printable
>
> For those who are apparently appalled that I would consider travelling =
> at such a high speed in traffic.....you might want to ask the deputy I =
> was going to help who was being shot at with a fully automatic AK-47 =
> (full metal jacket .762 rounds) and the citizens who managed to dodge =
> the 74 rounds that were shot whether I should have been going that fast. =
> Oh, and incidently, only one person was hurt in that incident....the =
> suspect, who was DRT from one round.
>
> ------=_NextPart_000_0052_01BDB7A4.91E70D40
> Content-Type: text/html;
>   charset="iso-8859-1"
> Content-Transfer-Encoding: quoted-printable
>
> <!DOCTYPE HTML PUBLIC "-//W3C//DTD W3 HTML//EN">
> <HTML>
> <HEAD>
>
> <META content=3Dtext/html;charset=3Diso-8859-1 =
> http-equiv=3DContent-Type>
> <META content=3D'"MSHTML 4.72.3110.7"' name=3DGENERATOR>
> </HEAD>
> <BODY bgColor=3D#ffffff>
> <DIV><FONT color=3D#000000 size=3D2>For those who are apparently =
> appalled that I=20
> would consider travelling at such a high speed in traffic.....you might =
> want to=20
> ask the deputy I was going to help who was being shot at with a fully =

> automatic=20
> AK-47 (full metal jacket .762 rounds) and the citizens who managed to =
> dodge the=20
> 74 rounds that were shot whether I should have been going that =
> fast. Oh,=20
> and incidently, only one person was hurt in that incident....the =
> suspect, who=20
> was DRT from one round.</FONT></DIV></BODY></HTML>
>
> ------=_NextPart_000_0052_01BDB7A4.91E70D40--
>
> ------------------------------
>
> Date: Sat, 25 Jul 1998 10:05:27 -0600
> From: Earl Needham <kd5xb@amsat.org>
> To: aprssig@tapr.org
> Subject: SATFAC?
> Message-ID: <3.0.3.32.19980725100527.0085f6d0@mail.pdrpip.com>
>
>   Could someone give me a short explanation of just what SATFAC is? I don't
> remember seeing anything about it, however, I'm receiving bulletins from
> that call. Sounds like something to do with satellites?
>
>   Thanks,
>   Earl
>
> Earl Needham, KD5XB   mailto:KD5XB@AMSAT.ORG
> Clovis, New Mexico   DM84 N34.403 W103.334
>
> ------------------------------
>
> Date: Sat, 25 Jul 1998 10:55:30 -1200
> From: Greg Higgins <gregh@onramp.net>
> To: aprssig@tapr.org
> Subject: Kenwood 733a and KPC-3 Operation
> Message-ID: <3.0.5.32.19980725105530.007bd5d0@onramp.net>
>
> I'm sure that this has been discussed previously but I have missed out. I
> am wanting to run both voice and APRS using the 733a and KPC-3. The
> dedicated tnc port on the radio is being utilized and everything is working
> well when the radio is used solely for APRS. Any info would be greatly
> appreciated!
>
> Greg Higgins KB5GLV
>
> ------------------------------
>
> Date: Sat, 25 Jul 1998 12:26:47 -0400
> From: Arte Booten <n2zrc@webspan.net>
> To: APRS SIG <aprssig@tapr.org>
> Subject: IGate POSITs
> Message-ID: <35BA0746.D82AFC7F@webspan.net>
>
> Hi all,
>
>   As a user of APRSDos I see lots of stations showing null POSITs due
> to their sending messages via the I-Gates on my "P" page. This is nor-
> mal for APRSDos, as it shows that the station was heard but no POSIT has
> yet been received. Now, I have set one of my alternate paths (O-D-A) to
> send packets (POSIT, Status, ACKs) via a path that leads through my lo-
> cal I-gate a certain percentage of the time.
>
>   I believe such a capability is also possible with WinMacAPRS, but
> am not sure if this is possible with APRSa+. May I humbly suggest you
> consider setting such a path? Or would this create too much activity in
> local VHF nets?
>
>   One other little bugaboo I've noticed is that many stations have no
> contact information in either their POSIT or STATUS packets. Just in
> case someone needs to get in touch with you it might be a good idea for
> you to include either your e-mail address, packet BBS address, web page
> (or all of these) in one of these packets. This way, newbies monitoring
> the APRS frequency will be able to find out what all that gobbledygook
> on their terminal screen is about, problems with your station unknown to
> you could be easily reported and you might make a few more friends in
> the process. 73
> --
> Arte Booten <n2zrc@webspan.net> EC/RO for Bronx County, NYC ARES/RACES
> PGP Key Fingerprint: 22E5 3EC7 4E3C 2460 C570 BACA E48B 71D5 0F33 54AD

> Riverdale, NY [FN30bu]   Cruise Missile Coordinates: 4052.71N/07354.06W
>   TM-V7a/KPC-3 6.0/GPS-III Packet: N2ZRC@KB2VLX.#BRONX.NY.USA.NA
>
>   "There is an undetonated Chroniton Torpedo lodged in the hull."
>   "Do not attempt to disarm it until I arrive." "Arrive quickly!"
>   -Seven of Nine & Tuvok, Star Trek: Voyager; "Year of Hell"
>
> ------------------------------
>
> Date: Sat, 25 Jul 1998 10:48:31 -0700
> From: Cap Pennell <cap@cruzio.com>
> To: z004391b@bc.seflin.org, aprssig@tapr.org, aprs@lists.monterey.edu
> Subject: Re: APRS, Fugitives, and trip to NC by KN4HX
> Message-ID: <3.0.5.32.19980725104831.00899980@mail.cruzio.com>
>
> At 06:35 AM 7/25/98 -0500, John W Wilson wrote:
> >ARG! I didn't change frequencies, and got this message after returning
> >home. Thanks for the advice though, I will remember next time. Too bad,
> >but I think it is time to standardise to one frequency just for forgetful
> >people like me.
> >John W. Wilson, KN4HX
> >z004391b@bcfreenet.seflin.lib.fl.us
> >
> >
> >On Thu, 16 Jul 1998, Ralph Fowler wrote:
> >> Don't forget to switch to 145.79 when you hit GA and in NC!
> <snip>
>
> Of course, the national "standard" is 144.39! Have patience, John.
> 73, Cap KE6AFE
> --
> Cap Pennell
> Santa Cruz, CA 95062-1002   3658.93N/12200.91W [CM86xx]
> email: cap@cruzio.com   home page: http://members.cruzio.com/~cap
> packet radio: KE6AFE @ki6eh.#wcca.ca.usa.noam
>
> ------------------------------
>
> Date: Sat, 25 Jul 1998 14:46:49 -0500
> From: William Nolle <wa8inz@airnet.net>
> To: APRSsig <aprssig@tapr.org>
> Subject: Re: APRS, Fugitives, and trip to NC by KN4HX
> Message-ID: <35BA3629.43DC4E8@airnet.net>
>
> Cap Pennell wrote:
>
> > At 06:35 AM 7/25/98 -0500, John W Wilson wrote:
> > >ARG! I didn't change frequencies, and got this message after returning
> > >home. Thanks for the advice though, I will remember next time. Too bad,
> > >but I think it is time to standardise to one frequency just for forgetful
> > >people like me.
> > >John W. Wilson, KN4HX
> > >z004391b@bcfreenet.seflin.lib.fl.us
> > >
> > >
> > >On Thu, 16 Jul 1998, Ralph Fowler wrote:
> > >> Don't forget to switch to 145.79 when you hit GA and in NC!
> > <snip>
> >
> > Of course, the national "standard" is 144.39! Have patience, John.
> > 73, Cap KE6AFE
> > --
> > Cap Pennell
> > Santa Cruz, CA 95062-1002   3658.93N/12200.91W [CM86xx]
> > email: cap@cruzio.com   home page: http://members.cruzio.com/~cap
> > packet radio: KE6AFE @ki6eh.#wcca.ca.usa.noam
>
> And who made the decision that 144.390 was the national standard?.
>
> --
> Bill Nolle wa8inz
> wa8inz@airnet.net
> wa8inz@amsat.org
> Hazel Green, AL
>
> ------------------------------
>
> Date: Sat, 25 Jul 1998 15:02:54 -0400
> From: Ralph Fowler <rwf@BSRG.org>

> To: aprssig@tapr.org
> Subject: Status of S.E. USA QSY
> Message-ID: <199807251949.PAA12922@cocacola-bh.cokecce.com>
>
> The APRS digipeater network in the 8 states coordinated by SERA (The South
> East Repeater Association), along with the Digis in Central and Northern
> Alabama, will be moving to 144.39 MHz on or about Halloween weekend
> (October 31) 1998.
>
> We have obtained recognition by SERA for APRS use of the new frequency,
> formerly allocated to AMSAT for future Oscar operations. SERA approves our
> use of this frequency with one major stipulation: We are to use proper
> engineering and RF practices to protect the 145.xx voice repeaters- whose
> inputs lie as close as 120 KHz from 144.39. Several digis are co-sited
> with these repeaters and others are very close. Our digipeaters must be
> outfitted with the proper filtration devices (band pass and notch cavities)
> to accomplish this task.
>
> Some digis will need little or no work and others will need total
> replacement due to the lowness of the frequency being used, hence the
> October date.   This should give the owners ample time to make
> adjustments. Cost to the each digipeater owner will range from nothing to
> well over $1,000.00 ! If users in the affected areas would like to
> contribute to the expenses that their local digipeaters will incur, you may
> contact the owner directly or through me.
>
> There are at least 48 digipeaters represented here. Since the approval by
> the SERA Board early this month, I have personally corresponded with the
> owners of all but 5 of them. After numerous attempts to contact these 5, I
> have decided to carry them as unknowns. I think they are all in the
> KY-TN-VA area. Of the 43 digis remaining, 5 of them (two in SC and two in
> distant GA border areas) elected to not cooperate in the Group effort and
> already moved this past Spring- prior to the frequency being approved by
> SERA. One more is currently advertising that he plans to move this weekend.
>
> So... there you have it. Throughout history, we in the South have stuck
> together on causes that are important to us and have endeavored to always
> "do the right thing". We believe that an orderly study of all the
> implications of this move has taken place and that the outcome will be
> positive for all APRS users.
>
> This leaves one major area, Southern California, to remain on 145.79.
> Please be patient with them. The 144.39 frequency is coordinated to another
> user community, and there is no place to move those users. The issue is
> large and there ARE folks working on it. I know we appreciate the fact
> that MOST other users left us alone.
>
> Ralph Fowler N4NEQ
> Atlanta, GA
> July 25, 1998
>
> rwf@BSRG.org
>
> ------------------------------
>
> Date: Sat, 25 Jul 1998 15:02:23 -0700
> From: Cap Pennell <cap@cruzio.com>
> To: wa8inz@airnet.net, aprssig@tapr.org
> Subject: Re: APRS, Fugitives, and trip to NC by
> Message-ID: <3.0.5.32.19980725150223.00880eb0@mail.cruzio.com>
>
> At 02:52 PM 7/25/98 -0500, William Nolle wrote:
> >And who made the decision that 144.390 was the national standard?.
>
> Of course, Bill, the only real standards in APRS operation are those applied by the FCC.
> The rest of the APRS "conventions" are merely attempts to be considerate of other amateur operators.
:-)
> 73, Cap KE6AFE
> p.s.   Semantics, who needs 'em? hi
> p.p.s. Many thanks to Ralph N4NEQ for announcing the SERA area's QSY plans.
> --
> Cap Pennell
> Santa Cruz, CA 95062-1002   3658.93N/12200.91W [CM86xx]
> email: cap@cruzio.com   home page: http://members.cruzio.com/~cap
> packet radio: KE6AFE @ki6eh.#wcca.ca.usa.noam
>
> ------------------------------
>
> Date: Sat, 25 Jul 1998 18:15:08 -0400

> From: Arte Booten <n2zrc@webspan.net>
> To: APRS SIG <aprssig@tapr.org>
> Subject: Re: IGate POSITs
> Message-ID: <35BA58EB.7A16EE21@webspan.net>
>
> Hi all,
>
>   I seem to remember when I-Gates were first getting started that
> Steve recommended we NOT commonly send our POSITs via them. Therefore,
> with foot firmly extracted from mouth, I recant my suggestion. Sorry if
> I caused any harm to the network. 73
> --
> Arte Booten <n2zrc@webspan.net> EC/RO for Bronx County, NYC ARES/RACES
> PGP Key Fingerprint: 22E5 3EC7 4E3C 2460 C570 BACA E48B 71D5 0F33 54AD
> Riverdale, NY [FN30bu]   Cruise Missile Coordinates: 4052.71N/07354.06W
>   TM-V7a/KPC-3 6.0/GPS-III Packet: N2ZRC@KB2VLX.#BRONX.NY.USA.NA
>
>   "There is an undetonated Chroniton Torpedo lodged in the hull."
>   "Do not attempt to disarm it until I arrive." "Arrive quickly!"
>   -Seven of Nine & Tuvok, Star Trek: Voyager; "Year of Hell"
>
> ------------------------------
>
> Date: Sat, 25 Jul 1998 18:00:53 -0400
> From: n8exf@juno.com (R L BOEHM)
> To: aprssig@tapr.org
> Subject: Laser Diode help needed
> Message-ID: <19980725.180057.12134.4.N8EXF@juno.com>
>
> Sorry guys, I know this is off the subject, but there is a wealth of info
> to be found on this sig...
>
> I have a visible light laser that I cannot find connection info. It has 3
> connections.
> Thanks in advance.
>
> 73 de Bob, N8EXF // KN
> homepage   http://www.qsl.net/n8exf
>
> Igloos are polar bear snacks, crunchy on the outside, warm and chewy on
> the inside.
>
> ____
> You don't need to buy Internet access to use free Internet e-mail.
> Get completely free e-mail from Juno at http://www.juno.com
> Or call Juno at (800) 654-JUNO [654-5866]
>
> ------------------------------
>
> Date: Sat, 25 Jul 1998 20:22:58 -0400
> From: Wes Johnston <kd4rdb@eagnet.com>
> To: rwf@bsrg.org, aprssig@tapr.org
> Subject: Re: Status of S.E. USA QSY
> Message-ID: <3.0.32.19980725202237.0068a984@gena>
>
> the Savannah area is now on 144.39. Spun the dial, and tuned the cavity
> today. We will soon have our 2nd site up on 144.39, but in the mean time,
> it's on 145.79 until the xtals get here. So right now we are serving both
> frequencies.
>
> Maybe now we won't be so lonesome... heard charleston sc while at the site
> tuning up! Still waiting to see jax.
> Wes
> Email: mailto:kd4rdb@eagnet.com
> AlphaPager: mailto:kd4rdb@eagnet.com - subject line: PAGER
> APRS: http://www.qsl.net/kd4rdb/aprs.htm
>
> CAMPER FOR SALE: http://www.qsl.net/kd4rdb/camper.htm
>
> ------------------------------
>
> Date: Sat, 25 Jul 1998 21:18:52 -0400
> From: Steve Dimse K4HG <k4hg@tapr.org>
> To: "Arte Booten" <n2zrc@webspan.net>, "aprssig" <aprssig@tapr.org>
> Subject: Re: IGate POSITs
> Message-ID: <199807260118.UAA06136@tapr.org>
>
> On 7/25/98 6:20 PM Arte Booten (n2zrc@webspan.net) wrote:
>

> >   I seem to remember when I-Gates were first getting started that
> >Steve recommended we NOT commonly send our POSITs via them. Therefore,
> >with foot firmly extracted from mouth, I recant my suggestion. Sorry if
> >I caused any harm to the network. 73
>
> There is no way for a person to send a posit through an IGate. None of
> the IGates respond to a via in the same way HF gates do...they are much
> more sophisticated in deciding what goes through. The control is by the
> IGate programmer and operator rather than the transmitting station as on
> HF.
>
> APRServe and APRS+SA have the ability to gate positions from certain
> stations to a local area, under the control of the IGate operator. In
> this way, for example, everyone on the Miami LAN gets to see W7LUS-14's
> travels...these packets are limited by APRServe to one every 15 minutes.
>
> One posit report will be sent when a station sends a message out through
> the IGate. In this way, a posit will get sent every n minutes (APRServe
> uses 15) while a station is in QSO via the IGate. This is enough to let
> you be seen in a remote area without causing QRM.
>
> You can force a posit to go out on a specific local network by sending a
> message to a station in that area. Mac/WinAPRS IGates as well as APRServe
> allow you to send messages to, for example digis, for exactly this
> reason. APRS+SA IGates prevent this method however, and you would need to
> send a message to a specific APRS station in the local area.
>
> Steve K4HG
>
> ------------------------------
>
> Date: Sat, 25 Jul 1998 18:35:09 -0700
> From: "B. Hildebrand" <bhildebrand@earthlink.net>
> To: <k4hg@tapr.org>, <aprssig@tapr.org>
> Subject: Re: IGate POSITs
> Message-ID: <00b801bdb835$efece860$e6ebd9cf@laptop133>
>
> -----Original Message-----
> From: Steve Dimse K4HG <k4hg@tapr.org>
> To: aprssig@tapr.org <aprssig@tapr.org>
> Date: Saturday, July 25, 1998 6:25 PM
> Subject: [APRSSIG:26549] Re: IGate POSITs
>
> >On 7/25/98 6:20 PM Arte Booten (n2zrc@webspan.net) wrote:
> >
> <<<< SNIP >>>>
>
> >You can force a posit to go out on a specific local network by sending a
> >message to a station in that area. Mac/WinAPRS IGates as well as APRServe
> >allow you to send messages to, for example digis, for exactly this
> >reason. APRS+SA IGates prevent this method however, and you would need to
> >send a message to a specific APRS station in the local area.
> >
> >Steve K4HG
> >
> APRS+SA does not gate messages to non-computer driven stations, since a
> digi will not ACK a message sent to it. A message to a digi for example,
> might be sent over and over, since it will never get acknowledged. So to
> keep QRM down, APRS+SA does not gate to these kinds of stations Messages
> will be gated to any active computer driven station.
> .
> BH, KH2Z
> >
>
> ------------------------------
>
> Date: Sat, 25 Jul 1998 23:45:05 -0400 (EDT)
> From: Bob Bruninga <bruninga@nadn.navy.mil>
> To: Ke4osu@aol.com
> Subject: Re: help in Tallahassee
> Message-ID: <Pine.SOL.3.96.980725234328.11731E-100000@arctic>
>
> ANyone in Talahassee can help this gent? I know there is activity to the
> west of him, but not sure about talahassee...   John, lets see if anyone
> steps forward...
>
> On Sat, 25 Jul 1998 Ke4osu@aol.com wrote:
>
> >   hello and thanks in advance for your time. I'm not having

> > any luck getting apars software or any info on the subject in my area any help
> > or advice would be great.
> >   thanks john ke4osu
>
> ------------------------------
>
> Date: Sun, 26 Jul 1998 00:14:40 -0400 (EDT)
> From: Bob Bruninga <bruninga@nadn.navy.mil>
> To: aprssig@tapr.org
> Subject: NJ Mile Markers
> Message-ID: <Pine.SOL.3.96.980726000808.11731O-100000@arctic>
>
> One of the main arteries on the East coast is the NJ Turnpike. I need a
> few mile marker references to add it to my database.   Here is what I need
> from the next person that happens to be driving along it. NO GPS NEEDED!
> Here are the answers I need:
>
> 1) Does MM 0 correspond with the first TOll plaza (I assume YES)
> 2) Need MM nearest to exit 4
> 3) Need MM nearest to exit 8
> 4) Need MM nearest to exit 9
> 5) Need MM nearest to exit 12
> 6) Need MM nearest to exit 18
>
> Thanks. W2HOB gave me the LAT/LONGS already. Just need milemarker.
> Fractional MM is just fine...
>
> APRSdos REPLY/COMMENT:
>
> Reply mail addr: wb4apr@amsat.org
> US mail address: 115 old Farm Ct, Glen Burnie, MD 21060
> See DAYTON97 HISTORY: http://web.usna.navy.mil/~bruninga/dayton.html
> See Maryland APRS LIVE: http://web.usna.navy.mil/~bruninga/aprs.html
> See GPS on ANY radio: http://www.tapr.org/tapr/html/mic-e.html
>
> ------------------------------
>
> End of APRSSIG Digest 1628
> **************************

728. Delivery Confirmation RE: [APRSSIG:26571] APRSSIG digest 1629

From: "Edgardo Molina" <xe1xus@molinet.dyn.ml.org>
Date: Sun, 26 Jul 1998 22:01:17 -0500 (CDT)
To: aprssig@tapr.org
Message-ID: <0000000068@molinet.dyn.ml.org>
Rendered body type: text/plain

[Empty message body]

729. Re: [APRSSIG:26570] GPS III Speed Limitation?

From: Steve Dimse K4HG <k4hg@tapr.org>
Date: Sun, 26 Jul 1998 23:06:17 -0400
To: "Rich Garcia" <k4gps@bellsouth.net>, "aprssig" <aprssig@tapr.org>
Message-ID: <199807270306.WAA25636@tapr.org>
Rendered body type: text/plain

On 7/26/98 10:12 PM Richard Garcia (k4gps@bellsouth.net) wrote:

>Is anyone aware of a speed limitation on the GPS III from Garmin ? I
>tried my new one today up to 95mph <grin> and it still worked well.
>This was on very desolate strech of road on a very long and boring
>trip. I would rather not test it out any further but am curious if I
>can use it on aircraft.
>
>I got burned long ago, I'm the one who first figured out that non
>AERO Garmins are limited in speed. That is AFTER I set up a station
>in a 172 and decided to take it for a trip with a friend!
>
I've used mine on commercial flights and hit 660 MPH.

Steve K4HG

730. W7LUS-14 Itinerary

From: Joe Loewy <jloewy@wncnet.net>
Date: Mon, 27 Jul 1998 08:20:16 -0400
To: "aprssig@tapr.org" <aprssig@tapr.org>
Message-ID: <35BC7080.BF2BDBDC@wncnet.net>
Rendered body type: text/plain

Peter's presently en route from Chicago to So. Boro, Hyde Park, No Attleboro,
New Bedford and then to LACC
73 de JOe W4ERL (ex KB4FO)

731. base station velocities - winaprs 2.2.0

From: Wes Johnston <kd4rdb@eagnet.com>
Date: Mon, 27 Jul 1998 11:17:55 -0400
To: aprssig@tapr.org
Message-ID: <3.0.32.19980727111754.007070dc@gena>
Rendered body type: text/plain

appologies in advance for the length of this... BUT... when went to sleep
last night, I left my station on to observe band conditions. When I woke
up, I found that n4for had been active on his motorcycle... and that my
house matched his velocity. Check out the logs... 61 degree heading,
42knots. The wind isn't even blowing - there is no excuse for my house to
be moving at 42 knots! I run winaprs 2.2.0. The clock in my laptop is
about 4 minutes slow of utc.

KD4RDB>APRSW,W4HBB-1*,WIDE,WIDE3-3:@270912z3209.35N/08109.88W;000/000/
-220-<530>
KD4RDB>APRSW,W4HBB-1*,WIDE,WIDE3-3:@270922z3209.35N/08109.88W;000/000/
-220-<530>
KD4RDB>APRSW,W4HBB-1,AA4QI-1*,WIDE3-3:@270922z3209.35N/08109.88W;000/000/
-220-<530>
KD4RDB>APRSW,W4HBB-1*,WIDE,WIDE3-3:@270932z3209.35N/08109.88W;000/000/
-220-<530>
KD4RDB>APRSW,W4HBB-1,AA4QI-1*,WIDE3-3:@270932z3209.35N/08109.88W;000/000/
-220-<530>
KD4RDB>APRSW,W4HBB-1*,WIDE,WIDE3-3:@270942z3209.35N/08109.88W;000/000/
-220-<530>
KD4RDB>APRSW,W4HBB-1,AA4QI-1*,WIDE3-3:@270942z3209.35N/08109.88W;000/000/
-220-<530>
KD4RDB>APRSW,W4HBB-1*,WIDE,WIDE3-3:@270952z3209.35N/08109.88W;000/000/
-220-<530>
KD4RDB>APRSW,W4HBB-1,AA4QI-1*,WIDE3-3:@270952z3209.35N/08109.88W;000/000/
-220-<530>
KD4RDB>APRSW,W4HBB-1*,WIDE,WIDE3-3:@271002z3209.35N/08109.88W;000/000/
-220-<530>
KD4RDB>APRSW,W4HBB-1*,WIDE,WIDE3-3:@271012z3209.35N/08109.88W;000/000/
-220-<530>
KD4RDB>APRSW,W4HBB-1*,WIDE,WIDE3-3:@271022z3209.35N/08109.88W;000/000/
-220-<530>
KD4RDB>APRSW,W4HBB-1*,WIDE,WIDE3-3:@271032z3209.35N/08109.88W;000/000/
-220-<530>
KD4RDB>APRSW,W4HBB-1*,WIDE,WIDE3-3:@271042z3209.35N/08109.88W;000/000/
-220-<530>
KD4RDB>APRSW,W4HBB-1*,WIDE,WIDE3-3:@271052z3209.35N/08109.88W;000/000/
-220-<530>
KD4RDB>APRSW,W4HBB-1*,WIDE,WIDE3-3:@271102z3209.35N/08109.88W;000/000/
-220-<530>
KD4RDB>APRSW,W4HBB-1*,WIDE,WIDE3-3:@271112z3209.35N/08109.88W;000/000/
-220-<530>
KD4RDB>APRSW,W4HBB-1*,WIDE,WIDE3-3:@271122z3209.35N/08109.88W;000/000/
-220-<530>
KD4RDB>APRSW,W4HBB-1*,WIDE,WIDE3-3:@271132z3209.35N/08109.88W;000/000/
-220-<530>
KD4RDB>APRSW,W4HBB-1*,WIDE,WIDE3-3:@271142z3209.35N/08109.88W;061/043/
-220-<530>
KD4RDB>APRSW,W4HBB-1*,WIDE,WIDE3-3:@271152z3209.35N/08109.88W;061/043/
-220-<530>
KD4RDB>ID,W4HBB-1*,WIDE,WIDE3-3:KD4RDB/R RELAY/D KD4RDB-1/B
KD4RDB>APRSW,W4HBB-1*,WIDE,WIDE3-3:@271202z3209.35N/08109.88W;061/043/
-220-<530>
KD4RDB>APRSW,W4HBB-1*,WIDE,WIDE3-3:@271212z3209.35N/08109.88W;061/043/
-220-<530>
KD4RDB>APRSW,W4HBB-1*,WIDE,WIDE3-3:@271222z3209.35N/08109.88W;061/043/
-220-<530>
KD4RDB>APRSW,W4HBB-1*,WIDE,WIDE3-3:@271232z3209.35N/08109.88W;061/043/
-220-<530>
KD4RDB>APRSW,W4HBB-1,N7GZT-5*,WIDE3-3:@271232z3209.35N/08109.88W;061/043/
-220-<530>
KD4RDB>APRSW,W4HBB-1*,WIDE,WIDE3-3:@271242z3209.35N/08109.88W;061/043/
-220-<530>
KD4RDB>APRSW,W4HBB-1*,WIDE,WIDE3-3:@271252z3209.35N/08109.88W;061/043/
-220-<530>
KD4RDB>APRSW,W4HBB-1*,WIDE,WIDE3-3:@271302z3209.35N/08109.88W;061/043/
-220-<530>

```
KD4RDB>APRSW,W4HBB-1*,WIDE,WIDE3-3:@271312z3209.35N/08109.88W;061/043/
-220-<530>
KD4RDB>APRSW,W4HBB-1,N7GZT-5*,WIDE3-3:@271312z3209.35N/08109.88W;061/043/
-220-<530>
KD4RDB>APRSW,W4HBB-1*,WIDE,WIDE3-3:@271322z3209.35N/08109.88W;061/043/
-220-<530>
KD4RDB>APRSW,W4HBB-1*,WIDE,WIDE3-3:@271332z3209.35N/08109.88W;061/043/
-220-<530>
KD4RDB>APRSW,W4HBB-1*,WIDE,WIDE3-3:@271342z3209.35N/08109.88W;061/043/
-220-<530>
KD4RDB>APRSW,W4HBB-1*,WIDE,WIDE3-3:@271352z3209.35N/08109.88W;061/043/
-220-<530>
KD4RDB>APRSW,W4HBB-1*,WIDE,WIDE3-3:@271402z3209.35N/08109.88W;061/043/
-220-<530>
KD4RDB>APRSW,W4HBB-1*,WIDE,WIDE3-3:@271412z3209.35N/08109.88W;061/043/
-220-<530>
KD4RDB>APRSW,W4HBB-1*,WIDE,WIDE3-3:@271422z3209.35N/08109.88W;061/043/
-220-<530>
KD4RDB>APRSW,W4HBB-1*,WIDE,WIDE3-3:@271432z3209.35N/08109.88W;061/043/
-220-<530>
KD4RDB>APRSW,W4HBB-1*,WIDE,WIDE3-3:@271442z3209.35N/08109.88W;061/043/
-220-<530>
KD4RDB>APRSW,W4HBB-1*,WIDE,WIDE3-3:@271452z3209.35N/08109.88W;061/043/
-220-<530>
KD4RDB>APRSW,W4HBB-1*,WIDE,WIDE3-3:@271502z3209.35N/08109.88W;061/043/
-220-<530>

**************************************************************

N4FOR-10>APRS,RELAY*:$GPGGA,113632,3158.902,N,08059.737,W,1,5,002.2,36,M,-03
2,M,,*4B
N4FOR-10>APRS,RELAY*:$GPGGA,114155,,,,,0,0,,,,,,*53
N4FOR-10>APRS,RELAY*:$GPVTG,061,T,066,M,37.9,N,70.1,K*42
N4FOR-10>APRS,RELAY*:....APRS Mobile....
N4FOR-10>APRS,RELAY*:$GPGGA,114155,,,,,0,0,,,,,,*53
N4FOR-10>APRS,RELAY*:$GPGGA,114155,,,,,0,0,,,,,,*53
N4FOR-10>APRS,RELAY*:$GPVTG,061,T,066,M,37.9,N,70.1,K*42
N4FOR-10>APRS,RELAY*:$GPVTG,061,T,066,M,37.9,N,70.1,K*42
N4FOR-10>APRS,RELAY:$GPGGA,,,,,,0,0,,,,,,*56
N4FOR-10>APRS,RELAY*:$GPGGA,,,,,,0,0,,,,,,*56
N4FOR-10>APRS,RELAY*:$GPVTG,061,T,066,M,37.9,N,70.1,K*42
N4FOR-10>APRS,RELAY*:....APRS Mobile....
N4FOR-10>APRS,RELAY*:$GPGGA,,,,,,0,0,,,,,,*56
N4FOR-10>APRS,RELAY*:$GPVTG,061,T,066,M,37.9,N,70.1,K*42
N4FOR-10>APRS,RELAY*:$GPVTG,061,T,066,M,37.9,N,70.1,K*42
N4FOR-10>APRS,RELAY*:$GPGGA,,,,,,0,0,,,,,,*56
N4FOR-10>APRS,RELAY*:$GPVTG,061,T,066,M,37.9,N,70.1,K*42
N4FOR-10>APRS,RELAY*:$GPGGA,,,,,,0,0,,,,,,*56
N4FOR-10>APRS,RELAY*:$GPVTG,061,T,066,M,37.9,N,70.1,K*42
N4FOR-10>APRS,RELAY*:$GPGGA,,,,,,0,0,,,,,,*56
N4FOR-10>APRS,RELAY*:$GPVTG,061,T,066,M,37.9,N,70.1,K*42
N4FOR-10>APRS,RELAY*:$GPGGA,,,,,,0,0,,,,,,*56
N4FOR-10>APRS,RELAY*:$GPVTG,061,T,066,M,37.9,N,70.1,K*42
N4FOR-10>APRS,RELAY*:$GPGGA,,,,,,0,0,,,,,,*56
N4FOR-10>APRS,RELAY*:$GPVTG,061,T,066,M,37.9,N,70.1,K*42
N4FOR-10>APRS,RELAY*:....APRS Mobile....

Wes
Email:      mailto:kd4rdb@eagnet.com
AlphaPager: mailto:kd4rdb@eagnet.com - subject line: PAGER
APRS:       http://www.qsl.net/kd4rdb/aprs.htm

CAMPER FOR SALE: http://www.qsl.net/kd4rdb/camper.htm
```

732. Re: [APRSSIG:26553] solar power

From: Bob Bruninga <bruninga@nadn.navy.mil>
Date: Mon, 27 Jul 1998 11:56:57 -0400 (EDT)
To: "J.B. Weazle McCreath" <weazle@hurontel.on.ca>
Cc: aprssig@tapr.org
Message-ID: <Pine.SOL.3.96.980727100652.12363B-100000@arctic>
Rendered body type: text/plain

On Sun, 26 Jul 1998, J.B. Weazle McCreath wrote:

> My entire shack, including the computer for APRS, is run from solar power.
> I have a bank of 60 nicad batteries that are charged from an array on the
> roof, and provide power at night.

Great system! But I noticed in his signiture block, that Mr. Mcreath also works in the business of solar power. For those of you who have thought about solar power, but been put off by the high cost, consider this cheaper alternative...

Once one invests in a battery backup system, one should not overlook the use of off-peak cheap electricity to charge your batteries from the power company at night. In my house, electricity is only 2 cents per KW between 11PM and 7AM yearround compared to 8 and 10 cents during the days. Thus, the economic incentive to go solar is drastically reduced, because the pay back time is then 4 times longer than advertized!

Of course, solar cannot be beat where there is no AC, or where one can get the cells surplus at a fraction of their real value. Its hard to beat 100% free electricity. But dont overlook the 75% discount off-peak power either...

With a battery only system, the only cost is the electricity and the periodic replacement of the batteires. I ran the calculations out and deteremined that you could run a 10 battery 120 volt Lead-Acid battery system providing on the order of 5 kwh by charging at night for 2 cents and replacing all 10 batteries every 5 years. THe net result is an almost perfect break-even. THe costs of the batteries every 5 years equals the savings by using off-peak 2-cent electricity.

But notice, this means you get a battery back up system FOR FREE. It pays for itself. Compared to solar, which may take 10 to 30 years to pay for itself...

Just a thought.

733. Re: [APRSSIG:26575] base station velocities - winaprs 2.2.0

From: Mark Sproul <msproul@ap.org>
Date: Mon, 27 Jul 1998 12:13:27 -0400
To: kd4rdb@eagnet.com, aprssig@tapr.org
Message-ID: <v0311070ab1e25773432e@[165.1.27.20]>
Rendered body type: text/plain

At 11:29 AM -0400 7/27/98, Wes Johnston wrote:
>appologies in advance for the length of this... BUT... when went to sleep
>last night, I left my station on to observe band conditions. When I woke
>up, I found that n4for had been active on his motorcycle... and that my
>house matched his velocity. Check out the logs... 61 degree heading,
>42knots. The wind isn't even blowing - there is no excuse for my house to
>be moving at 42 knots! I run winaprs 2.2.0. The clock in my laptop is
>about 4 minutes slow of utc.
>

<SNIP>

Wes,

I was able to reproduce this from the log, I am going to figure out what is causing it and fix it.

Mark


```
_____________________________________________________________________________
Mark Sproul                      |
Software Engineer @ Assoc Press  |Work: 609-860-7120
msproul@ap.org                   |Fax:  609-860-7129
_____________________________________________________________________________
```


734. [amsat-bb] Oshkosh (fwd)

From: Bob Bruninga <bruninga@nadn.navy.mil>
Date: Mon, 27 Jul 1998 12:22:40 -0400 (EDT)
To: aprssig@tapr.org
Message-ID: <Pine.SOL.3.96.980727122204.12363S-100000@arctic>
Rendered body type: text/plain

Another question is will there be any APRS there?

---------- Forwarded message ----------
Date: Mon, 27 Jul 1998 02:11:05 -0500
From: Dan James <nn0dj@means.net>
To: 'Amsat BB' <amsat-bb@AMSAT.Org>
Subject: [amsat-bb] Oshkosh

Greetings all from northern Minnesota....

NN0DJ is going to be in Oshkosh for the big EAA fly-in (I'm there 7/31-
8/3), and since many amateurs are also pilots... any satellite operators
going?

If so, I'd love an eyeball QSO.

E-mail me direct at nn0dj@amsat.org.

  --73 Dan NN0DJ--
   AMSAT-NA ANS Bulletin Editor

Via the amsat-bb mailing list at AMSAT.ORG courtesy of AMSAT-NA.
To unsubscribe, send "unsubscribe amsat-bb" to Majordomo@amsat.org

735. RE: APRS Screen Problem...

From: Bob Bruninga <bruninga@nadn.navy.mil>
Date: Mon, 27 Jul 1998 12:34:26 -0400 (EDT)
To: "Brummett, Sam" <sam.brummett@eds.com>
Cc: aprssig@tapr.org
Message-ID: <Pine.SOL.3.96.980727123237.12363U-100000@arctic>
Rendered body type: text/plain

I have not seen this problem. Has anyone else dealt with this on a
laptop?

On Mon, 27 Jul 1998, Brummett, Sam wrote:

>   First, all the colored graphics look correct and appear to be in
> their right places. The problem seems to start where the yellow circle is on
> the right side of the BIG APRS. The "R" is not in the circle but is one
> line below from where it should be. From that point on all the text lines
> are one line too low... I am unable to see the line which asks to enter
> "Radio CALLSIGN?. Also unable to see the input cursor on the screen. I can
> keep pressing the enter key and get to the map.   When at the map I still
> can not see the input cursor or the input line.
> Thnaks   Sam   N9XPZ   sam.brummett@eds.com

736. Re: solar power

From: "Randolph L. Hammock" <Randy.Hammock@jpl.nasa.gov>
Date: Mon, 27 Jul 1998 09:42:00 -0700
To: APRSSIG <aprssig@tapr.org>
Message-ID: <35BCADD8.51BCEE69@jpl.nasa.gov>
Rendered body type: text/plain

Bob Bruninga wrote:
>
> Once one invests in a battery backup system, one should not overlook
> the use of off-peak cheap electricity to charge your batteries from the
> power company at night. In my house, electricity is only 2 cents per KW
> between 11PM and 7AM yearround compared to 8 and 10 cents during the
> days. Thus, the economic incentive to go solar is drastically reduced,
> because the pay back time is then 4 times longer than advertized!

Doesn't this require a special metering arrangement with the power
company? Most meters on residences do not record the time in which the
power was used; therefore, there is no record of when you used the power
and you thus pay at whatever flat rate is charged for residential usage.

--
Randy Hammock   KC6HUR | Jet Propulsion Laboratory
mailto:Randy.Hammock@jpl.nasa.gov | M/S: 301-270
 Voice: +1-818-354-7143 | 4800 Oak Grove Drive
                                   | PASADENA CA 91109

737. Re: [APRSSIG:26551] Re: help in Tallahassee

From: Doug Ferrell <kd4moj@kd4moj.org>
Date: Mon, 27 Jul 1998 12:49:06 -0400
To: aprssig@tapr.org
Message-ID: <3.0.3.32.19980727124906.006a55e8@kd4moj.org>
Rendered body type: text/plain

At 10:50 PM 7/25/98 -0500, you wrote:
>ANyone in Talahassee can help this gent? I know there is activity to the
>west of him, but not sure about talahassee...   John, lets see if anyone
>steps forward...

>
>
>On Sat, 25 Jul 1998 Ke4osu@aol.com wrote:
>
>>   hello and thanks in advance for your time. I'm not
having
>> any luck getting apars software or any info on the subject in my area
any help
>> or advice would be great.
>>   thanks john ke4osu

Been off the list for 2 weeks.... missed this msg

  Where are you located John? APRS is alive and well in Tallahassee.... I
can get and help config the software for ya...

...DOUG
kd4moj

    New APRS-CDROM! http://kd4moj.org/aprscd.htm
  +--+
  | Doug Ferrell   Voice (850) 575-7119 |
  | kd4moj@kd4moj.org, http://www.kd4moj.org   Fax (850) 575-6577 |
  | Amateur Radio & Television (ATV), APRS   APRS 144.390 Mhz |
 | 3027.27N / 08420.80W Tallahassee Florida   131.8 CTCSS 444.400 Mhz |

738. Re: [APRSSIG:26570] GPS III Speed Limitation?

From: John W Wilson <z004391b@bc.seflin.org>
Date: Mon, 27 Jul 1998 12:52:52 -0400 (EDT)
To: Richard Garcia <k4gps@bellsouth.net>
Cc: aprssig@tapr.org
Message-ID: <Pine.3.89.9807271209.D28741-0100000@bc.seflin.org>
Rendered body type: text/plain

Mine worked up to 560 mph, but didn't try it any faster. The pilot just
ignored my request for 'let's see what this baby will do'.

John W. Wilson, KN4HX
z004391b@bcfreenet.seflin.lib.fl.us

On Sun, 26 Jul 1998, Richard Garcia wrote:

> Is anyone aware of a speed limitation on the GPS III from Garmin ? I
> tried my new one today up to 95mph <grin> and it still worked well.
> This was on very desolate strech of road on a very long and boring
> trip. I would rather not test it out any further but am curious if I
> can use it on aircraft.
>
> I got burned long ago, I'm the one who first figured out that non
> AERO Garmins are limited in speed. That is AFTER I set up a station
> in a 172 and decided to take it for a trip with a friend!
>
>
> k4gps@bellsouth.net Ex: N2CZF KA2FXA
> Jupiter Farms FL.
> http://aprs.florida.net
> http://www.radiotronics.com
>

739. FS: TripMate

From: Dave <deeaton@lycosmail.com>
Date: Mon, 27 Jul 1998 11:35:41 -0500
To: aprssig@tapr.org
Message-ID: <35BCAC5D.7D64DEB3@lycosmail.com>
Rendered body type: text/plain

I have like new Delorme TripMate w/ power cord and computer interface.
$125.00 obo plus shipping. Does not include cd-rom. Got it for
APRS and not going to use it. Getting Garmin for that project.
Don't need to sell just don't care about it sitting around on shelf.
Send email direct to me thanks.

740. Re: [APRSSIG:26580] Re: solar power

From: Bob Bruninga <bruninga@nadn.navy.mil>
Date: Mon, 27 Jul 1998 13:33:05 -0400 (EDT)
To: "Randolph L. Hammock" <Randy.Hammock@jpl.nasa.gov>
Cc: aprssig@tapr.org
Message-ID: <Pine.SOL.3.96.980727132356.10419B-100000@arctic>
Rendered body type: text/plain

> Doesn't this require a special metering arrangement with the power
> company?

Yes, but all power companies offer it (its a federally mandated program I think). In fact, it is manditory for ALL NEW CONSTRUCTION since 1990 (in Maryland anyway). If you like the challenge, you can save money. BUT NOT if you must have Air Conditioning between 11 AM and 8 PM where you will pay 17 cents per KWH! But you can run the AC for 8 hours overnight for the same cost as 1 hour during the day. So just cool'er down at nite. (This is not foreveryone, but fun if you like the challenge).

The APRS thread here is that if you ARE on such a system, then consider a bank of batteries in the basement for your emergency power system. It is far cheaper than solar...

741. More milemarks

From: Bob Bruninga <bruninga@nadn.navy.mil>
Date: Mon, 27 Jul 1998 14:01:33 -0400 (EDT)
To: aprssig@tapr.org
Message-ID: <Pine.SOL.3.96.980727135924.26629A-100000@arctic>
Rendered body type: text/plain

Over the weekend (at a swim meet) I was able to finish these additional states, CO, MI, NM, ND, SD, TX, UT and NJ TPK.

Results now posted in a new MILEMARK.DAT

742. wanted: street atlas

From: "Mike Knapp" <knapp@parrett.net>
Date: Mon, 27 Jul 1998 14:17:34 -0400
To: <aprssig@tapr.org>
Message-ID: <000901bdb98a$d7ccf1c0$ea0e1fce@knapp>
Rendered body type: text/plain

hello fellow aprs users. i was wonder if any of you by chance have street atlas versions 4 or 5 for sale. thanks
de mike, kb8ukp
Lat: 42' 5.67" N
Long: 86' 28.62" W

743. Re: [APRSSIG:26580] Re: solar power

From: John Dolan <jdolan@erols.com>
Date: Mon, 27 Jul 1998 14:34:44 -0700
To: aprssig@tapr.org
Message-ID: <35BCF274.E14@erols.com>
Rendered body type: text/plain

Bob Bruninga said:

>In my house, electricity is only 2 cents per KW
> between 11PM and 7AM yearround compared to 8 and 10 cents during the
> days. Thus, the economic incentive to go solar is drastically reduced,
> because the pay back time is then 4 times longer than advertized!

Randy said:

> Doesn't this require a special metering arrangement with the power
> company? Most meters on residences do not record the time in which the
> power was used; therefore, there is no record of when you used the >
> power and you thus pay at whatever flat rate is charged for residential
> usage.

In my area of Maryland, Pepco charges 22 cents during the day in Summer, and about 6 cents during the evening and night... so the secret is to go all battery for computer, aprs, etc., during that 12 noon to 8 pm. The problem is cooling. I've tried chilling the house down and letting it warm up, but it gets unbearable about 6 to 7 pm. And if you want to see some $400 to $500 electric bills, run the AC units all day!

--

Regards,

John Dolan

jdolan@erols.com

744. Lead-Acid Cell DANGERS! [was: battery water]

From: Arte Booten <n2zrc@webspan.net>
Date: Mon, 27 Jul 1998 13:16:42 -0400
To: APRS SIG <aprssig@tapr.org>
Message-ID: <35BCB5FA.6532F8AC@webspan.net>
Rendered body type: text/plain

Hi all,

Greg Harbaugh wrote:

>If you are using lead acid [batteries], make sure that the battery room
>or containers are vented to outside!! As they charge they give off hy-
>drogen gas...very explosive!!

Back when I worked at a department store, my department was near the entrance to the automotive shop. One day we heard a BOOM followed by a scream. The lamebrain working there decided to light up a cigarette not four feet from where he was charging auto batteries. Basically, this cost him his face ... literally!

We hear all the time about people "topping off" the charge in their garages, then causing some spark (like turning on the light switch) and going ker-blam. Aside from the fact that most lead-acid type batteries are not designed for, nor do they appreciate in the long run, deep discharge cycles, they can be downright deadly.

So please, PLEASE don't be tempted to use your old car battery for an alternate power source if there's any POSSIBLE chance of fumes accumulating while charging them. If you absolutely MUST use one, charge it outdoors or in an extremely well ventilated area. And if you smell that vinegary-like smell, don't touch the light switch, strike metal against anything or otherwise cause a spark. The life you save may be yours. Or your child's. 73
--
Arte Booten <n2zrc@webspan.net> EC/RO for Bronx County, NYC ARES/RACES
PGP Key Fingerprint: 22E5 3EC7 4E3C 2460 C570 BACA E48B 71D5 0F33 54AD
Riverdale, NY [FN30bu] Cruise Missile Coordinates: 4052.71N/07354.06W
TM-V7a/KPC-3 6.0/GPS-III Packet: N2ZRC@KB2VLX.#BRONX.NY.USA.NA

"There is an undetonated Chroniton Torpedo lodged in the hull."
"Do not attempt to disarm it until I arrive." "Arrive quickly!"
-Seven of Nine & Tuvok, Star Trek: Voyager; "Year of Hell"

745. Re: My Kam is Sick

From: Glenn Wiebe <gswiebe@mb.sympatico.ca>
Date: Mon, 27 Jul 1998 20:02:37 -0700
To: aprssig@tapr.org
Message-ID: <35BD3F4D.8A26432F@mb.sympatico.ca>
Rendered body type: text/plain

I wrote:

> When I fired up my station this morning, the Kam (with enhancement
> board, v8.0) came back with graphic characters rather then the usual
> 'plain english' message. Likewise when I send it commands it responds
> but with gibberish. Incoming text causes the front panel lights to do
> their thing but it does not make it to the screen, readable or
> otherwise. I have done several hard resets and tried two different
> programs to communicate with the beast. It does not go through the abaud
> routine on power-up. Any suggestions?

Thank you Arte, Assi, John, Jim, Jeff, Tedd, Geoffrey, Mike & Steve for responding. A close look revealed two of the three pins of the +5v regulator ic were detached from their respective pc traces. When I replaced the ic several years ago I did a less then perfect job (I detest working on pc boards and it shows). The traces that connect to the three pins are long gone and I ended up soldering short lengths of insulated wire to the pins and tack soldered the other ends to solder pads near by - such as those that are used to solder the on/off switch and a near by capacitor to the board. It's messy and places the component in danger but I got away with it. Oh how I wished for some decent drawings. The fuzzy schematics and lay-outs in the manual are nothing for Kantronics to be proud of. After the repairs the computer and the TNC had a hard time communicating and I dug out an old little

used program which got me going to the point where autobaud routine
worked.

John, I'm usually on 30m APRS from 03:30 to 14:30 UTC so you should see
me on the map for at least the latter part of that time frame. HF (only)
APRS is about as exciting as watching paint dry so I leave the station
in that mode when I'm sleeping. :-) This area is a vast APRS wasteland.

Thanks again, guys.

Glenn

--
Glenn Wiebe...Box 1563...Beausejour...MB...Canada...R0E 0C0
Email: gswiebe@mb.sympatico.ca.....ham radio call sign: VE4GN
Packet address: ve4gn@ve4ua.#wpg.mb.ca.noam

746. Re: [APRSSIG:26510] KPC 3+ 8.2

From: Kevin Kelly <kkelly@radix.net>
Date: Mon, 27 Jul 1998 16:42:36 -0400
To: "walterh@houston-intranet.com" <walterh@houston-intranet.com>,
"aprssig@tapr.org" <aprssig@tapr.org>
Message-ID: <35BCE63C.EE881864@radix.net>
Rendered body type: text/plain

Greetings,

Thanks for the update. I wired my KPC 3 v8.3 this weekend. I wanted to use it in conjuction with my
tripmate. I realized though that
I would not be able to send the tripmate the ASTRAL initialization word through the 2nd port. So I did
the "Self Start Mod" that is
expertly documented on the KD4RDB webpage www.qsl.net/kd4rdb/tripmate.htm The mod was succesful but I
can't seem to get it to play on
APRSplus either using the pico selection or using 2 com ports. Also Street Atlas crash several times
with APRSplus running. I am using a
Dell Inspiron 3000, 233MMX, Windows 98, tripmate with self start mod.

Walter would you pls send me your 8.3 settings and your setup details from APRSplus?

BTW, I have verified the tripmate is working, as it puts the green arrows on the map as I drive along
running Street Atlas 5.0. Which is
a little wierd because I wasalso running APRSplus at the same time. Shouldn't I have been seeing my call
instead of the green arrows?

Thanks
Kevin Kelly/N6QAB
kkelly@radix.net

Walter Holmes wrote:

> Kevin,
>
> I just wired my KPC3+ yesterday, with the 2nd comm port for my GPS, and it works quite well with my
GPS. And the APRSPLUS program.
>
> Did you ever get one wired up with APRSPLUS as well ?
> Walter Holmes
> K5wh@houston-intranet.com
>
> -----Original Message-----
> From: Kevin Kelly [SMTP:kkelly@radix.net]
> Sent: Thursday, July 23, 1998 7:55 PM
> To: aprssig@tapr.org
> Subject: [APRSSIG:26510] KPC 3+ 8.2
>
> Greetings SIG:
>
> Are APRSplus and/or winAPRS setup to use the GPS com port that was
> recently added to the 8.2 firmware? If so, how should it be setup in the
> program?
>
> Thanks in advance...
>
> 73
> Kevin Kelly/N6QAB
> kkelly@radix.net
>

747. Base Station Velocities.

From: "Rich Mazzeo" <n3xku@erols.com>
Date: Mon, 27 Jul 1998 17:45:59 -0400
To: "APRSSIG" <aprssig@tapr.org>
Message-ID: <001801bdb9a7$f3f2e220$aef9accf@richmazz>
Rendered body type: text/plain

This happened to me before.... Make sure "Accept GPS" is not checked
next to the com port for your TNC... I turned this on accidentally and my
house began to follow the mobile stations around my screen...

--
Rich Mazzeo, N3XKU, Fairless Hills, PA
Bucks County SkyWarn and A.R.E.S.
TNC is on >144.390<, Automatic Position Reporting System (Mailbox: -2)
FM Voice: 147.300+ / 147.150+ / 146.970- / 444.200+ / and 146.535 / 446.025
smplx
ICBM/APRS: =4010.25N/07450.69W- (Grid: FN20ne) Currently Running: WinAPRS
2.20

748. MFJ as a tracker

From: n8exf@juno.com (R L BOEHM)
Date: Mon, 27 Jul 1998 19:17:59 -0400
To: aprssig@tapr.org
Message-ID: <19980727.192315.14662.1.N8EXF@juno.com>
Rendered body type: text/plain

Hi y'all,
Has anyone ever used a MFJ1270C as a tracker??
How did you get the data from the GPS to be transmitted??

Also, has anyone had a problem with the TNC having a brain fart after
entering data? When I issue a command such as UNP, Beacon, or CMSG and
hit return, nothing happens until I turn the TNC off and back on. I did a
firmware reset and still had the same problem.

73 de Bob, N8EXF // KN
homepage   http://www.qsl.net/n8exf

Igloos are polar bear snacks, crunchy on the outside, warm and chewy on
the inside.

_____
You don't need to buy Internet access to use free Internet e-mail.
Get completely free e-mail from Juno at http://www.juno.com
Or call Juno at (800) 654-JUNO [654-5866]

749. Re: [APRSSIG:26578] [amsat-bb] Oshkosh (fwd)

From: Jon Ogden <jono@enteract.com>
Date: Mon, 27 Jul 98 19:01:33 -0500
To: <bruninga@nadn.navy.mil>, <aprssig@tapr.org>
Message-ID: <199807272353.SAA06846@tapr.org>
Rendered body type: text/plain

>Another question is will there be any APRS there?

Well, unfortunately, all APRS activity in Wisconsin ends just north of
Milwaukee. Even if folks were up there, there aren't any digis to get
them to the rest of the world. I wish those folks in the hinter lands
would come on line and get APRS going up there. It's cool to see the
good ol' country folk in central Illinois come alive, now we just need
northern Wisc and Northern Mich (LP).

73,

Jon
KE9NA

Jon Ogden
KE9NA

http://www.qsl.net/ke9na

"A life lived in fear is a life half lived."

750. Re: [APRSSIG:26576] Re: solar power

From: Byron Smith <wa6ylb@theworks.com>
Date: Mon, 27 Jul 1998 16:54:37
To: bruninga@nadn.navy.mil
Cc: aprssig@tapr.org
Message-ID: <3.0.1.16.19980727165437.0a87ed3e@theworks.com>
Rendered body type: text/plain

Gee, this is great, but with a house with a single meter on it, how does
the power company know your using the power at night? most all of
residential power meters are accumlative kinds. No "what time of day"
information on them.
I suspect your talking about some kind of special power user (industrial)
that would have such a high demand that 2 cents vs 10 cents is tremendious.

-snip from orginal text---

>Once one invests in a battery backup system, one should not overlook
>the use of off-peak cheap electricity to charge your batteries from the
>power company at night. In my house, electricity is only 2 cents per KW
>between 11PM and 7AM yearround compared to 8 and 10 cents during the
>days. Thus, the economic incentive to go solar is drastically reduced,
>because the pay back time is then 4 times longer than advertized!

-snip--

  But dont overlook the 75% discount off-peak power
>either...

Byron Smith
wa6ylb@theworks.com - Website: theworks.com/~wa6ylb
wa6ylb@wa6ylb.#cca.ca.usa.noam

If a turtle doesn't have a shell, is he homeless or naked?

751. DANGERs assorted

From: John Langtry <ve3nec@castle.on.ca>
Date: Mon, 27 Jul 1998 20:33:07 -0400
To: aprssig@tapr.org
Message-ID: <35BD1C43.31A1@castle.on.ca>
Rendered body type: text/plain

Folks :

Neither Greg nor Arte were kidding with their messages
about lead-acid batteries and the hydrogen that they
produce when under charge. These batteries were never
intended for use inside your home.

But to add to the collection of "dangers"; I wonder
how many of you have part of your GPS tracker system
sitting on top of the dashboard ? (I was guilty !)

Modern cars and light duty trucks are equipped with
a "safety" device known as an airbag or SRS. When these
things "deploy"; they make a howitzer look like a
child's toy ! Imagine the force it takes to "deploy"
one of these in the range of 30 ~ 70 milliseconds,
to a volume of about 2.5 cubic feet ! Now, imagine
your GPS unit flying towards your face, or the face
of your loved one, with that kind of force behind it !

Read your owner's manual ! (The book that comes with
every car and truck which no one reads until it won't
go. That thing...) You'll note that not even a light
sticker should be placed on the airbag assembly; let
alone, GPS gear, radio gear, etc.

What cause's it to "deploy" ? (Apart from the obvious.)
A microprocessor which observes (at least) an
accelerometer, combined with (usually) one or more
body crush sensors. The nasty part is that this processor
is only designed to ignore R.F. at the 5 watt level and
at 800 MHz and above. Higher powers and/or lower frequencies,
well, according to the big three, "your on your own !"

Again, guess where they hid this information ? Yep, in your
owner's manual ! It just might be worth having a quick read.

vy 73 de John VE3NEC

--
                        John Langtry, VE3NEC
                         Credit Lodge # 219
                           905-873-8715
                           ve3nec@rac.ca
                           * * * * *

752. (no subject)

From: Wes Johnston <kd4rdb@eagnet.com>
Date: Mon, 27 Jul 1998 20:50:04 -0400
To: aprssig@tapr.org, msproul@ap.org
Message-ID: <3.0.32.19980727205001.0073bae0@gena>
Rendered body type: text/plain

Many thanks to those of you who replied....

Allow GPS on serial port was ON... now off.

HEADERLN was OFF, now OFF.

I have noticed when working in the VHF terminal window that if I'm typing a
command to the TNC, and a packet comes in, what i've typed gets ADDED to
the callsign... for example...

I'm typing MON ON, and get as far as typing MON when a packet is rx'ed...
winaprs accepts this as MONN7GZT-6>APRS,WIDE,TRACE:.............

AND it announces that there is a 'new station'. Perhaps this type of
problem caused winaprs to parse a gps string rx'ed on the air wrong?

next question.... how do I reset my house's veolicity to 0?
Wes
Email: mailto:kd4rdb@eagnet.com
AlphaPager: mailto:kd4rdb@eagnet.com - subject line: PAGER
APRS: http://www.qsl.net/kd4rdb/aprs.htm

CAMPER FOR SALE: http://www.qsl.net/kd4rdb/camper.htm

753. Delivery Confirmation RE: [APRSSIG:26596] APRSSIG digest 1630

From: "Edgardo Molina" <xe1xus@molinet.dyn.ml.org>
Date: Mon, 27 Jul 1998 20:21:10 -0500 (CDT)
To: aprssig@tapr.org
Message-ID: <0000000080@molinet.dyn.ml.org>
Rendered body type: text/plain

[Empty message body]

754. Re: [APRSSIG:26379] Re: Pico Packet (2-serial port) problems with a Macintosh

From: Bill Vodall <wa7nwp@bigsky.com>
Date: Mon, 27 Jul 1998 19:13:17 -0700 (PDT)
To: tapr@kq4tv.aprs.net
Cc: aprssig@tapr.org
Message-ID: <199807280213.TAA10417@eagle.bigsky.com>
Rendered body type: text/plain

This is a old thread, but I may have a little additional info.

>
> Jon Ogden (jono@enteract.com) on 7/18/98 8:09 PM wrote:
>
> >
> >Did you think there could be something wrong with your Mac? If it
> >communicates with the Newton, it should communicate with the Mac. They
> >have exactly the same serial interface. Also, be sure that you haven't
> >turned Apple Talk on on the particular serial port you wish to use.
> >
> I guess I should have mentioned that I tested the Mac with a KPC-3 and
> SUpra Modem and it communicates with those devices just fine. I think
> there is probably some voltage threshold adjustment that might be done to
> make things work. BTW the problem is not just with my notebook Mac it is
> with any Mac.
>
> >
> >If it communicates with one device it should communicate with any. Just
> >make sure baud rates, etc. are correct.
> >
> Yes it should, but it doesn't.
>
> Bruce

Folks have come up with many different ways to do RS232 voltage
levels. Not all are created equal. Nor work with all drivers.

In addition, I believe the Mac isn't true RS-232. I think it's
RS-422.   Very close but not exactly the same.

So the voltage levels may be just different enough to not work
with one RS-232 device but to work others.

Bill - WA7NWP

755. Re: [APRSSIG:26541] IGate POSITs

From: Bill Vodall <wa7nwp@bigsky.com>
Date: Mon, 27 Jul 1998 19:19:44 -0700 (PDT)
To: n2zrc@webspan.net
Cc: aprssig@tapr.org
Message-ID: <199807280219.TAA10469@eagle.bigsky.com>
Rendered body type: text/plain

> Hi all,
>
>   One other little bugaboo I've noticed is that many stations have no
> contact information in either their POSIT or STATUS packets. Just in
> case someone needs to get in touch with you it might be a good idea for
> you to include either your e-mail address, packet BBS address, web page
> (or all of these) in one of these packets. This way, newbies monitoring
> the APRS frequency will be able to find out what all that gobbledygook
> on their terminal screen is about, problems with your station unknown to
> you could be easily reported and you might make a few more friends in
> the process. 73
> --
> Arte Booten <n2zrc@webspan.net> EC/RO for Bronx County, NYC ARES/RACES

Maybe the APRS packages could respond to a ?APRSX? type query with a
packet of the above mentioned personal info. Might be a bit cleaner
than repeatedly broadcasting it.

Bill - WA7NWP

756. APRS demo with "Neighborhood Night Out"

From: "Mark D. Conner" <mconner@null.net>
Date: Mon, 27 Jul 1998 22:16:34 -0500
To: aprssig@tapr.org, aprsplus@k8sn.org
Message-ID: <3.0.5.32.19980727221634.00835830@mail.neonramp.com>
Rendered body type: text/plain

Hi all,

Just wanted to let you know that our radio club (Bellevue ARC) will have an
APRS demonstration in conjunction with a ham radio setup at Bellevue's
"Neighborhood Night Out" this Saturday (1 Aug). We plan to have an APRS
tracker set up in one of the Bellevue Police Dept's cruisers to have a
real-time demo of the capability of APRS.

The mobile rig will consist of a Delorme Tripmate, KPC-3 v6.0, Kenwood
TM-261, 7Ah gel-cell, and a mag-mount. Fixed station will be a laptop
running APRSPlus and another KPC3. Look for the callsign W0WYV-9 - we may
have an Igate set up by the end of the week in the Omaha area.

I'll let you know how it goes afterwards. If nothing else, we should
attract a lot of attention from the other police officers there. One of
the officers is a ham radio operator, too - that's how we were able to
arrange this. Hopefully this will set some others out there to thinking of
different ways to promote APRS.

On a somewhat different subject, Kansas Near Space Project will have their
next balloon launch on 8 Aug (ppd from 25 Jul due to rain) from near
Manhattan KS. Look for KD4STH(-?) in NE Kansas early in the morning. For
details and maps showing previous 1998 launches, see
http://www.neonramp.com/~mconner/knsp.html.

73 de Mark N9XTN

Mark D. Conner
Internet: mconner@null.net Packet: N9XTN@WA0ZQG.IA.USA.NA

Homepage: http://www.neonramp.com/~mconner
"Arrogance and stupidity, all in the same package.....how efficient
  of you!"   - Ambassador Londo Mollari, Babylon 5

757. NJ Visit

From: "Ken Mirabella" <kjm@flo-bin.com>
Date: Mon, 27 Jul 1998 20:52:33 -0000
To: <aprssig@tapr.org>
Message-ID: <001801bdb9a0$7be73da0$5224adce@laptop>
Rendered body type: text/plain

Greetings NJ APRS users,

I am visiting my parents in Little Falls, NJ and brought the APRS stuff
along. Not to much activity in Northern NJ I see on 144.39

Look for my tent, KM6YH. I will be on sparodically.

73, all

Ken

758. Re: [aprsplus] APRS demo with "Neighborhood Night Out"

From: "Ray J. Vaughan" <rvaughan@gate.net>
Date: Tue, 28 Jul 1998 00:22:46 -0400
To: "Mark D. Conner" <mconner@null.net>
Cc: aprssig@tapr.org, aprsplus@k8sn.org
Message-ID: <1.5.4.32.19980728042246.00b49edc@pop.gate.net>
Rendered body type: text/plain

At 10:16 PM 7/27/98 -0500, you wrote:
>Hi all,
>
>Just wanted to let you know that our radio club (Bellevue ARC) will have an
>APRS demonstration in conjunction with a ham radio setup at Bellevue's
>"Neighborhood Night Out" this Saturday (1 Aug). We plan to have an APRS
>tracker set up in one of the Bellevue Police Dept's cruisers to have a
>real-time demo of the capability of APRS.
>
>The mobile rig will consist of a Delorme Tripmate, KPC-3 v6.0, Kenwood
>TM-261, 7Ah gel-cell, and a mag-mount. Fixed station will be a laptop
>running APRSPlus and another KPC3. Look for the callsign W0WYV-9 - we may
>have an Igate set up by the end of the week in the Omaha area.
>
>I'll let you know how it goes afterwards. If nothing else, we should
>attract a lot of attention from the other police officers there.

A word of warning.... don't get your hopes up about all positive responses.
I've been involved in two tracker installations (Teletrac) into fleets.

One was a cable company, the other was a city PD. Neither went over very
well.   The cable company project was never approved after threats of
Unionization were brought up. In the case of the Police Department, all of
the trackers were found and 'disabled'.   It turns out that private industry
employees and officers alike don't want their every move tracked. Many felt
that, when they're on the job, their supervisor had no right to know where
they were at a moments notice. We weren't talking undercover here, all
installations were in marked patrol cars.

This is a classic case of 'doing the right thing' isn't so right.

By all means, go forward with the demo... but maybe suggest tracking rescue
units or fire trucks. When humans get into the mix, things can take an
unexpected turn real fast. Just wanted to warn you that the reaction you
get might not be as warm as you would expect.

Ray, KD4BBM

759. Re: [APRSSIG:26600] APRS demo with "Neighborhood Night Out"

From: Jeff Brenton <jeffb@espi.com>
Date: Tue, 28 Jul 1998 00:45:50 -0500
To: mconner@null.net
Cc: aprssig <aprssig@tapr.org>
Message-ID: <35BD658E.5817@espi.com>
Rendered body type: text/plain

One thing I'll caution you on with the tracker in the cruiser:

Hopefully, they won't have any VHF police frequencies to worry about,

because the tracker, even at 5w, will blank out the receive on their VHF
receiver(s). I even hear mine a bit on 220, in the form of desense.

If they're on 800 MHz trunking, forget I suggested the problem; it won't
be one. But, even in the shadow of our EOC's tower, I *know* when my
tracker is transmitting, by the loss of signal strength, with 4' between
the antennas.

We're working on eventually getting Mic-Encoders into the system out
here, so we can track our spotters. No more "where are you?!?"
transmissions; when they key up to give their reports, we will know
EXACTLY where they are!
--

Jeff Brenton, Ham Radio call KA9VNV
Questionable web page: http://www.dididahdahdidit.com
Covert supporter of the Vast Right Wing Conspiracy (tm)

Mark D. Conner wrote:
> Just wanted to let you know that our radio club (Bellevue ARC) will
> have an APRS demonstration in conjunction with a ham radio setup at
> Bellevue's "Neighborhood Night Out" this Saturday (1 Aug). We plan to
> have an APRS tracker set up in one of the Bellevue Police Dept's
> cruisers to have a real-time demo of the capability of APRS.

760. Re: APRS demo with "Neighborhood Night Out"

From: Cap Pennell <cap@cruzio.com>
Date: Mon, 27 Jul 1998 23:14:55 -0700
To: rvaughan@gate.net, aprssig@tapr.org, aprsplus@k8sn.org
Message-ID: <3.0.5.32.19980727231455.0088b660@mail.cruzio.com>
Rendered body type: text/plain

At 11:25 PM 7/27/98 -0500, Ray J. Vaughan KD4BBM wrote:
<snip>
>One was a cable company, the other was a city PD. Neither went over very
>well.   The cable company project was never approved after threats of
>Unionization were brought up. In the case of the Police Department, all of
>the trackers were found and 'disabled'.   It turns out that private industry
>employees and officers alike don't want their every move tracked.
<snip>
>By all means, go forward with the demo... but maybe suggest tracking rescue
>units or fire trucks. When humans get into the mix, things can take an
>unexpected turn real fast. Just wanted to warn you that the reaction you
>get might not be as warm as you would expect.

Strangely enough <grin>, I have experienced the same reaction from firefighters! As a novelty or
experiment, fine. As a full-time "management tool", no thanks. As a fire captain told me, "It doesn't
really need an on/off switch, as long as it has a fuse."
73, Cap KE6AFE
--
Cap Pennell
Santa Cruz, CA 95062-1002   3658.93N/12200.91W [CM86xx]
email: cap@cruzio.com   home page: http://members.cruzio.com/~cap
packet radio: KE6AFE @ki6eh.#wcca.ca.usa.noam

761. FAQ: Display all heard stations

From: Darryl Smith <vk2tds@ozemail.com.au>
Date: Mon, 27 Jul 1998 21:10:21 +1000
To: aprssig@tapr.org
Message-ID: <35BC601C.479C433F@ozemail.com.au>
Rendered body type: text/plain

What follows might be a FAQ. I am getting some of the people using
packet here in Sydney, Australia to put the [QF56] square brackets in
the beacon text. But I can't seem to get WinAPRS to see these stations
unless they are digi-ed to ID, or APRS or something else. There must be
a way for APRS to display these lines.

I have got one user sending the beacon through ID and that
automaticallty come up.

I know that beaconing to APRS is the right way to do things, but is it
really needed? Here in Australia we are just starting to get into APRS
and this provides one more obsticle.

Many thanks

Darryl SMith
VK2TDS

```
VK2TJE>VK2WI:[QF55JV] * JOHN. VK2TJE..AMBARVALE * FISHERS GHOST ARC.
MEMBER *
VK2TJE>VK2WI:[QF55JV] * JOHN. VK2TJE..AMBARVALE * FISHERS GHOST ARC.
MEMBER *
VK2TJE*>VK2WI:[QF55JV] * JOHN. VK2TJE..AMBARVALE * FISHERS GHOST ARC.
MEMBER *
VK2AAB*>MAIL-1:[QF56NH]17-Jul 00:30 <<< PACTOR Mailbox VK2AAB SYDNEY >>>
448 act
VK2AAB*>MAIL-1:[QF56NH]21-Jul 23:30 <<< PACTOR Mailbox VK2AAB SYDNEY >>>
497 act
```

762. Re: [APRSSIG:26593] Re: [amsat-bb] Oshkosh (fwd)

From: "Paul J. Toth - K2SEC" <ptoth1@tampabay.rr.com>
Date: Tue, 28 Jul 1998 07:11:22 -0400
To: aprssig@tapr.org
Message-ID: <35BDB1DA.C877EEE8@tampabay.rr.com>
Rendered body type: text/plain

Jon....

There is one potential, albeit a temporary fix to this deficiency. If someone is headed to Oshkosh, have them take a laptop capable of supporting an APRS Digi AND an IGATE (through a dial-up connection). While it would certainly be a lot more advantageous of the local Hams had a presence, this temporary fix would, at least, give the rest of the world a view of the activity, B'Gosh.

73!

Paul J. Toth
K2SEC
West Central Florida SKYWARN

Jon Ogden wrote:

> >Another question is will there be any APRS there?
>
> Well, unfortunately, all APRS activity in Wisconsin ends just north of
> Milwaukee. Even if folks were up there, there aren't any digis to get
> them to the rest of the world. I wish those folks in the hinter lands
> would come on line and get APRS going up there. It's cool to see the
> good ol' country folk in central Illinois come alive, now we just need
> northern Wisc and Northern Mich (LP).
>
> 73,
>
> Jon
> KE9NA
>
> ------------------------------------
> Jon Ogden
> KE9NA
>
> http://www.qsl.net/ke9na
>
> "A life lived in fear is a life half lived."

763. Re: Neighborhood Night Out

From: "Paul J. Toth - K2SEC" <ptoth1@tampabay.rr.com>
Date: Tue, 28 Jul 1998 07:23:41 -0400
To: aprssig@tapr.org
Message-ID: <35BDB4BC.5C30F8AF@tampabay.rr.com>
Rendered body type: text/plain

The organization I currently work for (a Public Transit Agency) will equip its fleet of buses with commercial DGPS (called Automatic Vehicle Locators) within the next year. In doing so, the agency will be able to automatically collect a lot more information about fleet operations in the field than just position.

I am sure we will have drivers who will not be happy about it. And we could even lose a few who take umbrage about "Big Brother" looking over their shoulder. On the other hand, if they are doing the job they are paid to do, they should have nothing to worry about.

I have heard some of the stories about organizations installing GPS trackers in their vehicles...followed by the dismissal of employees who

were doing something other than what they were paid to be doing. Sounds
like another example of that famous law of physics: "For every action,
there is an equal and opposite reaction."

Good luck with your demo on August 1st!

73!

Paul J. Toth
K2SEC
West Central Florida SKYWARN Group

764. Re: Terminal window

From: Mark Sproul <msproul@ap.org>
Date: Tue, 28 Jul 1998 09:22:29 -0400
To: kd4rdb@eagnet.com, aprssig@tapr.org
Message-ID: <v03110702b1e37dca9ca1@[165.1.27.20]>
Rendered body type: text/plain

>
>I have noticed when working in the VHF terminal window that if I'm typing a
>command to the TNC, and a packet comes in, what i've typed gets ADDED to
>the callsign... for example...
>
<SNIP>

The only way for me to avoid this is to NOT processes any data if the
terminal window is open, I will look at and see if I can figure something
else out.

Mark

____
Mark Sproul |
Software Engineer @ Assoc Press |Work: 609-860-7120
msproul@ap.org |Fax: 609-860-7129
____

765. Precission Mapping and WinAPRS

From: Mark Sproul <msproul@ap.org>
Date: Tue, 28 Jul 1998 09:52:43 -0400
To: aprssig@tapr.org
Message-ID: <v03110707b1e387a7eea7@[165.1.27.20]>
Rendered body type: text/plain

>From several of the questions I have received and from some of the comments
on the sig, there seems to be some confussion about the operation of
Precission Mapping and WinAPRS

        Precission Mapping DOES NOT have to be running and in fact does
        NOT even need to be installed on your hard disk. Just install
        the OCX and have the CD-ROM in the drive at it works. It does
        NOT require both programs, it is all done WITHIN WinAPRS.

Mark

____
Mark Sproul |
Software Engineer @ Assoc Press |Work: 609-860-7120
msproul@ap.org |Fax: 609-860-7129
____

766. Com-Over Flow

From: Robert Burton <kd4ydc@bellsouth.net>
Date: Tue, 28 Jul 1998 09:53:55 -0400
To: aprssig@tapr.org
Message-ID: <35BDD7F1.E7AEE4CE@bellsouth.net>
Rendered body type: text/plain

Just got a GPS45 and a KPC3 (5.1) and am running this with a 8088
laptop.
(Not tracker mode). Made up a hsp cable from:
http://Othello.localaccess.com/nwaprs/hsp.htm
I keep having problems with I/O glitches and Com-Over Flows to the
point that it locks up. I also see the NMEA sentences from the GPS

along the bottom constantly (cannot gain control of the keyboard
sometimes). Am desperately trying to get this worked out for our
trip to Disney World this Sunday. Any ideas?? Running
KD4YDC-9 if you want to see.
HELP!!!!!
Robert
KD4YDC

767. Re: [APRSSIG:26604] Re: APRS demo with "Neighborhood Night Out"

From: Wes Johnston <kd4rdb@eagnet.com>
Date: Tue, 28 Jul 1998 10:05:06 -0400
To: aprssig@tapr.org
Message-ID: <3.0.32.19980728100505.006c6f68@gena>
Rendered body type: text/plain

As far as companies wanting to track people and trackers being disabled,
well you put MIC encoders on the radios... but then they'll just switch the
radio off and be COMPLETELY unreachable... so you put gel cells in the
trackers. When the power is switched off, the tracker transmits an
emergency beacon. Word will get around very quickly when someone gets
their hand slapped for tampering with the tracker. You can also have a
fake wire and LED on the tracker... let them cut a wire and see the LED's
go off even though the tracker is still on.

I know several truck drivers, one of which is a very resourceful ham. He
has found how to change the frequency of the tracker in his truck so that
it can't reach the bird. Of course it resets to the default frequency when
the power cycles. I've also heard of truckers parking under bridges and
power lines to spoof the GPS.

On the other hand, my resourceful ham trucker has also learned how to use
the system to his advantage. He reviews the dispatch list, sees that the
2nd load on the list is desirable. He then contacts a fellow driver who is
scared to death of the computer in truck. Tells the poor guy that there is
a "great" load 1st on the dispatch list. The poor guy stops at a payphone,
calls the dispatcher and takes the undesirable 1st load. Meanwhile, my
friend is watching the list from the cab of his truck and snatches up the
desirable load ASAP.

Wes
Email: mailto:kd4rdb@eagnet.com
AlphaPager: mailto:kd4rdb@eagnet.com - subject line: PAGER
APRS: http://www.qsl.net/kd4rdb/aprs.htm

CAMPER FOR SALE: http://www.qsl.net/kd4rdb/camper.htm

768. .POS files

From: Bob Bruninga <bruninga@nadn.navy.mil>
Date: Tue, 28 Jul 1998 10:16:48 -0400 (EDT)
To: Bill Vodall <wa7nwp@bigsky.com>
Cc: aprssig@tapr.org
Message-ID: <Pine.SOL.3.96.980728100915.21552E-100000@arctic>
Rendered body type: text/plain

On Mon, 27 Jul 1998, Bill Vodall wrote:

> ... Yesterday I drove the 700 miles ... I did stop at the rest areas
> along the way and gathered waypoints for a RESTAREA.POS file.

I hope everyone is aware of the potential for the .POS files. These are
supported by all versions of APRS and provide a quick and easy way of
overlaying all kinds of things on your maps. We had hoped that the APRS
users would get excited about these files and build all kinds of them.

Ones that already exist are: RADIOSHACKS, AIRPORTS, WRECKS, DIGIS, GATES,
FREQS, NWSstations, etc

Here are some examples that should prove very useful for RACES/ARES:

   RED Cross shelters
   All county facilities
   Schools
   Hospitals

Or for general Hamming:

   CAMPGROUNDS

All you have to do is enter the name and LAT/LONG. Then in APRSdos just

hit the MAPS-OVERLAYS-OTHER and the name of the file...

Here is a great opportunity to contribute...

de WB4APR

769. my house is moving!

From: Wes Johnston <kd4rdb@eagnet.com>
Date: Tue, 28 Jul 1998 10:17:42 -0400
To: aprssig@tapr.org, mark@ap.org
Message-ID: <3.0.32.19980728101740.0073d810@gena>
Rendered body type: text/plain

To stop winaprs from getting gps sentances from off the air and thinking
that they are it's own, UNCHECK the "allow gps" box under settings / serial
port.

When working in terminal window, while typing a command to the TNC when a
line of text is recieved causes winaprs to accept what i've typed as part
of the call sign of the rx'ed packet. Solve this problem by telling the
TNC not to send data to terminal while you are typing... FLOW ON

Wes
Email: mailto:kd4rdb@eagnet.com
AlphaPager: mailto:kd4rdb@eagnet.com - subject line: PAGER
APRS: http://www.qsl.net/kd4rdb/aprs.htm

CAMPER FOR SALE: http://www.qsl.net/kd4rdb/camper.htm

770. Re: [aprsplus] APRS demo with "Neighborhood Night Out"

From: Bob Bruninga <bruninga@nadn.navy.mil>
Date: Tue, 28 Jul 1998 10:32:26 -0400 (EDT)
To: "Ray J. Vaughan" <rvaughan@gate.net>
Cc: aprssig@tapr.org
Message-ID: <Pine.SOL.3.96.980728102856.21552I-100000@arctic>
Rendered body type: text/plain

On Tue, 28 Jul 1998, Ray J. Vaughan wrote:

> A word of warning.... don't get your hopes up about all positive responses.
> I've been involved in two tracker installations (Teletrac) into fleets.
> ...... Just wanted to warn you that the reaction you
> get might not be as warm as you would expect.

In the early days, all of the satellite trackers on trucks were mounted on
the top of the cab. Turns out, *ALL* of them seem to be destroyed by "low
hanging trees" within a few weeks.

Think about it. It doesnt take long for the word to get out as to where
just the perfect tree limb is...

Now they mount them lower, behind the cab...

771. Re: [APRSSIG:26605] FAQ: Display all heard stations

From: Bob Bruninga <bruninga@nadn.navy.mil>
Date: Tue, 28 Jul 1998 10:41:30 -0400 (EDT)
To: Darryl Smith <vk2tds@ozemail.com.au>
Cc: aprssig@tapr.org
Message-ID: <Pine.SOL.3.96.980728103542.21552J-200000@arctic>
Rendered body type: text/plain

On Tue, 28 Jul 1998, Darryl Smith wrote:

> What follows might be a FAQ. I am getting some of the people using
> packet here in Sydney, Australia to put the [QF56] square brackets in
> the beacon text. But I can't seem to get WinAPRS to see these stations
> unless they are digi-ed to ID, or APRS or something else. There must be
> a way for APRS to display these lines.

APRS is designed to look for "beacon" packets only and therefore only
looks for certain TOCALLs. THere are lots that APRS recognizes such as
BEACON, QST, MAIL, CQ, APRS, ID, TEST, etc... All of the versions of APRS
allow you to turn these filters off temporarily. In APRSdos it is the
CONTROLS-FILTERS-OTHER command.

The reason APRS defaults to having these filters ON is so that sub-groups
of APRS users can choose to operate ALTERNATE nets or, ALTNETS on the same
frequency while ignoring all other traffic. Thus, everyone involved in a

march-a-thon, for example can choos the ALTNET of MTHON for example, and
their screens will only show each other, and their traffic will NOT
clutter up all the other APRS screens in the area...

If people use Kantronics TNC's, then their BText is ONLY transmitted to
the TOCALL of BEACON. All other TNC's use the call in the UNPROTO field.

de WB4APR, Bob

772. Re: [APRSSIG:26610] Com-Over Flow

From: Bob Bruninga <bruninga@nadn.navy.mil>
Date: Tue, 28 Jul 1998 10:50:02 -0400 (EDT)
To: Robert Burton <kd4ydc@bellsouth.net>
Cc: aprssig@tapr.org
Message-ID: <Pine.SOL.3.96.980728104638.21552P-100000@arctic>
Rendered body type: text/plain

On Tue, 28 Jul 1998, Robert Burton wrote:

> Just got a GPS45 and a KPC3 (5.1) and am running this with a 8088
> I keep having problems with I/O glitches and Com-Over Flows to the
> point that it locks up....

New GPS's dump so much data that it may overload an 8088. My suggestion
for a QUICK fix, is to replace the HSP with a push button switch. It
passes RXD from the TNC to the PC normally. WHen button is pushed, it
passes GPS data. THus, as you drive, whenever you want a fix, you press
and hold the button for a second or so.

It may NOT solve all the problems, and it is a kludge, but it will get you
on the road in a short time. This way, your finger has control of
overflows...

bob

Also, see if you can simplify the data fromt he GPS. Choose an output
option that is less verbose, but still has the $GPRMC senctence in it...

de WB4APR

773. Re: APRS demo with "Neighborhood Night Out"

From: "Paul Christenson" <n3eop@hotmail.com>
Date: Tue, 28 Jul 1998 08:18:15 PDT
To: aprssig@tapr.org
Message-ID: <19980728151815.2113.qmail@hotmail.com>
Rendered body type: text/plain

>It turns out that private industry employees and officers alike don't
>want their every move tracked.

Having been one of those employees, I know how true that is. For some
unknown reason, the fuse for the GPS in my van seemed to blow on a
regular basis. <G>

However, routine tracking of police vehicles may not be a particularly
good idea. Imagine the implications if someone sets up a portable
receiver (laptop, etc.) in their car, sits in the parking lot until all
of the patrol cars are several miles away, then goes and robs the bank.

One version that would likely be acceptable to both management and the
officers would be for the tracker to sit silent most of the time, but
come on with rapid updates (~15 sec) when the light bar is active.
(This could also cut down on "light bar abuse". I've seen far too many
police officers turn on the lights to go through an intersection, then
turn them back off once through. I know that this could be legit, but
it could be that the officer simply doesn't want to wait for the light.)

Also, if the tracker had to be manually shut off after switching off the
lights, it could help catch stolen patrol cars.

_____
Get Your Private, Free Email at http://www.hotmail.com

774. Re: [APRSSIG:26615] Re: FAQ: Display all heard stations

From: Jon Ogden <jono@enteract.com>
Date: Tue, 28 Jul 98 12:32:43 -0500
To: "Bob Bruninga" <bruninga@nadn.navy.mil>, <aprssig@tapr.org>
Message-ID: <199807281729.MAA08220@tapr.org>

Rendered body type: text/plain

>If people use Kantronics TNC's, then their BText is ONLY transmitted to
>the TOCALL of BEACON.

Huh?

It doesn't work that way on my KAM. At least I think not. The beacon is
sent via the same path that my "UN" is set to.

73,

Jon
KE9NA

Jon Ogden

jono@enteract.com
www.qsl.net/ke9na

"A life lived in fear is a life half lived."

775. MS 150 Wrap Up

From: Doug Wetzel <dwetzel@earthlink.net>
Date: Tue, 28 Jul 1998 12:11:36 -0700
To: nwaprssig@localaccess.com, aprssig@tapr.org
Message-ID: <3.0.32.19980728121134.01218898@earthlink.net>
Rendered body type: text/plain

The 1998 MS 150 Bike Tour is now history, and for those of you who didn't
participate this year, you missed a great opportunity to do public service
and learn more about APRS in the process! I haven't heard the final
analysis from the point of view of WA7NUU, Bob Calkins, who is the
communications coordinator for this event, but I wanted to do a little PR
while things are still fresh in my mind.

There were about 800 riders this year, down from previous years, I'm told.
This could possibly be due to the weather, which hovered around the 90 mark
both days.

This was really the first formal event in the Puget Sound area in which
APRS played a real part. We had six trackers available, along with several
portable digipeaters to fill in holes. The trackers were placed in the sag
vehicles, responsible for picking up exhausted bikers and their bikes and
transporting them to rest areas.

The command post utilized APRSplus for Street Atlas, with the SA5 maps.
Trackers utilized various combinations of tncs and handhelds, with the
GPS30/KPC3 combination the most prevalent configuration.

Observations:

1.   Several of the local fellows (MANY thanks to K7OFT and N7RIG) drove the
route a couple of times to check coverage and determine where the portable
digipeaters might best be used. If your area is covering and event and NOT
considering a trial run, please reconsider. We were able to provide
coverage over about 70 percent of the route this year, which went through
some very heavily wooded valleys.

2.   A separate APRS coordinating frequency was most helpful for our units.
We used a wide coverage UHF repeater, while all the rally coordination took
place on two other VHF frequencies. All APRS units and APRS support people
should be capable on both the APRS frequency AND the event coordination
frequency. We did have a unit who was not VHF capable, and it was
sometimes awkward for the control center to get info from him. At the very
least, make sure all the APRS people are equipped for the main coordination
frequency, if a choice has to be made.

3.   Jeff Brenton's comments in APRSSIG 26603 regarding co-channel
interference on VHF is right on the money. We experienced some level of
interference between the packet trackers and the VHF coordination frequency
on all units, despite efforts to separate APRS and voice antennas as much
as possible. One or two of the units refused to have the tracker running
at any time because of this. We're looking at ways to fix this next year,
although at this point the only two options we seem to have are to move
APRS to UHF, or use Mic-E's for all the mobile units so affected. We had a
couple Mic-E's this year, but didn't quite have enough time to proof a
cross link for this event. That's on the list of things to do before next
year.

The quality of the mobile installation had a lot to do with the amount of APRS interference, though. The most susceptible installations were those where the VHF radio for voice AND the tracker were both plugged into the cigarette lighter and both had mag mount antennas. Those with good grounding and permanently mounted voice antennas had far less interference. This should be a no brainer as far as good mobile installation design is concerned, but I have to admit that although I know better, I'm as lazy as the next guy and I have the same problem on my mobile installation even with both units permanently mounted.

Had we not had this problem, ALL of the trackers would have performed as expected.

4. We also found that for this part of the country, a parallel engine GPS unit would be far better. We had a couple of GPS45s and 30s, and the one Tripmate we had outperformed them every single time. The 30s have an annoying habit, apparently when they try to hold a two satellite 2D fix, of losing track of themselves. At one time or another, ALL of the GPS30 based trackers gave us false positions...in fact we had one, before we reset it, insist that the sag unit was sailing up the Straight of Juan de Fuca at about 250kts, headed for the Aleutians and eventually Japan. If the route were totally wooded, this would have been a major problem, but there was enough clear area that they eventually found themselves again.

5. Sag operations require the vehicle to do a lot of stop and start, with people getting in and out frequently. One fairly regular occurrence would be that the power connector to the GPS would get kicked or knocked out of its socket. Whether the power came from the tracking unit or from the lighter plug, some kind of locking power connection would have solved a lot of problems throughout the day. Once the sag operators became familiar with their units, it was a simple matter for them to check the GPS power periodically and make sure the connection was secure, but we would like to eliminate the need to do that.

6. Fortunately, Murphy smiled brilliantly at the sweep vehicle, which was the one following the last rider on the course. It only required one reset of the GPS, and generally was the most reliable unit of the event. That fact alone was enough to impress the comm folks that APRS is of immense benefit for this rally.

7. Despite our best efforts, we still found ourselves doing a lot of last minute preparation. If you aren't preplanning your event and checking things 90 days in advance, you're already late!

Special thanks go out to K7OFT, N7RIG, and K7DVM, who are not only APRS evangelists, but also worked their sterns off during the real event, doing real work while K7IP was able to mess with the control center displays and generally keep the rally folks happy!

Doug Wetzel
K7IP
Seattle APRS Coordinator
47 38 00N 122 20 29W
ICQ 164635

dwetzel@earthlink.net

http://home.earthlink.net/~dwetzel

776. MS 150

From: Doug Wetzel <dwetzel@earthlink.net>
Date: Tue, 28 Jul 1998 12:28:59 -0700
To: nwaprssig@localaccess.com, aprssig@tapr.org
Message-ID: <3.0.32.19980728122858.01223ef0@earthlink.net>
Rendered body type: text/plain

I almost forgot to thank Dave, K7GPS, Richard, N7RIG,and Bob, K7OFT for providing portable trackers for the event. We couldn't have done it without them!

Doug Wetzel
K7IP
Seattle APRS Coordinator
47 38 00N 122 20 29W
ICQ 164635

dwetzel@earthlink.net

http://home.earthlink.net/~dwetzel

777. Delivery Confirmation RE: [APRSSIG:26619] APRSSIG digest 1631

From: "Edgardo Molina" <xe1xus@molinet.dyn.ml.org>
Date: Tue, 28 Jul 1998 14:40:49 -0500 (CDT)
To: aprssig@tapr.org
Message-ID: <000000008E@molinet.dyn.ml.org>
Rendered body type: text/plain

[Empty message body]

778. Re: [APRSSIG:26621] Delivery Confirmation RE: APRSSIG digest 1631

From: Jeff Brenton <jeffb@espi.com>
Date: Tue, 28 Jul 1998 15:37:03 -0500
To: xe1xus@molinet.dyn.ml.org
Cc: aprssig <aprssig@tapr.org>
Message-ID: <35BE366F.3F6@espi.com>
Rendered body type: text/plain

Could someone with power over the user list of APRSSIG please delete
"Edgardo Molina" <xe1xus@molinet.dyn.ml.org> until such time as he turns
off his automatic delivery confirmation notice?
--

Jeff Brenton, Ham radio call KA9VNV
http://www.espi.com
Questionable web page: http://www.dididahdahdidit.com
Covert supporter of the Vast Right Wing Conspiracy (tm)

779. Re: [APRSSIG:26603] Re: APRS demo with "Neighborhood Night Out"

From: Ralph Fowler <rwf@BSRG.org>
Date: Tue, 28 Jul 1998 08:55:31 -0400
To: aprssig@tapr.org
Message-ID: <Version.32.19980728084806.011763b0@ccegate.cokecce.com>
Rendered body type: text/plain

Jeff B. - we have not found this to be the case. Most VHF Public service
is on at least 152 MHz or higher and not nearly as prone to desense because
they use decent radios rather than the wide open junk that most Hams buy.

But... you HAVE again illustrated the case for the extreme necessity of
proper filtration on any 144.39 device being operated near a 145.xx
repeater. 120 KHz from the input isn't far- even with filtration and
decent receivers!

On your EOC, with the 4' spacing on antennas... what is the receive freq
that is being desensed by your tracker and what kind of radio? I am curios
and this may make a good illustration of the hidden desense problem.

If we (APRS) are not good neighbors, we could be asked not to play in the
neighbor's back yard any more.

73

Ralph

780. [APRSSIG 26619}Re: MS150

From: "Paul J. Toth - K2SEC" <ptoth1@tampabay.rr.com>
Date: Tue, 28 Jul 1998 17:26:06 -0400
To: aprssig@tapr.org, dwetzel@earthlink.com
Message-ID: <35BE41EE.F351FDDE@tampabay.rr.com>
Rendered body type: text/plain

Dear Doug:

Thanks for an excellent wrapup on your MS150 Event and your experiences
with APRS on the route.

I have previously been involved with several MS events in NJ where we
used APRS to track mobile support vehicles.. Your comments about using

a 220 or 440 frequency for voice coordination are right on the money. Or vice versa. Put your APRS stuff on 220 or 440 and run 2 meter voice coordination. either way, you will minimize (and probably eliminate) any interference from the APRS system.

SKYWARN operators...take what Doug said to heart. If you are operating APRS and voice comm on the same band during your SKYWARN Nets, you could miss an important detail. To combat this, we encouraged SKYWARN VoiceNets in NNJ to move to 70 cm. There was some fussing about the QSY of the voicenets at first. But folks got over it. The move made APRS and the voicenets reliable. And it put important Public Service traffic on the 70 cm band at a time when the FCC has been under a lot of presssure from the outside to take that band away from the Amateur Radio Service.

73!

Paul J. Toth
K2SEC
West Central Florida SKYWARN Group

781. SA 5.0 vs. Precision Mapping 3.0?

From: "Paul Knight" <paul.knight@prairiecomm.com>
Date: Tue, 28 Jul 1998 16:32:56 -0500
To: <aprssig@tapr.org>
Message-ID: <009001bdba6f$4992b710$1c01a8c0@raven.prairiecomm.com>
Rendered body type: text/plain

Hello! I am a relative newbie, and was wondering if the prevailing opinion swayed one way or the other regarding Street Atlas 5.0 or Precision Mapping 3.0, and APRS operation?

Thanks and 73,

Paul WD8DKY
paul.knight@prairiecomm.com

782. test msg

From: "John Palese" <c4wi@execpc.com>
Date: Tue, 28 Jul 1998 16:50:30 -0500
To: aprssig@tapr.org
Message-ID: <199807282152.QAA12622@mailgw02.execpc.com>
Rendered body type: text/plain

12345

783. Re: Apologies for an unforgivable mistake

From: "Edgardo Molina" <xe1xus@molinet.dyn.ml.org>
Date: Tue, 28 Jul 1998 17:17:35 -0500
To: <jeffb@espi.com>
Cc: "aprssig" <aprssig@tapr.org>
Message-ID: <002e01bdba75$8dd490a0$05fad1cf@molinae.InfonetMexico>
Rendered body type: text/plain

Dear Jeff and APRS Group,

There are not enough words to express how I feel for the mistake that I have done. I sincerely apologize for my lack of attention while configuring my e-mail gateway. I take the all the blame for not being responsible while configuring my equipment properly, allowing an automated delivery confirmation to send an unfrutful message to the list. It was never on purpose to bother the APRSSIG users. I corrected the problem immediately as I received your kind note.

Thank you for calling my attention. As I am a decent person I use to receive messages directly and not publishing my mistakes in public. I replied your message as soon as I got it copying the APRSSIG just as you did, to express everyone else my will of not commiting any other kind of mistakes.

I have enjoyed the amateur experimenting spirit for a long time since I was accepted to receive all the interesting postings from aprs users. I always try my best to behave as a gentleman. If the APRS group want me to unsubscribe from the list because of the unfortunate situation I have caused, I will be waiting for written notification and I will do it by myself, and not by anybody else power.

Please feel free to contact me at your convenience if you need anything else from me. Thank you.

Kindest regards
Edgardo Molina
XE1XUS
Mexico City
xe1xus@data.net.mx

-----Original Message-----
From: Jeff Brenton <jeffb@espi.com>
To: xe1xus@molinet.dyn.ml.org <xe1xus@molinet.dyn.ml.org>
Cc: aprssig <aprssig@tapr.org>
Date: Tuesday, July 28, 1998 3:39 PM
Subject: Re: [APRSSIG:26621] Delivery Confirmation RE: APRSSIG digest 1631

>Could someone with power over the user list of APRSSIG please delete
>"Edgardo Molina" <xe1xus@molinet.dyn.ml.org> until such time as he turns
>off his automatic delivery confirmation notice?
>--
>
>Jeff Brenton, Ham radio call KA9VNV
>http://www.espi.com
>Questionable web page: http://www.dididahdahdidit.com
>Covert supporter of the Vast Right Wing Conspiracy (tm)

784. Trackers

From: deunju@juno.com (DALE E URBAN)
Date: Tue, 28 Jul 1998 17:41:02 CDT
To: aprssig@tapr.org
Message-ID: <19980728.174209.3350.7.DEUNJU@juno.com>
Rendered body type: text/plain

The Kansas Highway Patrol is starting to install gps trackers in thier
units and are experiencing the same attitudes from its Troopers. They
think that a supv will watch what they are doing and use it against them.
The main reason for the GPS is that the
KHP is converting to a central dispatch and the GPS will help the
dispatcher who in in central Kansas know where thier units are in western
Kansas. Its a good tool if you can convince the users that its not BIB
BROTHER WATCHING! I guess if your not doing something your not supposed
to be you shouldnt have a worry. I know that they are screwing with the
GPS units by putting tin foil on the GPS antennas and such. I think the
data streams are encrypted so that someone outside the agency cannot
monitor thier movements. It could save thier life someday!!!!!!
Dale Urban N0KQX
Garden City Ks.

_____
You don't need to buy Internet access to use free Internet e-mail.
Get completely free e-mail from Juno at http://www.juno.com
Or call Juno at (800) 654-JUNO [654-5866]

785. Hi

From: aa8ei@eos.net
Date: Tue, 28 Jul 1998 19:05:55 -0400
To: Doug Wetzel <dwetzel@earthlink.net>
Cc: aprssig@tapr.org
Message-ID: <l03130302b1e3ffd186c2@205.133.149.205>
Rendered body type: text/plain

Doug, congratulations on your MS150. We've yet to do MS150 APRS here in
Cincinnati, but have been doing comm for MS for a dozen years or more (it seems
longer!).

** are for the APRS thinkers out there.

I tried to follow your event but saw the really wild tracks and eventually gave
up! Part of my problem was not having a good map of your area (I'm not able to
use PM or SA).

How did you handle the "rep(etition) rate" problem? That is, the transmit
timing for the trackers. One thought we will work on here is an "on demand"
position transmission. The original scenario is marking the flood extent by
driving up to the water's edge, hitting transmit a couple times, and moving on.
The connecting track would then show the approximate extent of the flooding.

The other end of the that problem is the accuracy of the track with respect to
the actual road, where often paints a more accurate picture.

** I would like to suggest a use of the "speed" calculation to set the rep rate. The faster the vehicle is moving, the faster the rep rate.

I did change the color of the tracks for each SAG vehicle. This would have been useful if not for the really wild ones going every whichaway.

** We could use some more colors for events with many trackers.

Suggest you have everyone in a category (probably "SAG") use the numbers instead of the same 'car' icon to be able to discriminate at a map scale where icons overlap.

** We probably need more icons for multi-vehicle events as this usage becomes more 'usual' and the numbers (perhaps sets with the same color background and with numbers greater than one digit) make less clutter than the tactical calls.

I have faith we will solve the interference problem between trackers and event communications. We will have little choice here if we can do APRS next year. VHF is our only choice for overall links.

** I suppose we need to experiment with multiple VHF installations looking for antenna types, locations or installation methods to minimize the impact, with particular emphasis on installations in 'other' vehicles. The local MS group gets vehicles from a sponsor, so SAG and committee vehicles are not those of hams. And then there are the "mechanics" vehicles, which we got radio'd for the first time this year, and it made a big difference, as you know.

** The "Power" problem also needs to be addressed. This will no doubt restart the "official" connector thread.

I have used a cable that connects to the vehicle battery and can power all the comm gear without need for vehicle "plugs" also making the radio installation more correct. It's ugly, of course, and is one more cable to be brought in a window.

I have used a gel-cell to power all the radio gear. That appears to be the best route, avoiding the vehicle electrics completely as well as the cable taped to the vehicle body, and open window.

This year, I succumbed to political correctness and used neither and had similar problems as you did. Next year, it's batteries or cable.

** It may be useful to consider RF chokes "a.k.a. current balun" to keep RF where it belongs.

We will learn much from the MS150's as well as doing a good thing. Thanks for your work and sitrep. Good luck next year. I hope to work the St. Louis event to learn from their experiences. If there are other MS150's (or any events using APRS) a couple hundred miles or so from Cincinnati, I'd like to know of them. One of these days I'll remember to contact MS and get the locations of all the events. They make great ham weekends.

73, Tony

786. Re: [APRSSIG:26610] Com-Over Flow

From: Byron Smith <wa6ylb@theworks.com>
Date: Tue, 28 Jul 1998 16:34:09
To: kd4ydc@bellsouth.net
Cc: bruninga@nadn.navy.mil, aprssig@tapr.org
Message-ID: <3.0.1.16.19980728163409.297f0e6a@theworks.com>
Rendered body type: text/plain

Bob B - this is exactly what I have complained about. The garmin units place so many gps strings out to the pc on the HSP side of things, that it causes aprs
to "Choke" on them, and stay "lost" for 30 seconds or more. It eventually gets a posit, but its very non responcive. I am running a 386sx20 and it does this same thing. Finally had to give up using hsp, and found a second serial port for this 386sx20 laptop. The 486dx75 laptop didnt choke as much, but you could tell it was having a bit of trouble too.
If you go to O C T mode, and toggle HSP to view the data from the GPS, every thing looks good. Its not the HSP cable doing it. If it were, then you'd wouldnt see data from the GPS

---This I'm sure isnt a problem for GPS units that are "programmable" to output a single GPS string, once a second. Typical Garmins output 12 lines twice a second.

At 08:58 AM 7/28/98 -0500, you wrote:
>Just got a GPS45 and a KPC3 (5.1) and am running this with a 8088
>laptop.
>(Not tracker mode). Made up a hsp cable from:
>http://Othello.localaccess.com/nwaprs/hsp.htm
>I keep having problems with I/O glitches and Com-Over Flows to the
>point that it locks up. I also see the NMEA sentences from the GPS
>along the bottom constantly (cannot gain control of the keyboard
>sometimes). Am desperately trying to get this worked out for our
>trip to Disney World this Sunday. Any ideas?? Running
>KD4YDC-9 if you want to see.
>HELP!!!!!
>Robert
>KD4YDC
>
>
>
Byron Smith
wa6ylb@theworks.com - Website: theworks.com/~wa6ylb
wa6ylb@wa6ylb.#cca.ca.usa.noam

If a turtle doesn't have a shell, is he homeless or naked?

787. Re: [APRSSIG:26607] Re: Neighborhood Night Out

From: "Kevin Heyboer" <kd4uyr@gte.net>
Date: Tue, 28 Jul 1998 19:57:47 -0400
To: <ptoth1@tampabay.rr.com>, <aprssig@tapr.org>
Message-ID: <000501bdba83$88198d60$cdf3ffd0@kh>
Rendered body type: text/plain

Equiping police and fire vehicles with GPS location systems does make a
great deal of sense in terms of resource utilization. However, the problem
I see, from a law enforcement perspective, is two-fold.

Such a program will only be successful if the supervisory personnel are
willing to bend a little when it comes to watching the fleet. Its a known
fact that you have to stop and rest when driving around for eight
hours....you also have to stop to write reports....and yes, to chat with
your buddies.....some of which may be business related and some of which
might be non-work related....its called morale....and its importance cannot
be breached.

#2 The radio signal used must be encrypted in some form, or at least not
decodeable by simple means available to the public. Regretably there is a
small percentage of people in this world who would take great advantage if
they could pinpoint the location of every police car in the
fleet....criminal elements, of course, but also the media.

#3. Such operations should only be used for on-duty patrol personnel....off
duty and undercover vehicles should not be tracked....off duty vehicles
because the load on the system would be tremendous....and undercover
vehicles cause sometimes they are following police cars.

Kevin Heyboer KD4UYR
Pinellas County Florida SKYWARN Coordinator

788. Re: [APRSSIG:26628] Trackers

From: "Kevin Heyboer" <kd4uyr@gte.net>
Date: Tue, 28 Jul 1998 20:10:37 -0400
To: <deunju@juno.com>, <aprssig@tapr.org>
Message-ID: <003901bdba85$521b9d00$cdf3ffd0@kh>
Rendered body type: text/plain

Exactly my point Dale....the problem is the distrust of the supervisors
inaccurate assumptions that might be made if a vehicle sits still for any
period of time....an officer might be doing dozens of legitimate things
while sitting still....such as writing reports, watching for speeders,
staking out an all night convenience store from the dark corner across the
street.....and he/she does not want to have to explain themselves everytime
they stop moving....

789. APRS tracker in police car demo

From: "Mark D. Conner" <mconner@null.net>
Date: Tue, 28 Jul 1998 19:20:58 -0500
To: aprssig@tapr.org, aprsplus@k8sn.org
Message-ID: <3.0.5.32.19980728192058.00846100@mail.neonramp.com>
Rendered body type: text/plain

Some follow-up information:

1) We expected many (if not most) of the police officers would be reluctant to implement a tracking system in their vehicles. However, they would still like to see how it works for nothing other than the "gee-whiz" factor. In other words, the typical reaction will probably be "Cool. But not in my car."

2) The radios are 800 MHz with some 460 MHz for interagency stuff (Omaha is still 460).

3) Many systems on 800 MHz are going with an encryption capability. Even without that, an obscure format plus the normal frequency rotation with trunking would make it hard for all but the most serious "hobbyists" to track the cars.

Routinely tracking and reporting one's own position might be hard for some to take. Maybe the system could be limited to a "polling" routine, where dispatch would only query the trackers when everyone's position is needed in order to determine the closest unit to an incident. Updates could also be done on a non-polled basis when the light bar is on for later use.

Someone mentioned SA tends to warp the speed like it does the position. I don't think SA varies fast enough to do that significantly. While the absolute positions are off, *relative* distances from posits taken over a short delta-t should be computed accurately enough. My experience has been that the speed is within 1-2 mph, verified by setting the cruise control and timing over a mile on flat freeway.

73 de Mark N9XTN

Mark D. Conner
Internet: mconner@null.net Packet: N9XTN@WA0ZQG.IA.USA.NA
Homepage: http://www.neonramp.com/~mconner
"Arrogance and stupidity, all in the same package.....how efficient of you!" - Ambassador Londo Mollari, Babylon 5

790. Re: [APRSSIG:26616] Re: Com-Over Flow

From: Byron Smith <wa6ylb@theworks.com>
Date: Tue, 28 Jul 1998 17:33:06
To: bruninga@nadn.navy.mil
Cc: aprssig@tapr.org
Message-ID: <3.0.1.16.19980728173306.297fc03c@theworks.com>
Rendered body type: text/plain

Comments below.

>> Just got a GPS45 and a KPC3 (5.1) and am running this with a 8088
>> I keep having problems with I/O glitches and Com-Over Flows to the
>> point that it locks up....
>
>New GPS's dump so much data that it may overload an 8088. My suggestion
>for a QUICK fix, is to replace the HSP with a push button switch. It
>passes RXD from the TNC to the PC normally. WHen button is pushed, it
>passes GPS data. THus, as you drive, whenever you want a fix, you press
>and hold the button for a second or so.
>

Isnt there a way to fix this in APRS? My 386sx20 does this same thing too. I tried a 486dx75laptop and it still does this, but recovers a bit faster. Not as bad as the 386sx20 though.

I believe the problem is within the way aprs looks for lines. I dont know how you have it set up - weither your looking character by character, line by line etc.

My though for a *fix* was, when APRS "first" fires up, have APRS start a timer. Allow it to
look at the serial port (with HSP on) for say 2 seconds. (maybe this happens at the time of HSP enable in ALT S G H command. Do this each time aprs fires up and enables HSP- such as when HSP is enabled and you save your configuration - hsp is back on when you fire up aprs again.)Do line inputs to get all data plus its CR. use multi buffers (array) to store this. try a value for the array like 12 to 15, since thats a known number of lines of current GPS units. (You can leave the array this large and only use a couple of lines of

it, or kill it off, and redimension it to "fit" the findings - your choice.)

Then count the number of CR's (lines)found in a two second period. This
assumes the GPS is on when this test is preformed. If APRS doesnt detect
any GPS data, such as what would be seen if the serial cable is
disconnected, or GPS is turned off, it should then warn the operator that
GPS DATA wasnt found, and then "wait" for the operator to "hit any key" to
acknowledge this problem. If data was found, then by counting
the number of CR's(lines) found in this time period can be used to
redimension this array to capture the data from a GPS.(redimension if space
is a premimum)

This method has a advantage. If your GPS outputs one or two lines a second,
then
APRS then knows to look for one/two lines, then parse the data. If the
number is
higher, then it can look for a bunch of lines, then start parsing after
collecting them.
In this fashion, aprs will be doing line inputs, without losing data trying to
parse the data between lines one at a time, missing characters in the next
line(s). Let Aprs gather the data first.
If this same timing routine determines that it only saw 1,2 crs in 1 to 2
seconds, then APRS will only collect this 1 or 2 lines of GPS data, turn
off HSP, and parse the gps data lines. If the routine didnt find
any valid gps strings, then the bad NMEA message would still apply.(such as
a gps that hasnt gotten LOCK yet)

The current way of parsing a line in real time as received, will need such
horse power that anything less than 486dx100 or pentimum wont get it.

>It may NOT solve all the problems, and it is a kludge, but it will get you
>on the road in a short time. This way, your finger has control of
>overflows...

The push button would have to be normally closed, and "OPEN" the data stream
to help APRS get out of HSP toggle mode.

--? I suspect this would be about as wonderful as keying a MIC-e all the
time to send a posit. Also, when APRS wants this GPS data, it waits for a
while to get it. This wait seems like forever, as I have accidently had
the serial cable fall off from the GPS to the laptop and APRS waited and
waited till I plugged the serial cord from the GPS in again. Same thing
applys to a WX stn. Remove the data from
the WX stn, and see how long aprs waits for data. You'll be suprised to
see aprs not do anything till it gets it (two serial ports - configuration,
that is)

Byron Smith
wa6ylb@theworks.com - Website: theworks.com/~wa6ylb
wa6ylb@wa6ylb.#cca.ca.usa.noam

If a turtle doesn't have a shell, is he homeless or naked?

791. test

From: "Jimmy Burkhalter" <kb5wio@tcac.net>
Date: Tue, 28 Jul 1998 19:36:59 -0500
To: <aprssig@tapr.org>
Message-ID: <000801bdba88$ff23d960$3c2c32cf@jimmy.tcac.net>
Rendered body type: text/plain

test

Jimmy Burkhalter   KB5WIO
Amarillo, Texas

kb5wio@tcac.net

35:9:6 N 101:52:32 W

792. Re: [APRSSIG:26617] Re: APRS demo with "Neighborhood Night Out"

From: Byron Smith <wa6ylb@theworks.com>
Date: Tue, 28 Jul 1998 17:36:01
To: n3eop@hotmail.com
Cc: aprssig@tapr.org
Message-ID: <3.0.1.16.19980728173601.36478c7e@theworks.com>
Rendered body type: text/plain

>However, routine tracking of police vehicles may not be a particularly
>good idea. Imagine the implications if someone sets up a portable
>receiver (laptop, etc.) in their car, sits in the parking lot until all
>of the patrol cars are several miles away, then goes and robs the bank.

ah, this cant happen. The data the car sends out over the air is encrypted.
You cant decode it like our APRS system is now. This is part of the
security system that is built into mobile data terminals in police Data
terminals. (were installing a system here now.)

Byron Smith
wa6ylb@theworks.com - Website: theworks.com/~wa6ylb
wa6ylb@wa6ylb.#cca.ca.usa.noam

If a turtle doesn't have a shell, is he homeless or naked?

793. Re: [APRSSIG:26629] Hi

From: Byron Smith <wa6ylb@theworks.com>
Date: Tue, 28 Jul 1998 17:45:32
To: aa8ei@eos.net
Cc: aprssig@tapr.org
Message-ID: <3.0.1.16.19980728174532.297f6e9e@theworks.com>
Rendered body type: text/plain

See the GPSXYZ settings in the readme text files(about trackers). the Z is
a number that can be
overlayed on the XY icon. ALso, there are pre numbered ICONs too.
If you set up the stand along trackers to GPSxyz via blah, blah instead of
APRS via blah, blah, then your units could have been customized.
(with a number that is.)

>** We probably need more icons for multi-vehicle events as this usage becomes
>more 'usual' and the numbers (perhaps sets with the same color background and
>with numbers greater than one digit) make less clutter than the tactical
calls.
>
Byron Smith
wa6ylb@theworks.com - Website: theworks.com/~wa6ylb
wa6ylb@wa6ylb.#cca.ca.usa.noam

If a turtle doesn't have a shell, is he homeless or naked?

794. Re: SA 5.0 vs. Precision Mapping 3.0?

From: "Paul Christenson" <n3eop@hotmail.com>
Date: Tue, 28 Jul 1998 17:50:49 PDT
To: aprssig@tapr.org
Message-ID: <19980729005049.16815.qmail@hotmail.com>
Rendered body type: text/plain

>Hello! I am a relative newbie, and was wondering if the prevailing
>opinion swayed one way or the other regarding Street Atlas 5.0 or
>Precision Mapping 3.0, and APRS operation?

Street Atlas 5 is not exactly a cheap program. PM can be had for a lot
less, though I've seen SA4 heavily discounted.

The biggest thing is whether you want to use WinAPRS or APRS+.

If undecided (I know, you can't evaluate APRS+ without SA), you may want
to consider the Tripmate/SA combo, a fine combo in its own right.

I've been happy with SA4 for non-ham uses for over a year. I've been
thinking about getting PM to play with (it's cheap enough).

_____
Get Your Private, Free Email at http://www.hotmail.com

795. Re: [APRSSIG:26628] Trackers

From: n8exf@juno.com (R L BOEHM)
Date: Tue, 28 Jul 1998 20:51:05 -0400
To: deunju@juno.com

Cc: aprssig@tapr.org
Message-ID: <19980728.210423.12526.0.N8EXF@juno.com>
Rendered body type: text/plain

>The Kansas Highway Patrol is starting to install gps trackers in thier
>units and are experiencing the same attitudes from its Troopers. They
>think that a supv will watch what they are doing and use it against
>them.
SNIP

Makes ya wonder what the troopers are up to if they want to remain hidden
from the sgt.

73 de Bob, N8EXF // KN
homepage http://www.qsl.net/n8exf

Igloos are polar bear snacks, crunchy on the outside, warm and chewy on
the inside.

796. Re: [APRSSIG:26623] Re: APRS demo with "Neighborhood Night Out"

From: Jeff Brenton <jeffb@espi.com>
Date: Tue, 28 Jul 1998 21:27:59 -0500
To: rwf@bsrg.org
Cc: aprssig <aprssig@tapr.org>
Message-ID: <35BE88AF.21D@espi.com>
Rendered body type: text/plain

You misunderstand, Ralph; when sitting under the tower at the EOC, my
car radios are desensed during tracker transmit to the point where I
can not copy the EOC transmitters (155.025 MHz, 80 watts at 180').

Within the EOC itself, our biggest problem is interference between ham
equipment. Because of damaged antennas on the tower (no budget to
replace immediately), 2/3rds of our ham gear uses roof-mounted antennas,
with no vertical separation, and a jammer has made it necessary to run
full power on the voice radio to reach the repeater.

This means the voice radio (144.73 TX) desenses the WX teletype receiver
(147.06), with the antennas only 10 meters apart... and that receiver
has a helical resonator on the front end to try to stop that.

We're hoping that, after we get the EOC rebuilt (long story, lightning
damage, bids out for months, etc), we can get enough WORKING ham
antennas on the tower to get back to having lots of vertical separation,
to get back to the unmeasurable desense we used to have.

Remember; this site used to house a 144.73/145.33 voice repeater AND the
45-watt digi on 144.39, without interference, including to/from the GE
and Motorola equipment. No filters on the digi or voice radios, just
vertical separation of the antennas.

The voice repeater has since moved to a commercial site, where the
"decent radios rather than the wide open junk that most Hams buy"
commercial equipment is causing so much intermod that the repeater has
become far less useful than when it was at the EOC... [there isn't any
non-commercial gear at this site, including the ham repeaters on 6m, 2m
and 70cm, with 220 coming "real soon now"]

But the crux of my caution was and is interference within the mobile
with the tracker.

As for fixed sites, yes, there can and often are problems. Certain
commercial site management companies (particularly one that has a large
"M" in their logo) are famous for poorly-managed sites, with little
regard for mix products. You can spend a lot of money making up for
their choices in renters, often to have the finger pointed at YOUR
station as the interference, simply because you're the one not paying
the premium rate for tower space.

Filters, tight-spec radios, circulators, etc., are all part of the
shared-tower environment, no matter WHAT you're putting up!

--

Jeff Brenton, Ham Radio call KA9VNV
Questionable web page: http://www.dididahdahdidit.com
Covert supporter of the Vast Right Wing Conspiracy (tm)

Ralph Fowler wrote:

>
> Jeff B. - we have not found this to be the case. Most VHF Public
> service is on at least 152 MHz or higher and not nearly as prone to
> desense because they use decent radios rather than the wide open junk
> that most Hams buy.
>
> But... you HAVE again illustrated the case for the extreme necessity
> of proper filtration on any 144.39 device being operated near a 145.xx
> repeater. 120 KHz from the input isn't far- even with filtration and
> decent receivers!
>
> On your EOC, with the 4' spacing on antennas... what is the receive
> freq that is being desensed by your tracker and what kind of radio?
> I am curios and this may make a good illustration of the hidden
> desense problem.

797. Re: [APRSSIG:26571] Re: APRSSIG digest 1628

From: Jeff Brenton <jeffb@espi.com>
Date: Tue, 28 Jul 1998 22:14:59 -0500
To: "Douglas P. Dotson" <ddotson@clark.net>
Cc: aprssig <aprssig@tapr.org>
Message-ID: <35BE93B3.3ACB@espi.com>
Rendered body type: text/plain

Douglas P. Dotson wrote:
> Man, you are an asshole. I remember when hams were a close knit
> friendly bunch. I'll be glad to get out of this braindead group.

You are entitled to your opinion, with which I respectfully disagree,
which I am also entitled to do.

The point is, someone set up an autoresponder that had the potential to
flood the SIG with dead messages, thanking the SIG for sending it
something. Last year, someone did this when they left for a trip to
Germany... and they WERE NOT in digest mode, and their autoresponder
messages went through the SIG to their mail box, and were autoresponded
to, which ... You can see the problem, I hope.

Edgardo is the first person that I have seen use an autoresponder for
everyday mail; he has fixed this, and apologized for it. I'm happy with
the result, the problem is averted. In every other case I've witnessed
in several YEARS of reading APRSSIG, the ONLY way to stop the problem
was to delete the offending user, and wait for them to get home and ask,
"why aren't I still a member?"

Let me take this opportunity to put out a helpful hint: If you're going
to be away from your computer (or if you simply will be "glad to get out
of this braindead group"), be sure to send a message to:

   listserv@tapr.org

and include the following text in the body (subject doesn't matter):

   signoff aprssig

Do this for any other mail lists you subscribe to; the "braindead"
people who remain will appreciate it greatly!
--

Jeff Brenton, Ham Radio call KA9VNV
Questionable web page: http://www.dididahdahdidit.com
Covert supporter of the Vast Right Wing Conspiracy (tm)

798. Re: [APRSSIG:26619] MS 150 Wrap Up

From: Ralph Fowler <rwf@BSRG.org>
Date: Tue, 28 Jul 1998 17:22:07 -0400
To: aprssig@tapr.org
Message-ID: <Version.32.19980728171933.010b0cd0@ccegate.cokecce.com>
Rendered body type: text/plain

Don't feel bad. So do the GPS35s as well (they are 12 ch parallel). Many
people have noticed my car (N4NEQ-9) off the coast of Africa or near Alaska
for days on end.

dwetzel wrote:
At one time or another, ALL of the GPS30 based

>trackers gave us false positions...in fact we had one, before we reset it,
>insist that the sag unit was sailing up the Straight of Juan de Fuca at
>about 250kts, headed for the Aleutians and eventually Japan. If the route
>were totally wooded, this would have been a major problem, but there was
>enough clear area that they eventually found themselves again.

799. Re: Com-Over Flow

From: wo4u@juno.com
Date: Tue, 28 Jul 1998 23:03:56 -0400
To: wa6ylb@theworks.com, aprssig@tapr.org
Message-ID: <19980728.232341.4646.1.wo4u@juno.com>
Rendered body type: text/plain

Byron Smith Wrote:
"Bob B - this is exactly what I have complained about. The garmin units
place so many gps strings out to the pc on the HSP side of things, that
it
causes aprs
to "Choke" on them, and stay "lost" for 30 seconds or more. It eventually
gets
a posit, but its very non responcive."

++

I have had the same trouble since switching to the Garmin GPS III. I
used to put out a nice smooth track - now it is hit and miss. Most of
the time when I look up in the top right corner of the screen I see I/O
Glitch reather that GOOD RMC data. If I had known that the GARMIN did
not have selective sentences I would NOT have purchased it. I have
convinced numerous others NOT to buy GARMIN because of this. The GARMIN
engineers have told me they do not plan to change it so that specific
sentences can be selected. I guess with the quantity that they sell, it
is not worth making changes for a few APRS-DOS users.

Paul - WO4U

_____
You don't need to buy Internet access to use free Internet e-mail.
Get completely free e-mail from Juno at http://www.juno.com
Or call Juno at (800) 654-JUNO [654-5866]

800. Re: [APRSSIG:26643] Re: Com-Over Flow

From: Earl Needham <kd5xb@amsat.org>
Date: Tue, 28 Jul 1998 21:44:01 -0600
To: aprssig@tapr.org
Message-ID: <3.0.3.32.19980728214401.00910780@mail.pdrpip.com>
Rendered body type: text/plain

At 10:27 PM 7/28/98 -0500, wo4u@juno.com sent:
<snip>
>I have had the same trouble since switching to the Garmin GPS III. I
>used to put out a nice smooth track - now it is hit and miss. Most of
>the time when I look up in the top right corner of the screen I see I/O
>Glitch reather that GOOD RMC data. If I had known that the GARMIN did
>not have selective sentences I would NOT have purchased it. I have
>convinced numerous others NOT to buy GARMIN because of this.

        What do you suggest instead?

        7 3
        Earl

Earl Needham, KD5XB   mailto:KD5XB@AMSAT.ORG
Clovis, New Mexico   DM84 N34.403 W103.334

801. Re: solar power

From: Dave.Ackrill@NOTESMAIL.powergen.co.uk
Date: 29 Jul 1998 08:55:19 +0000
To: aprssig@tapr.org
Message-ID: <980729085519Z*/G=Dave/S=Ackrill/O=NOTESMAIL/PRMD=POWERGEN/ADMD=CWMAIL/C=GB/@MHS>
Rendered body type: text/plain

---------------------- Forwarded by Dave Ackrill/Westwood/PowerGen on
29/07/98 09:30 ---------------------------

Dave Ackrill

28/07/98 09:58

To: internet aprssig @ tapr.org at multimessage @ lotusxchg
cc:
Subject: Re: solar power

Don't know about other countries, but over here night rate tariffs are common. You get a meter with two registers, or dials, and a timer with contacts to change from one to the other at the right time.

In industry and commerce, many supplies are metered in half hourly 'blocks', the data stored in memory and downloaded to the Supplier every night (well, it's a bit more complicated than that, but I didn't want to send you all to sleep HI!). So the tariff splits are up to the Supplier and they can split the time periods any way they like. So you can have different rates for weekends, days, nights, even charge differently for each half hour if you like! (Some tariffs do that as well......)

What's this to do with APRS? I'm not sure, but I guess if we tried hard we could link any subject to APRS - Like that Holliwood game where they link any one to a particular actor in 4 moves.

Cheers de Dave (G0DJA)

802. Re: [APRSSIG:26610] Com-Over Flow

From: John W Wilson <z004391b@bc.seflin.org>
Date: Wed, 29 Jul 1998 07:50:50 -0400 (EDT)
To: Robert Burton <kd4ydc@bellsouth.net>
Cc: aprssig@tapr.org
Message-ID: <Pine.3.89.9807290741.A4855-0100000@bc.seflin.org>
Rendered body type: text/plain

Sounds like you may have the GPS connected directly to the computer instead of via the HSP mechanism. I run mine with a switch which divirts the GPS data to the computer while depress the pushbutton, and the TNC is connected when I release the button. The pushbutton is momentary type. That way the GPS data is sent only when I push the button.

John W. Wilson, KN4HX
z004391b@bcfreenet.seflin.lib.fl.us

On Tue, 28 Jul 1998, Robert Burton wrote:

> Just got a GPS45 and a KPC3 (5.1) and am running this with a 8088
> laptop.
> (Not tracker mode). Made up a hsp cable from:
> http://Othello.localaccess.com/nwaprs/hsp.htm
> I keep having problems with I/O glitches and Com-Over Flows to the
> point that it locks up. I also see the NMEA sentences from the GPS
> along the bottom constantly (cannot gain control of the keyboard
> sometimes). Am desperately trying to get this worked out for our
> trip to Disney World this Sunday. Any ideas?? Running
> KD4YDC-9 if you want to see.
> HELP!!!!!
> Robert
> KD4YDC
>
>

803. Re: [APRSSIG:26625] SA 5.0 vs. Precision Mapping 3.0?

From: John W Wilson <z004391b@bc.seflin.org>
Date: Wed, 29 Jul 1998 08:15:28 -0400 (EDT)
To: Paul Knight <paul.knight@prairiecomm.com>
Cc: aprssig@tapr.org
Message-ID: <Pine.3.89.9807290850.C4855-0100000@bc.seflin.org>
Rendered body type: text/plain

The SA5 version allows full Street Atlas operation because the program must be run while the APRS software is run. You toggle back and forth if you like. The APRS SA software appears to write files to the disk which are directed to the SA5 map software.

The WinAPRS version uses the PM3 map as a another map only, and there are no PM3 controls available to you. The map appears as a choice of the standard WinAPRS map scheme, but the detail is of PM3 quality.

I don't know which requires more memory, if that is a concern. I know
that Street Atlas takes a lot of memory and I couldn't run the SA5
software along with the APRS SA software at the same time on just 8 megs (I
know, 8 megs is too little to be running Win95 anyway). I didn't try
this test with WinAPRS.

Both maps provide excellent resolution and seem to be similar in accuracy.

John W. Wilson, KN4HX
z004391b@bcfreenet.seflin.lib.fl.us

On Tue, 28 Jul 1998, Paul Knight wrote:

> Hello! I am a relative newbie, and was wondering if the prevailing
> opinion swayed one way or the other regarding Street Atlas 5.0 or
> Precision Mapping 3.0, and APRS operation?
>
> Thanks and 73,
>
> Paul WD8DKY
> paul.knight@prairiecomm.com
>
>

804. Re: [APRSSIG:26647] Re: SA 5.0 vs. Precision Mapping 3.0?

From: "hasan schiers" <schiers@netins.net>
Date: Wed, 29 Jul 1998 08:09:24 -0500
To: <z004391b@bc.seflin.org>, <aprssig@tapr.org>
Message-ID: <005701bdbaf2$1cc0eee0$ac178ea7@schiers.netins.net>
Rendered body type: text/plain

-----Original Message-----
From: John W Wilson <z004391b@bc.seflin.org>
To: aprssig@tapr.org <aprssig@tapr.org>
Date: Wednesday, July 29, 1998 7:23 AM
Subject: [APRSSIG:26647] Re: SA 5.0 vs. Precision Mapping 3.0?

>The SA5 version allows full Street Atlas operation because the program
>must be run while the APRS software is run. You toggle back and forth if
>you like. The APRS SA software appears to write files to the disk which
>are directed to the SA5 map software.
>
>The WinAPRS version uses the PM3 map as a another map only, and there are
>no PM3 controls available to you

This is not quite technically correct. While PM3 controls from within PM3
are not available, several of the controls that are in PM3 are ported into
the window of WinAPRS, for example you can search by place, zip etc. (I
think those are the ones, I'm not at home now to see). Further, Mark S. has
indicated that he is going to bring in the other controls from PM3, so that
inside WinAPRS we will pretty much have full control of PM3 without PM3
installed, and only the .ocx file in place. The CDROM only needs to be in
the drive and all functions should be available when Mark gets this part
finished.

So...some of the functionality is already there, with more to come.

73,

hasan, N0AN
schiers@netins.net

805. Re: [APRSSIG:26625] SA 5.0 vs. Precision Mapping 3.0?

From: Mark Sproul <msproul@ap.org>
Date: Wed, 29 Jul 1998 09:52:45 -0400
To: paul.knight@prairiecomm.com, aprssig@tapr.org
Message-ID: <v03110704b1e4d8323178@[165.1.27.20]>
Rendered body type: text/plain

At 5:40 PM -0400 7/28/98, Paul Knight wrote:
>Hello! I am a relative newbie, and was wondering if the prevailing
>opinion swayed one way or the other regarding Street Atlas 5.0 or
>Precision Mapping 3.0, and APRS operation?
>
>Thanks and 73,
>

>Paul WD8DKY
>paul.knight@prairiecomm.com

With WinAPRS, Precission Mapping is FULLY integrated into the program. You never have to switch back and forth and EVERYTHING is drawn directly onto the map. You can have PM maps and regular APRS maps open at the same time. You can have MULTIPLE PM map windows open also, the PM program itself only allows one Map window open. (The last time I used Street Atlas, it also limited you to one map but that might have changed).

The important controls, specifically the FIND dialogs are ported over, as are the options to turn map features on and off. As Hasan said, I will be adding more of this.

Within WinAPRS, the PM maps behave and interact the exact SAME as non-PM maps. By this I mean the way you zoom in and out and the way you move around the maps.

With my next release, auto-scrolling of the maps is fully implemented. You can have a map auto scroll on YOUR postition or on the position of ANY other moving station. You can have one map window auto scrolling on one vehichle, and a second map window auto scrolling on another vehchile and a 3rd etc.

WinAPRS has had support for Digitial Elevation Model data (DEM files) from the USGS for quite some time. Support for TOPO brand maps will be out in a few more months.

Mark

Mark Sproul |
Software Engineer @ Assoc Press |Work: 609-860-7120
msproul@ap.org |Fax: 609-860-7129

806. Kantronics TNC & Program help needed

From: "John Palese" <c4wi@execpc.com>
Date: Wed, 29 Jul 1998 09:00:11 -0500
To: APRSSIG@tapr.org
Message-ID: <199807291402.JAA00733@mailgw00.execpc.com>
Rendered body type: text/plain

Hi:

I have a KPC3+ and KAM+.

I am experimenting with demo versions of both APRS+ and WIN APRS.

So far I have not been able to get either program to "hear" the TNCs.

The TNCs are in the terminal mode and I have issued the commands required of Kantronics TNCs per the WIn APRS instructions.

I also have not been able to get APRS+ to see or use the Street Atlas program.

HELP!

73
DE WB9JPH

J.A. Palese

807. QQSERV

From: "Knut Finnevolden" <knutf@idt.net>
Date: Wed, 29 Jul 1998 10:25:19 -0400
To: <aprssig@tapr.org>
Message-ID: <011001bdbafc$b86fc6e0$3c4684a9@knut>
Rendered body type: text/plain

I know that QQSERV is no longer compatible with aprsnet.
This was, however, a great SMALL program that could serve the Net without being a memory hog.

Can someone please write a SMALL program equivalent to qqserv that can
monitor the TNC and upload to the Net for the days you do not need all the
features of WinAPRS or APRSsa.

N1QKP,
Knut Finnevolden
mailto:knut@cookiearrangements.com
Webmaster for:
Hartford Marathon Communications
http://www.cookiearrangements.com/AmateurRadio/hm.html
Knut's Amateur Radio Pages
http://www.cookiearrangments.com/AmateurRadio
Amateur Callsigns N1QKP & LC3TAT

---

808. Re: [APRSSIG:26649] Re: SA 5.0 vs. Precision Mapping 3.0?

From: "Brent Hildebrand" <bhildebrand@earthlink.net>
Date: Wed, 29 Jul 1998 07:31:15 -0700
To: <aprssig@tapr.org>
Message-ID: <016a01bdbafd$8bed0320$568bfea9@dell>
Rendered body type: text/plain

At 5:40 PM -0400 7/28/98, Paul Knight wrote:
>Hello! I am a relative newbie, and was wondering if the prevailing
>opinion swayed one way or the other regarding Street Atlas 5.0 or
>Precision Mapping 3.0, and APRS operation?
>
>Thanks and 73,
>
>Paul WD8DKY
>paul.knight@prairiecomm.com

APRS+SA supports several instances of Street Atlas running. In v0.9.18 do
out in a few days, there will be 5 more map types available. Each can be
customized to have their own characteristics, including the ability to have
a fixed view (center lat/long and magnitude), and other map properties.
These maps can display all callsigns or just the station(s) you are
interested in viewing. One way to utilize this feature would be to
configure the maps to specific views. They can be local, or national. One
could be setup for a view of Seatle, another for Miami. Or, they can be
configured to various local cities. Or not localized, just different map
features. And they are all accessible from the keyboard very quickly. And
of course, APRS+SA can still and always has been able to track a moving
object(s) and stay on them like glue, to the street level.

BH, KH2Z

>
>With WinAPRS, Precission Mapping is FULLY integrated into the program. You
>never have to switch back and forth and EVERYTHING is drawn directly onto
>the map. You can have PM maps and regular APRS maps open at the same time.
>You can have MULTIPLE PM map windows open also, the PM program itself only
>allows one Map window open. (The last time I used Street Atlas, it also
>limited you to one map but that might have changed).
>
>The important controls, specifically the FIND dialogs are ported over, as
>are the options to turn map features on and off. As Hasan said, I will be
>adding more of this.
>
>Within WinAPRS, the PM maps behave and interact the exact SAME as non-PM
>maps. By this I mean the way you zoom in and out and the way you move
>around the maps.
>
>With my next release, auto-scrolling of the maps is fully implemented. You
>can have a map auto scroll on YOUR postition or on the position of ANY
>other moving station. You can have one map window auto scrolling on one
>vehichle, and a second map window auto scrolling on another vehchile and a
>3rd etc.
>
>WinAPRS has had support for Digitial Elevation Model data (DEM files) from
>the USGS for quite some time. Support for TOPO brand maps will be out in a
>few more months.
>

>
>Mark
>
>____
>Mark Sproul |
>Software Engineer @ Assoc Press |Work: 609-860-7120
>msproul@ap.org |Fax: 609-860-7129
>____
>
>
>

809. Re: [APRSSIG:26651] QQSERV

From: Steve Dimse K4HG <k4hg@tapr.org>
Date: Wed, 29 Jul 1998 11:17:44 -0400
To: <knutf@idt.net>, "aprssig" <aprssig@tapr.org>
Message-ID: <199807291517.KAA00389@tapr.org>
Rendered body type: text/plain

On 7/29/98 10:29 AM Knut Finnevolden (knutf@idt.net) wrote:

>Can someone please write a SMALL program equivalent to qqserv that can
>monitor the TNC and upload to the Net for the days you do not need all the
>features of WinAPRS or APRSsa.
>
The Sprouls and Brent are both working on such a program...

Steve K4HG

810. Re: [APRSSIG:26644] Re: Com-Over Flow

From: Ralph Fowler <rwf@BSRG.org>
Date: Wed, 29 Jul 1998 11:50:20 -0400
To: aprssig@tapr.org
Message-ID: <199807291603.MAA23724@cocacola-bh.cokecce.com>
Rendered body type: text/plain

I used the 45 with a 386 quite a bit and hardly ever had an overflow
problem. Never tried HSP with an 8088 however.

After switching to the Garmin 35 and also the Motorola Oncore (both with
programmable rates and sentences) I Didn't get any more errors at all on
the 386.

Later, with the Pico Packet doing the HSP function, I was isolated from any
further problems anyway.

Sounds like maybe the push button switch in conjunction with HSP (to OPEN)
the GPS data line in case of lockup might be a good solution.

Ralph

Earl wrote:

>   What do you suggest instead?

811. Re: [APRSSIG:26652] Re: SA 5.0 vs. Precision Mapping 3.0?

From: Bill Vodall <wa7nwp@bigsky.com>
Date: Wed, 29 Jul 1998 09:31:27 -0700 (PDT)
To: bhildebrand@earthlink.net
Cc: aprssig@tapr.org
Message-ID: <199807291631.JAA25336@eagle.bigsky.com>
Rendered body type: text/plain

>
> APRS+SA supports several instances of Street Atlas running. In v0.9.18 do
> ..
>
> BH, KH2Z

One feature of +SA that's not obvious is its handling of dual running
Street Atlas invocations..

All plotting will be in one of the two windows. Then, if the user
decides to zoom in or scroll or somehow interact with that window, the
+SA operations will switch to the other SA window.   This allows exploring
by the user without fighting for the display with the APRS+SA program.
Very handy..

Bill - WA7NWP

812. ALINCO DJ-s11 $88 HT Hack?

From: Bob Bruninga <bruninga@nadn.navy.mil>
Date: Wed, 29 Jul 1998 12:32:19 -0400 (EDT)
To: aprssig@tapr.org
Cc: amsat-bb@amsat.org
Message-ID: <Pine.SOL.3.96.980729122514.27837A-100000@arctic>
Rendered body type: text/plain

We bought 15 of the DJ-S11 HT's for use in a student satellite lab and
discovered two things.

1) It has a rcvr power saver which cycles the RCVR power off for 90% of
every second. Makes them useless for packet unless you run open sql

2) Looking at the schematic the CPU is connected to the MIC connector via
lines labeled TXD and RXD!

Anyone figured out how to talk to the CPU via these serial data lines?!!!
(It takes a stereo sub mini phone plug to access the TXD/RXD line I've
never seen one of these before in the sub-mini size.)

de WB4APR, Bob

813. Re: [APRSSIG:26655] Re: SA 5.0 vs. Precision Mapping 3.0?

From: Mark Sproul <msproul@ap.org>
Date: Wed, 29 Jul 1998 13:56:22 -0400
To: wa7nwp@bigsky.com, aprssig@tapr.org
Message-ID: <v0311070fb1e51223cf90@[165.1.27.20]>
Rendered body type: text/plain

At 12:36 PM -0400 7/29/98, Bill Vodall wrote:
>>
>> APRS+SA supports several instances of Street Atlas running. In v0.9.18 do
>> ..
>>
>> BH, KH2Z
>
>One feature of +SA that's not obvious is its handling of dual running
>Street Atlas invocations..
>
>All plotting will be in one of the two windows. Then, if the user
>decides to zoom in or scroll or somehow interact with that window, the
>+SA operations will switch to the other SA window.   This allows exploring
>by the user without fighting for the display with the APRS+SA program.
>Very handy..

WinAPRS with Prec Mapping allows multiple PM windows, you can treat each
window seperately and be looking at California with one, the entire US with
another and NJ with a 3rd. You can also track as many vehicles as you have
memory for. I have had up to 7 or 8 PM windows open at a time.

Each window is simply that another window, it is not another instance of
the program, just another window looking at a different part of the map.
Also each window can have different map features on or off.

Mark

____
Mark Sproul |
Software Engineer @ Assoc Press |Work: 609-860-7120
msproul@ap.org |Fax: 609-860-7129
____

814. Re: [APRSSIG:26570] GPS III Speed Limitation?

From: clark@tomcat.gsfc.nasa.gov (Tom Clark -- W3IWI)
Date: Wed, 29 Jul 98 17:53:11 UTC
To: aprssig@tapr.org, k4gps@bellsouth.net
Message-ID: <67737@tomcat.gsfc.nasa.gov>
Rendered body type: text/plain

K4GPS asked
> Is anyone aware of a speed limitation on the GPS III from Garmin ? I
> tried my new one today up to 95mph <grin> and it still worked well.
> This was on very desolate strech of road on a very long and boring
> trip. I would rather not test it out any further but am curious if I
> can use it on aircraft.

The GPS II+ and GPS III work fine in airplanes -- I have seen indicated speeds into the 600 MPH or 1000 km/hr range. When the stewardess asks, I call my GPS III a "navigation computer". It's neat with the III to have the built-in road map to identify what you are seeing on the ground below.

73, Tom

815. Re: [APRSSIG:26653] Re: QQSERV

From: "Brent Hildebrand" <bhildebrand@earthlink.net>
Date: Wed, 29 Jul 1998 13:10:14 -0700
To: <k4hg@tapr.org>, <aprssig@tapr.org>
Message-ID: <017301bdbb2c$e6b1a980$568bfea9@dell>
Rendered body type: text/plain

APRS+SA starting with v0.9.17 has the ability to not log any data except for Position data needed for IGate functions. This limits the amount of memory required to run the program and prevents any memory overflow that can occur with unlimited data collecting. You can limit the Position data to the last 10 minutes only or 8 hours, or what ever you desire. Map functions are disabled it Street Atlas is not running. This makes the program work better in a stand alone IGate mode.
..
BH, KH2Z

-----Original Message-----
From: Steve Dimse K4HG <k4hg@tapr.org>
To: aprssig@tapr.org <aprssig@tapr.org>
Date: Wednesday, July 29, 1998 8:24 AM
Subject: [APRSSIG:26653] Re: QQSERV

>On 7/29/98 10:29 AM Knut Finnevolden (knutf@idt.net) wrote:
>
>>Can someone please write a SMALL program equivalent to qqserv that can
>>monitor the TNC and upload to the Net for the days you do not need all the
>>features of WinAPRS or APRSsa.
>>
>The Sprouls and Brent are both working on such a program...
>
>Steve K4HG
>
>

816. LAG W7LUS-14 itinerary

From: Joe Loewy <jloewy@wncnet.net>
Date: Wed, 29 Jul 1998 16:44:11 -0400
To: "aprssig@tapr.org" <aprssig@tapr.org>
Message-ID: <35BF899B.17380609@wncnet.net>
Rendered body type: text/plain

Peter's revised itinerary:
Westford, MA -> Edison, NJ -> LI City, NY -> Norwood, MA -> LA

817. kpc-3+ Telemetry

From: Bob Bruninga <bruninga@nadn.navy.mil>
Date: Wed, 29 Jul 1998 17:21:46 -0400 (EDT)
To: aprssig@tapr.org
Message-ID: <Pine.SOL.3.96.980729163803.14859A-100000@arctic>
Rendered body type: text/plain

I put an internal 9v rechargable battery inside my KPC-3+ and wired voltage dividers and a charge circuit so that you could read the battery voltage and the charge current with the built in KPC-3 telemetry system.

I built this as a student-lab project, not sure if I would ever use it this way myself, because a 9v NICAD only lasts ONE FIFTH as long as a 9v Alkaline battery. And for me, NICADS are always dead when I need them. But in this case, the KPC-3+ is to have a small solar panel for student demos, and it is perfect. It should last about 6 Hours on a full charge.

I chose voltage dividers so that the raw telemetry values (between 0 and

255) actually are human readable as VOLTS in tenths and Current in tenths
of Milliamps. Thus 138 = 13.8 volts and 120 = 12ma. Here is the circuit

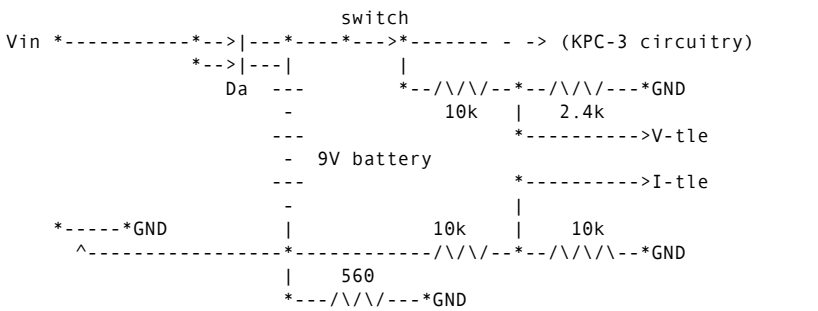

This is a "simplilfied diagram" but the idea is to add a diode "Da" so
that the battery can charge when an external supply is connected.
Notice that when the external power connector is inserted, it normally
disconnects the battery on the negative lead. You add the 560 ohm
resistor across these contacts so that the battery with Da can then charge
through the 560 ohm resistor at about 12 ma, (the C rating of a 9v Nicad).

Next you add the two voltage dividers. One to read the voltage at the
switch (so it doesnt drain the battery when the switch is off) and the
other one measures the voltage across the 560 ohm charging resistor.
Then run these two analog voltages to two of the analog input pins. I ran
these to unused internal analog pins AN2 and AN3 so that the external
analog inputs are still available for other sensors..

With no external supply plugged in, the voltage reads the battery. But
while charging, the voltage reads the charger input voltage. THus you
have to calculate the voltage across the Nicad during charging as the
difference between the Vin and voltage drop across the 560 resistor.

The LONGEST part of this project was finding pins 63 and 65 on the 68 pin
CPU chip! Looking at the bottom of the board, with the LEDS to the left
and the connectors to the right, here are the top row of CPU pins:

```
        59 61 63 65 67  1  3  5  7  9
     58 60 62 64 66 68  2  4  6  8 11 10
```

Pins 59 and 61 are the existing Analog inputs
Pins 63 and 65 are available analog inputs
Pins 67 and 1 are convenient grounds
Pins 9, 10 and 11 are NOT a typo. You count funny around the corners.
(I HOPE I got this right!   I DENY any responsibility!)

Again, this is a simplified diagram. There is another diode and some
chokes and caps between the power connector and the switch, but you get
the idea...

de WB4APR, Bob

818. Re: [APRSSIG:26570] GPS III Speed Limitation?

From: "Richard Garcia" <k4gps@bellsouth.net>
Date: Wed, 29 Jul 1998 17:49:19 +0000
To: aprssig@tapr.org, clark@tomcat.gsfc.nasa.gov
Message-ID: <199807292149.RAA24272@mail.mia.bellsouth.net>
Rendered body type: text/plain

> Date: Wed, 29 Jul 98 17:53:11 UTC
> From: clark@tomcat.gsfc.nasa.gov (Tom Clark -- W3IWI)
> Reply-to: clark@tomcat.gsfc.nasa.gov
> To: aprssig@tapr.org, k4gps@bellsouth.net
> Subject: Re: [APRSSIG:26570] GPS III Speed Limitation?

Great term Tom! Adding the computer part in there will probably avoid
any hassles. Not that it would cause problems but since it is not a
common electronic item I can see people saying "no" to it's use just
due to their unfamiliarity.

Like they say in the goverment, no one has ever been fired for saying
no. If in doubt just say no.

SNIP>
> When the stewardess asks, I call my GPS III a "navigation computer".
>

> 73, Tom
>
>
k4gps@bellsouth.net Ex: N2CZF KA2FXA
Jupiter Farms FL.
http://aprs.florida.net
http://www.radiotronics.com

819. New APRS digi

From: deunju@juno.com (DALE E URBAN)
Date: Wed, 29 Jul 1998 16:53:10 CDT
To: aprssig@tapr.org
Message-ID: <19980729.165621.12206.4.DEUNJU@juno.com>
Rendered body type: text/plain

New APRS digi will soon be on the air in sw ks on 144.390.
n0kqx-2   !3755.43N/10058.19W#5390/relay,wide
Dale Urban N0KQX
Garden City Ks.

_____
You don't need to buy Internet access to use free Internet e-mail.
Get completely free e-mail from Juno at http://www.juno.com
Or call Juno at (800) 654-JUNO [654-5866]

820. paccomm upgrade

From: deunju@juno.com (DALE E URBAN)
Date: Wed, 29 Jul 1998 16:50:41 CDT
To: aprssig@tapr.org
Message-ID: <19980729.165621.12206.3.DEUNJU@juno.com>
Rendered body type: text/plain

A couple weeks ago I sent the sig a note on not being able to get a
paccomm upgrade(APRS) for a MFJ tnc. Paccomm sent me another chip and it
works fine without any mods to the tnc. Thanks to all that sent info.

Dale Urban N0KQX
Garden City Ks.

_____
You don't need to buy Internet access to use free Internet e-mail.
Get completely free e-mail from Juno at http://www.juno.com
Or call Juno at (800) 654-JUNO [654-5866]

821. APRS T-Shirts

From: Bob Bruninga <bruninga@nadn.navy.mil>
Date: Wed, 29 Jul 1998 18:05:34 -0400 (EDT)
To: aprssig@tapr.org
Cc: rmargey@cusave.com
Message-ID: <Pine.SOL.3.96.980729180021.14859C-100000@arctic>
Rendered body type: text/plain

The "T"shirt guy just did another run. THis batch has the large
APRS letters in solid red instead of the outline red.   Also, he can now
make any size.

T-Shirts are $11 + $2.95 S&H for S, M, L and XL
              $12 + $2.95 S&H for XXL
              $19 + $2.95 S&H for Sweathshirt.

These are off-white(slight gray) shirts with a blue map of the world on
the chest. Overwritten on the map are the big letters in red APRS, and
smaller detail at the bottom of the map spelling it out.

Send orders to: Richard Margey KE1DH (rmargey@cusave.com)
                 9125 Little Rd #220
                 New Port Richey, FLorida 34654

822. APRSdos ICON

From: Bob Bruninga <bruninga@nadn.navy.mil>
Date: Wed, 29 Jul 1998 18:10:35 -0400 (EDT)
To: aprssig@tapr.org
Message-ID: <Pine.SOL.3.96.980729180826.14859E-100000@arctic>
Rendered body type: text/plain

I got to playing last night and built a little icon for APRSdos to match
my logo that you see on my web pages. If you want it, its in my tapr

directory... as AprsDos.ico. But I guess if you are running Windows, you
probably dont run DOS, so... oh well...

See DAYTON97 HISTORY: http://web.usna.navy.mil/~bruninga/dayton.html
See Maryland APRS LIVE: http://web.usna.navy.mil/~bruninga/aprs.html
See GPS on ANY radio: http://www.tapr.org/tapr/html/mic-e.html

823. Re: [APRSSIG:26662] Re: GPS III Speed Limitation?

From: "John Palese" <c4wi@execpc.com>
Date: Wed, 29 Jul 1998 17:37:34 -0500
To: "Richard Garcia" <k4gps@bellsouth.net>, k4gps@bellsouth.net,
        aprssig@tapr.org
Message-ID: <199807292239.RAA07525@mailgw02.execpc.com>
Rendered body type: text/plain

Hi:

As an air carrier pilot, if I knew it was back there I'd be obligated to
have you turn it off. The operation of radio receivers or transmitters
in the cabin of an airliner is strictly prohibited.

The problem is that mixing can occur between all the various
portable electronics brought aboard causing a signal to appear at a
previously unanticipated frequency, and this can in turn cause
interference to the onboard electronics - to include navigation
systems, the instrument landing system, and autopilot.

If you are asked to turn it off by a flight attendant please do so . . if
you do not you can be fined, under administrative law, in $1000.00
increments. [If the Captain has to get out of his or her seat to
reiterate a flight attendant instruction, the fine begins at $10,000.00
and goes up in $10,000.00 increments from there.]

Administrative law is how the IRS operates - no judge, no jury and
you are presumed guilty, until you prove yourself at your expense,
innocent.

Regards,

J.A. Palese

824. Re: [APRSSIG:26667] Re: GPS III Speed Limitation?

From: Richard Amirault <amirault@tiac.net>
Date: Wed, 29 Jul 1998 19:32:38 -0400 (EDT)
To: John Palese <c4wi@execpc.com>
Cc: aprssig@tapr.org
Message-ID: <Pine.BSF.3.96.980729192730.17893D-100000@shell2.tiac.net>
Rendered body type: text/plain

On Wed, 29 Jul 1998, John Palese wrote:

> Hi:
>
> As an air carrier pilot, if I knew it was back there I'd be obligated to
> have you turn it off. The operation of radio receivers or transmitters
> in the cabin of an airliner is strictly prohibited.
(snip)
> If you are asked to turn it off by a flight attendant please do so . . if
> you do not you can be fined, under administrative law, in $1000.00
> increments. [If the Captain has to get out of his or her seat to
> reiterate a flight attendant instruction, the fine begins at $10,000.00
> and goes up in $10,000.00 increments from there.]

Yes, thank you. I'm not in the "business", but as I understand it....

You are not allowed to operater any device not specifically listed as
permitted in the airline's published documents. The captain may, at
his/her option, *remove* items from that list, but may *not* add items to
it.

Folks you are playing russian roulette with not only your life, but
everyone else on board (and maybe some on the ground too)

Richard Amirault   N1JDU   Boston, Massachusetts USA
amirault@tiac.net   "Go Fly A Kite"

825. Re: [APRSSIG:26627] Re: Apologies for an unforgivable mistake

From: Buck Cheves <kc4gck@STC.NET>
Date: Wed, 29 Jul 1998 19:59:27 -0400
To: xe1xus@molinet.dyn.ml.org
Cc: aprssig@tapr.org
Message-ID: <35BFB75E.A931DD23@STC.NET>
Rendered body type: text/plain

Edgardo --

I work on computers for a living, and if I had to apologize for every mistake I made, I'd be doing nothing else for some time to come. Of course, I can't speak for others in this group, but I accept your apology.

As far as that goes, it was a break from all the stuff going on -- I didn't have to wonder if I had missed something important (although I did start wondering what was going on after a while).

Stick around (get your settings fixed, so you won't get everybody upset), and learn about APRS with me and a lot of others!!

73,
Buck Cheves, KC4GCK

Edgardo Molina wrote:

> Dear Jeff and APRS Group,
>
> There are not enough words to express how I feel for the mistake that I have
> done. I sincerely apologize for my lack of attention while configuring my
> e-mail gateway. I take the all the blame for not being responsible while
> configuring my equipment properly, allowing an automated delivery
> confirmation to send an unfrutful message to the list. It was never on
> purpose to bother the APRSSIG users. I corrected the problem immediately as
> I received your kind note.
>
> Thank you for calling my attention. As I am a decent person I use to receive
> messages directly and not publishing my mistakes in public. I replied your
> message as soon as I got it copying the APRSSIG just as you did, to express
> everyone else my will of not commiting any other kind of mistakes.
>
> I have enjoyed the amateur experimenting spirit for a long time since I was
> accepted to receive all the interesting postings from aprs users. I always
> try my best to behave as a gentleman. If the APRS group want me to
> unsubscribe from the list because of the unfortunate situation I have
> caused, I will be waiting for written notification and I will do it by
> myself, and not by anybody else power.
>
> Please feel free to contact me at your convenience if you need anything else
> from me. Thank you.
>
> Kindest regards
> Edgardo Molina
> XE1XUS
> Mexico City
> xe1xus@data.net.mx
>
> -----Original Message-----
> From: Jeff Brenton <jeffb@espi.com>
> To: xe1xus@molinet.dyn.ml.org <xe1xus@molinet.dyn.ml.org>
> Cc: aprssig <aprssig@tapr.org>
> Date: Tuesday, July 28, 1998 3:39 PM
> Subject: Re: [APRSSIG:26621] Delivery Confirmation RE: APRSSIG digest 1631
>
> >Could someone with power over the user list of APRSSIG please delete
> >"Edgardo Molina" <xe1xus@molinet.dyn.ml.org> until such time as he turns
> >off his automatic delivery confirmation notice?
> >--
> >
> >Jeff Brenton, Ham radio call KA9VNV
> >http://www.espi.com
> >Questionable web page: http://www.dididahdahdidit.com
> >Covert supporter of the Vast Right Wing Conspiracy (tm)

826. Re: [APRSSIG:26667] Re: GPS III Speed Limitation?

From: John Rauch <johnr@cycat.com>
Date: Wed, 29 Jul 1998 20:11:25 -0400
To: c4wi@execpc.com
Cc: APRSSIG@tapr.org
Message-ID: <3.0.3.32.19980729201125.007c1100@web-cycat.com>

Rendered body type: text/plain

At 07:23 PM 7/29/1998 -0500, you wrote:

FYI... With "Administrative Law" or Admiralty Law, Jurisdiction must be established and not "waived" by the "accused".. Be sure to set a waypoint at the place you were in when the attendant asks you to turn it off. Then turn it off....

When you are on the ground and out of the "implied" jurisdiction of the "Captain" of the ship. Then, check your waypoint.... discover which state of the 50 of the union you were over at the time of the incident. That it the true "jurisdiction" at the time of the incident, IF you are a citizen of one of the 50 states!

If you wish to "push" the issue of interstate commerce rules over constitutional citizen rights, rulings of the Supreme Court are quite clear.... in terms of jurisdiction of airspace. The Feds. control the pilots and the commercial "actors" but not the citizens in an act of moving from one state to another.

But, in all aspects of this issue.... please turn off your unit as YOU are in the plane and if it "goes down" it is hard to disembark prior to landing (hopefully softly) ;-)

John, N4YXS

>Hi:
>
>As an air carrier pilot, if I knew it was back there I'd be obligated to
>have you turn it off. The operation of radio receivers or transmitters
>in the cabin of an airliner is strictly prohibited.
>
>The problem is that mixing can occur between all the various
>portable electronics brought aboard causing a signal to appear at a
>previously unanticipated frequency, and this can in turn cause
>interference to the onboard electronics - to include navigation
>systems, the instrument landing system, and autopilot.
>
>If you are asked to turn it off by a flight attendant please do so . . if
>you do not you can be fined, under administrative law, in $1000.00
>increments. [If the Captain has to get out of his or her seat to
>reiterate a flight attendant instruction, the fine begins at $10,000.00
>and goes up in $10,000.00 increments from there.]
>
>Administrative law is how the IRS operates - no judge, no jury and
>you are presumed guilty, until you prove yourself at your expense,
>innocent.
>
>Regards,
>
>J.A. Palese
>
>
>
>
>

827. Re: [APRSSIG:26650] Kantronics TNC & Program help needed

From: Jon Ogden <jono@enteract.com>
Date: Wed, 29 Jul 98 20:27:13 -0500
To: <c4wi@execpc.com>, <aprssig@tapr.org>
Message-ID: <199807300118.UAA07627@tapr.org>
Rendered body type: text/plain

>I have a KPC3+ and KAM+.
>
>I am experimenting with demo versions of both APRS+ and WIN
>APRS.
>
>So far I have not been able to get either program to "hear" the
>TNCs.
>
>The TNCs are in the terminal mode and I have issued the
>commands required of Kantronics TNCs per the WIn APRS
>instructions.
>
>I also have not been able to get APRS+ to see or use the Street
>Atlas program.

OK, make sure you have both MCOM and MCON set to OFF. If either is sent
to ON, APRS does NOT recognize it. Also, make sure you have your baud
and serial port settings correct. Do turn MON to on though.

Hope this helps.

73,

Jon
KE9NA

Jon Ogden
KE9NA

http://www.qsl.net/ke9na

"A life lived in fear is a life half lived."

828. JAX FL HAMFEST APRS FORUM

From: BordingK@aol.com
Date: Wed, 29 Jul 1998 21:18:53 EDT
To: aprssig@tapr.org, aprs-fl@tapr.org
Message-ID: <79ab4af3.35bfc9ff@aol.com>
Rendered body type: text/plain

Jacksonville, FL Hamfest 1-2 August Prime Osborne Convention Center.

APRS Forum 2:00PM SATURDAY 1 AUG.

TOPICS:
   Overall APRS Briefing
   NWS Counties Warning Demonstration
   WinAPRS - Precision Mapping Features Demonstration
   SAV, GA MIC-E Repeater Project Briefing
   TAPR APRS Related Projects.
   Open APRS Discussion

If your in the area, hope to see you there!

de W5KNB
Ken

829. KPC 3. Ver 8.3- ????

From: "myrt webb" <mwwebb@cyberport.net>
Date: Wed, 29 Jul 1998 16:30:16 -0600
To: "APRSSIG" <aprssig@tapr.org>
Message-ID: <01bdbb40$760ce6e0$9d6f88d0@mwwebb.cyberport.net>
Rendered body type: text/plain

I have a KPC 3+ ver 8.2.

I do not get the hipe on the ver 8.3. Just because you have a second
firmware port does not do you any good if you do not have a hardware port to
plug into.

The tnc has two ports- one to the computer and one to the radio. How does
the firmware upgrade help in connecting another device??

830. Re: [amsat-bb] ALINCO DJ-s11 $88 HT Hack?

From: SEAL2CC@aol.com
Date: Wed, 29 Jul 1998 23:14:09 EDT
To: bruninga@nadn.navy.mil, aprssig@tapr.org
Cc: amsat-bb@AMSAT.Org
Message-ID: <6c2525ad.35bfe502@aol.com>
Rendered body type: text/plain

I don't have Bob's answers but thanks to him every midshipman that comes in
contact with WB4APR at the USNA gonna be a licensed ham when they throw their
covers in the air at graduation! HOOYAH Bob!

Chris NQ4E AMSAT 32017
Richmond

831. Displaying Digi's only in WinAPRS?

From: "Tom Walker" <tom@spectron.net>
Date: Wed, 29 Jul 1998 19:47:43 -0700
To: <aprssig@tapr.org>
Message-ID: <003001bdbb68$72228620$3e02d9cf@home>
Rendered body type: text/plain

Is there a way to display only digi's in WinAPRS 2.20?

832. [APRSSIG:26661] kpc-3+ Telemetry (Rev 1)

From: Bob Bruninga <bruninga@nadn.navy.mil>
Date: Wed, 29 Jul 1998 23:51:46 -0400 (EDT)
To: aprssig@tapr.org
Message-ID: <Pine.SOL.3.96.980729232636.5571A-100000@arctic>
Rendered body type: text/plain

```
*  This is a revision so that you can read both charge and discharge  *
*  currents whether or not an external plug is in the  DC connector.  *
```

I put an internal 9v rechargable battery inside my KPC-3+ and wired voltage dividers and a charge circuit so that you could read the battery voltage and the charge current with the built in KPC-3 telemetry system. This was for a student-lab project, not sure if I would ever use it this way myself, because a 9v NICAD only lasts ONE FIFTH as long as a 9v Alkaline battery. And for me, NICADS are always dead when I need them. But in this case, the KPC-3+ is to have a small solar panel for student demos, and it is perfect as a mock-satellite. It should last about 6 Hours on a full charge.

I chose voltage dividers so that the raw telemetry values (between 0 and 255) actually are human readable as VOLTS in tenths and Current in MA. Thus 138 = 13.8 volts and 42 = 30+ 12ma. (There is an offset of 30 so you can read + and - current. Here is the circuit:

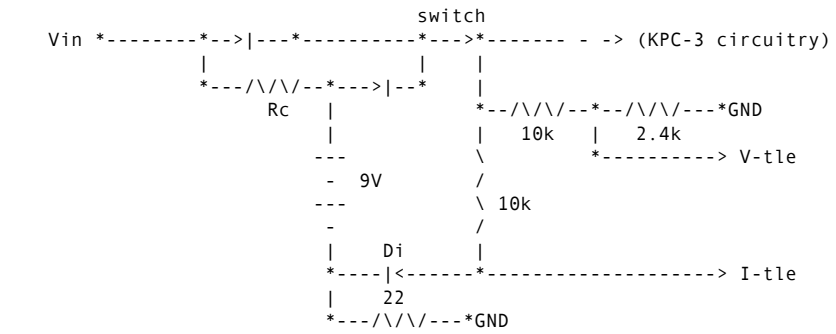

This is a "simplilfied diagram" but the idea is to add a resistor Rc so that the battery can charge when an external supply is connected. You must choose Rc to give you rated charge current (12 ma) for the supply voltage you will be using. You put a 22 ohm resistor in series with the negative lead of the battery so you can read current as the voltage drop across it. Since this voltage can go negative, you insert diode Di forward biased with a 10K to add .65 volts to the analog input.

Next you add the other voltage divider to measure the voltage at the switch (so it doesnt drain the battery when the switch is off).
Then run these two analog voltages to two of the analog input pins. I ran these to unused internal analog pins AN2 and AN3 so that the external analog inputs are still available for other sensors..

The LONGEST part of this project was finding pins 63 and 65 on the 68 pin CPU chip! Looking at the bottom of the board, with the LEDS to the left and the connectors to the right, here are the top row of CPU pins:

```
        59 61 63 65 67  1  3  5  7  9
     58 60 62 64 66 68  2  4  6  8 11 10
```

Pins 59 and 61 are the existing Analog inputs
Pins 63 and 65 are available analog inputs
Pins 67 and 1 are convenient grounds
Pins 9, 10 and 11 are NOT a typo. You count funny around the corners.
(I HOPE I got this right! I DENY any responsibility!)

Again, this is a simplified diagram, but you get the idea... Also, these values will be close to the ones needed to actually give you the actual readings in tenths of a volt and MA, but of course the only way to get it right is to use adjustable pots, but that is too much work for me. I think these will be close enough...

de WB4APR, Bob

833. APRS on "the air"

From: "Paul Knupke, Jr." <pk@ij.net>
Date: Thu, 30 Jul 1998 00:00:05 -0400
To: "Aprssig@Tapr. Org" <aprssig@tapr.org>
Message-ID: <001a01bdbb6e$891fc800$332b04d1@paul>
Rendered body type: text/plain

I just started a project that will have me produce a segment for This Week
in Amateur Radio (see www.twiar.org for more info on TWIAR) on a monthly
basis about APRS.

I am trying to come up with a name for the segment. I am not the most
creative type so I'm looking for suggestions.

The first segement should play in August and the topic will be a segment
intro followed by an intro to APRS and a short APRS news brief. I will
cover topics such as trackers, weather related features, internet/gateways,
HF applications, etc. over the coming months. I will be looking for
interviews in the coming months also.

I hope that this segment will increase the knowledge about APRS amongst more
amateur radio operators.

Thanks, 73

Paul E. Knupke, Jr.   Amateur Radio: KR4YL
pk@ij.net   Largo, FL

Proud Member of the Florida Contest Group!

834. Maps in SA4 and Precision Mapping 3

From: Earl Needham <kd5xb@amsat.org>
Date: Wed, 29 Jul 1998 22:07:27 -0600
To: aprssig@tapr.org, aprsplus@k8sn.org
Message-ID: <3.0.3.32.19980729220727.0091b7a0@mail.pdrpip.com>
Rendered body type: text/plain

I've just noticed something. When I zoom in on W7LUS-14 in SA4, I don't
get as much detail as when in Precision Mapping. Peter is currently at N40
degrees, 30 minutes, 12 seconds and W74 degrees, 20minutes, 46 seconds.
Looks to be inside the Conrail railyard in Edison, NY. I think -- I'm not
really familiar with that part of the country.
        Anyway, Precision Mapping 3.0 shows each individual road between the
tracks. SA4 shows only the main streets.

        Is there something to do to turn this on in SA4?

        7 3
        Earl

Earl Needham, KD5XB   mailto:KD5XB@AMSAT.ORG
Clovis, New Mexico   DM84 N34.403 W103.334

835. Re: [APRSSIG:26677] APRS on "the air"

From: Bob Smallwood <smallwood@technologist.com>
Date: Thu, 30 Jul 1998 00:23:49 -0400
To: pk@ij.net, aprssig@tapr.org
Message-ID: <3.0.3.32.19980730002349.008e44f0@pop.erols.com>
Rendered body type: text/plain

"Keeping Track of APRS"

At 11:06 PM 7/29/98 -0500, Paul Knupke, Jr. wrote:
>I just started a project that will have me produce a segment for
This Week
>in Amateur Radio (see www.twiar.org for more info on TWIAR) on a
monthly
>basis about APRS.
>
>I am trying to come up with a name for the segment. I am not
the most
>creative type so I'm looking for suggestions.
>

>The first segement should play in August and the topic will be a
segment
>intro followed by an intro to APRS and a short APRS news brief.
I will
>cover topics such as trackers, weather related features,
internet/gateways,
>HF applications, etc. over the coming months. I will be looking
for
>interviews in the coming months also.
>
>I hope that this segment will increase the knowledge about APRS
amongst more
>amateur radio operators.
>
>Thanks, 73
>
>Paul E. Knupke, Jr.   Amateur Radio: KR4YL
>pk@ij.net   Largo, FL
>---
>Proud Member of the Florida Contest Group!
>
>

836. RDF data format

From: chgooden@postoffice.worldnet.att.net
Date: Thu, 30 Jul 1998 00:26:04 -0500
To: aprssig@tapr.org
Message-ID: <19980730052745.CXMX27455@LOCALNAME>
Rendered body type: text/plain

To all:

I am currently building a doppler RDF system that was decribed in QST
May 1978. I would like to interface this system to APRS but do not
know what format I need to place the data into.

My plan is to use a small basic stamp cpu to read the I/O that drives
the LED display (1 LED for each 22.5 degrees) to output the data
serially in the required format for APRS.

If anyone could tell me what format I will need to send out on the
serial line I would appreciate it greatly. This information I
beleive is in the NEMA 0183 spec but whan I checked the price it was
too expensive for my needs.

Also I may need some help concering the basic Stamp cpu. If you have
had any experience I would be glad to discuss it with you furthur.

Thanks,

Chuck Gooden N9QBT
Rockford, Illinois

837. Solar Power

From: Darryl Smith <vk2tds@ozemail.com.au>
Date: Thu, 30 Jul 1998 17:47:05 +1000
To: aprssig@tapr.org
Message-ID: <35C024F8.3373F6AB@ozemail.com.au>
Rendered body type: text/plain

In fact I had a boss a couple of years ago who had NEVER EVER paid an electricity bill... He used to live in a house owned by the Electricity Commision of NSW (Australia) (Now Pacific Power), and now runs SOLAR.

He runs his whole house solar with backup of a generator when he needs it. He has got better performance on his solar cells by scattering white sand on the grass in front of the cells. And he even runs his ARC welder on the inverter....

But let me tell you what his job was... He was in charge of the electrical section in the largest coal power station in the southern hemisphere. And he still didnt use the product...

As for charges. Most people use off peak hot water power - which is turned on and off by the power company. It costs about 50% of the peak rate for power. It is usually on for 10 hours overnight and all weekend.

As for electricity costs. I think the present full price for electricity is under US$0.10/kWatt Hour regardless of use. It is about the same for consumers and businesses - and it does not change depending on the season. It is mostly from burning coal (The sulphur is so low, the UK imports our coal..).

There are options for larger users for differential charges for different times of day, but you need to buy a lot to make that worthwhile. Also larger businesses must pay a charge based on their peak demand to pay for the transmission line

Darryl Smith VK2TDS
Pacific Power

838. Re: [APRSSIG:26677] APRS on "the air"

From: Lee McDaniel <wb4qoj@roava.net>
Date: Thu, 30 Jul 1998 06:20:06 -0400
To: aprssig@tapr.org
Message-ID: <3.0.5.32.19980730062006.00983990@mail.roava.net>
Rendered body type: text/plain

Paul,

  Glad to see you do this. The BlueRidge Video and Digital Society is one of the flagship repeaters 145.21 for TWAIR. John Campbell KC4LWI maintains the web site for TWAIR here in Roanoke. And we want to thanks you for doing this.

  Now to the question. We have been using in all our hand outs and Demos that we do here is "APRS The Rebirth of Packet Radio". If you choose to use that
I think it says it all.

   73 Lee McDaniel WB4QOJ
  The BlueRidge Video and Digital Society"
  www.roava.net/bvds.org
  "The BVDS Weather Network APRS 145.79 and EMWIN 148.775">

>At 23:06 7/29/98 -0500, you wrote:
>>I just started a project that will have me produce a segment for This Week
>>in Amateur Radio (see www.twiar.org for more info on TWIAR) on a monthly
>>basis about APRS.
>>
>>I am trying to come up with a name for the segment. I am not the most
>>creative type so I'm looking for suggestions.
>>
>>The first segement should play in August and the topic will be a segment
>>intro followed by an intro to APRS and a short APRS news brief. I will
>>cover topics such as trackers, weather related features, internet/gateways,
>>HF applications, etc. over the coming months. I will be looking for
>>interviews in the coming months also.
>>
>>I hope that this segment will increase the knowledge about APRS amongst more
>>amateur radio operators.
>>
>>Thanks, 73
>>
>>Paul E. Knupke, Jr.   Amateur Radio: KR4YL
>>pk@ij.net   Largo, FL
>>---
>>Proud Member of the Florida Contest Group!
>>
>>

839. Com-Flow Prob Update

From: Robert Burton <kd4ydc@bellsouth.net>
Date: Thu, 30 Jul 1998 07:00:17 -0400
To: aprssig@tapr.org
Message-ID: <35C05240.A84596A4@bellsouth.net>
Rendered body type: text/plain

Thanks for all the responds to my problem!
In the true spirit of "Ham Radio" this is being done on a shoe string budget. Not that I am
cheap...just a band director w / yl and 3 little yl'ings...radio $ comes from teaching
trumpet lessons each summer! "HAMS ON A BUDGET...LOOK HERE!"
8088 Laptop (IBM PC CONVERTABLE) - $25 to $35 at fest, KPC3 (old chip, remember for a tracker you need at least a 6.0..I think) - $40, GPS45 (8chan) - $100
(BTW-the folks that responded to my WTB on GPS's...I may hv some buyers for
yours too!) Radio...you have one of those..use it! If not...used, pick up an older one

for right at $100...NEW, got an ADI mobile for $189.00 at fest last
fall. Works great!
    To My Update: (I'll make it quick...hi)
The flow prob was in the cable not switching...rewired and seems to be
switching now.
Sometimes recieve packets arent on the bottom, this happens
spuraticly....I see at the
bottom (sometimes) RMC: , LN: ,   with a blank space after (this is on
the recieve line).
I sometimes get "BAD NMEA" in the upper when I don't hv a good fix.
This will cause
the thing to go deaf when this happens...also happens when the RMC: or
LN: sits down
there too. Going to try to slow down to 1200baud (no 2400 avail on 45).

May hv to break down and pick up an 386 laptop w/ 2 ser.s with my last
$100 of the
summer. (I am going to get this 8088 to work first! :-)   )
Thanks Everyone!
Robert
KD4YDC

840. Re: [APRSSIG:26667] Re: GPS III Speed Limitation?

From: Ralph Fowler <rwf@BSRG.org>
Date: Wed, 29 Jul 1998 19:41:18 -0400
To: aprssig@tapr.org
Message-ID: <Version.32.19980729193810.01247dd0@ccegate.cokecce.com>
Rendered body type: text/plain

Hmmm..

Must not work for DELTA, where radio receivers (at least VHF Scanning ones)
are A-OK!

At 05:42 PM 7/29/98 -0500, you wrote:
<snip>
 The operation of radio receivers or transmitters
>in the cabin of an airliner is strictly prohibited.

841. Re: [APRSSIG:26656] ALINCO DJ-s11 $88 HT Hack?

From: Bob Bruninga <bruninga@nadn.navy.mil>
Date: Thu, 30 Jul 1998 09:40:58 -0400 (EDT)
To: aprssig@tapr.org
Message-ID: <Pine.SOL.3.96.980730093519.19188F-100000@arctic>
Rendered body type: text/plain

Several people responded helpfully with info on where to get the stereo
sub-min plug, but that was not the real question of my post. My question
was about the fact that there was a serial port connection to the HT's CPU
via its mic jack.

What is there to program in an HT with *no memories*...?

Last night I noticed with a magnifying glass that there are actually TWO
serial ports on the same connector! One is labeled RXD/TXD to the CPU and
the other is labeled CLONE.

Now what can you clone in a single channel (no memories) HT?

Just curious; BOb.

  [APRS related due to many people purchased these for trackers..]

ALSO! Alinco has responded with email saying that they "are working on a
fix" for the receiver battery saver circuit....

842. Re: [APRSSIG:26667] Re: GPS III Speed Limitation?

From: Steve Dimse K4HG <k4hg@tapr.org>
Date: Thu, 30 Jul 1998 09:46:54 -0400
To: <c4wi@execpc.com>, "aprssig" <aprssig@tapr.org>
Message-ID: <199807301346.IAA19135@tapr.org>
Rendered body type: text/plain

On 7/29/98 6:42 PM John Palese (c4wi@execpc.com) wrote:

>As an air carrier pilot, if I knew it was back there I'd be obligated to
>have you turn it off. The operation of radio receivers or transmitters
>in the cabin of an airliner is strictly prohibited.

>
Delta specifically allows scanners, and any other electronic device not
specifically excluded (and GPS is not excluded) during the same periods
of flight they allow computers, generally above 10,000 feet.

Steve K4HG

843. RE: [APRSSIG:26652] Re: SA 5.0 vs. Precision Mapping 3.0?

From: Skip Allison-CFAD07 <Skip_Allison-CFAD07@email.mot.com>
Date: Thu, 30 Jul 1998 9:54:56 -0500
To: aprssig@tapr.org
Message-ID: <"Macintosh */PRMD=MOT/ADMD=MOT/C=US/"@MHS>
Rendered body type: text/plain

To: APRS SIG
From: Allison-CFAD07 Skip on Thu, Jul 30, 1998 9:49 AM
Subject: RE: [APRSSIG:26652] Re: SA 5.0 vs. Precision Mapping 3.0?

>of course, APRS+SA can still and always has been able to track a moving
>object(s) and stay on them like glue, to the street level.

BH, KH2Z

On the subject of tracking, when track lines are turned on, the map centers
on the center of the track line. Could it be changed to still center on the
station? Or maybe have the option to center on the station OR center on the
center of the track line and zoom so the track line all fits on the screen?
I like to leave the track lines on so I can see where the tracker has been
and maybe get an idea where he's going.

Skip
K9SA

844. Re: [APRSSIG:26673] KPC 3. Ver 8.3- ????

From: Jon Ogden <jono@enteract.com>
Date: Thu, 30 Jul 98 10:07:54 -0500
To: <mwwebb@cyberport.net>, <aprssig@tapr.org>
Message-ID: <199807301505.KAA22280@tapr.org>
Rendered body type: text/plain

>I do not get the hipe on the ver 8.3. Just because you have a second
>firmware port does not do you any good if you do not have a hardware port to
>plug into.
>
>The tnc has two ports- one to the computer and one to the radio. How does
>the firmware upgrade help in connecting another device??

Doesn't it have two radio ports?

Or perhaps you use some unused pins on the radio port you do have??

73,

Jon
KE9NA

Jon Ogden

jono@enteract.com
www.qsl.net/ke9na

"A life lived in fear is a life half lived."

845. Re: [APRSSIG:26685] Re: ALINCO DJ-s11 $88 HT Hack?

From: Jon Ogden <jono@enteract.com>
Date: Thu, 30 Jul 98 10:11:33 -0500
To: "Bob Bruninga" <bruninga@nadn.navy.mil>, <aprssig@tapr.org>
Message-ID: <199807301508.KAA22433@tapr.org>
Rendered body type: text/plain

>Last night I noticed with a magnifying glass that there are actually TWO
>serial ports on the same connector! One is labeled RXD/TXD to the CPU and
>the other is labeled CLONE.

Perhaps they use the same circuit boards for this radio and their more
fancy designs with memories. Many times companies do this to save costs.
 They just don't activate the features nor include the peripheral
hardware for them. The main motherboard may likely be the same though.

Just my 2 cents.

73,

jon
KE9NA

Jon Ogden

jono@enteract.com
www.qsl.net/ke9na

"A life lived in fear is a life half lived."

846. [APRSSIG:26676] kpc-3+ Telemetry (Rev 2)

From: Bob Bruninga <bruninga@nadn.navy.mil>
Date: Thu, 30 Jul 1998 11:16:10 -0400 (EDT)
To: aprssig@tapr.org
Message-ID: <Pine.SOL.3.96.980730110449.10118A-100000@arctic>
Rendered body type: text/plain

* FINAL REV as built *
* This is a revision so that you can read both charge and discharge *
* currents whether or not an external plug is in the DC connector. *

I put an internal 9v rechargable battery inside my KPC-3+ and wired
voltage dividers and a charge circuit so that you could read the battery
voltage and the charge current with the built in KPC-3 telemetry system.
This was for a student-lab project, not sure if I would ever use it
this way myself, because a 9v NICAD only lasts ONE FIFTH as long as a 9v
Alkaline battery. And for me, NICADS are always dead when I need them.
But in this case, the KPC-3+ is to have a small solar panel for student
demos, and it is perfect as a mock-satellite. It should last about 6
Hours on a full charge.

I chose voltage dividers so that the raw telemetry values (between 0 and
255) actually are human readable as VOLTS in tenths and Current in MA.
Thus 138 = 13.8 volts and 68 = 60+ 8ma. (There is an offset of 60 so you
can read + and - current. Here is the circuit:

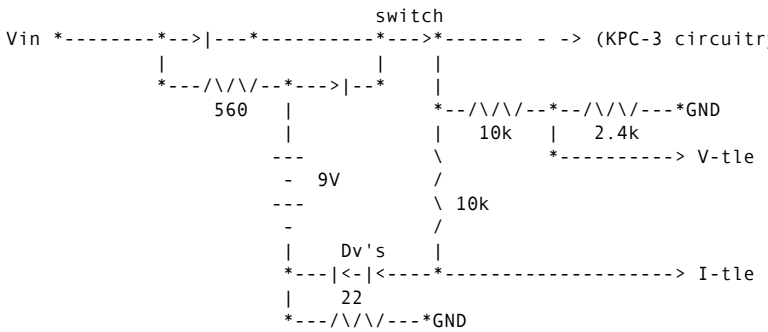

This is a "simplilfied diagram" but the idea is to add a resistor (560) so
that the battery can charge when an external supply is connected. You
must choose this resistor to give you rated charge current (12 ma) for the
supply voltage you will be using. Im using 560 ohms to give me only 8ma
on 13 volts.   Next put a 22 ohm resistor in series with the
negative lead of the battery so you can read current as the voltage drop
across it. Since this voltage can go negative, you insert two diodes (Dv)
forward biased with a 10K to add 1.3 volts to the analog input.

Next you add the other voltage divider to measure the voltage at the
switch (so it doesnt drain the battery when the switch is off).
Then run these two analog voltages to two of the analog input pins. I ran
these to unused internal analog pins AN2 and AN3 so that the external
analog inputs are still available for other sensors..

The LONGEST part of this project was finding pins 63 and 65 on the 68 pin
CPU chip! Looking at the bottom of the board, with the LEDS to the left

and the connectors to the right, here are the top row of CPU pins:

```
        59 61 63 65 67  1  3  5  7  9
     58 60 62 64 66 68  2  4  6  8 11 10
```

Pins 59 and 61 are the existing Analog inputs
Pins 63 and 65 are available analog inputs
Pins 67 and 1 are convenient grounds
Pins 9, 10 and 11 are NOT a typo. You count funny around the corners.
(I HOPE I got this right!   I DENY any responsibility!)

Again, this is a simplified diagram, but you get the idea... Also, these values will be close to the ones needed to actually give you the actual readings in tenths of a volt and MA, but of course the only way to get it right is to use adjustable pots, but that is too much work for me. I think these will be close enough... Apparently this circuit is not as linear as I wanted, so that the charge current is about 1 Ma per count, but the discharge current is up to 1.6 counts per Ma. THus, a reading of 30 should equal 30 Ma (60 minus 30) but it is actually closer to 18 Ma.

de WB4APR, Bob

847. KPC3 Remote control

From: Bob Bruninga <bruninga@nadn.navy.mil>
Date: Thu, 30 Jul 1998 11:30:47 -0400 (EDT)
To: aprssig@tapr.org
Message-ID: <Pine.SOL.3.96.980730111613.10118B-100000@arctic>
Rendered body type: text/plain

One more thing I noticed while playing wiht my KPC-3, that in addition to the two remote control outputs, you can also use the POWER led as a remote control line just by using the LEDS ON/OFF command...

for what it is worth...

bob

848. FW: [APRSSIG:26673] KPC 3. Ver 8.3- ????

From: Skip Allison-CFAD07 <Skip_Allison-CFAD07@email.mot.com>
Date: Thu, 30 Jul 1998 10:31:59 -0500
To: aprssig@tapr.org
Message-ID: <"Macintosh */PRMD=MOT/ADMD=MOT/C=US/"@MHS>
Rendered body type: text/plain

To: APRS SIG
From: Allison-CFAD07 Skip on Thu, Jul 30, 1998 10:26 AM
Subject: FW: [APRSSIG:26673] KPC 3. Ver 8.3- ????

_____
To: aprssig@tapr.org@INTERNET
From: mwwebb@cyberport.net@INTERNET on Jul 29, 1998 21:56
Subject: [APRSSIG:26673] KPC 3. Ver 8.3- ????

I have a KPC 3+ ver 8.2.

I do not get the hipe on the ver 8.3. Just because you have a second firmware port does not do you any good if you do not have a hardware port to plug into.

The tnc has two ports- one to the computer and one to the radio. How does the firmware upgrade help in connecting another device??

The GPS receiver connects to one of the pins on the radio port (well, 2 if you count ground). So the radio connector is like 2 connectors in one. This is great because with this setup, you don't need an HSP cable or 2 ports on the computer. I'm saving my pennies to replace my KPC3 with a 3+.

Skip
K9SA

849. KPC 3. Ver 8.3- ????

From: Michael Huslig <mhuslig@idir.net>
Date: Thu, 30 Jul 1998 10:37:12 -0500

To: aprssig@tapr.org
Message-ID: <199807301436.JAA04177@mail.kc.idir.net>
Rendered body type: text/plain

The 8.3 firmware for the KPC3+ allows a user to connect the output from a
GPS unit to the XCD pin of the radio port, freeing the RS232 port of the
KPC3+ to communicate directly with the computer.
Mike

At 10:11 AM 7/30/98 -0500, you wrote:
>>I do not get the hipe on the ver 8.3. Just because you have a second
>>firmware port does not do you any good if you do not have a hardware port to
>>plug into.
>>
>>The tnc has two ports- one to the computer and one to the radio. How does
>>the firmware upgrade help in connecting another device??
>
>Doesn't it have two radio ports?
>
>Or perhaps you use some unused pins on the radio port you do have??
>
>73,
>
>Jon
>KE9NA
>
>
>---
>Jon Ogden
>
>jono@enteract.com
>www.qsl.net/ke9na
>
>"A life lived in fear is a life half lived."
>
>

850. KISS source code

From: Jeff Brenton <jeffb@espi.com>
Date: Thu, 30 Jul 1998 11:02:16 -0500
To: aprssig <aprssig@tapr.org>
Message-ID: <35C09908.4864@espi.com>
Rendered body type: text/plain

I'm looking for source code for a KISS-compatable driver. I have a
couple of programs I want to write that will need to speak KISS, but I
don't want to reinvent the wheel.

Prefer either Pascal or C/C++ source, but will use BASIC as a last
resort. Searching the web has come up with a lot of leads for
implementing KISS on the TNC side, but little in the way of code for the
computer/application side!
--

Jeff Brenton, Ham radio call KA9VNV
http://www.espi.com
Questionable web page: http://www.dididahdahdidit.com
Covert supporter of the Vast Right Wing Conspiracy (tm)

851. WinAPRS version 2.2.1

From: Mark Sproul <msproul@ap.org>
Date: Thu, 30 Jul 1998 12:11:58 -0400
To: aprssig@tapr.org, aprsnews@tapr.org
Message-ID: <v03110707b1e64b536d69@[165.1.27.20]>
Rendered body type: text/plain

A new version of WinAPRS has been posted on Rutgers, I will be putting it
on TAPR as soon as I can.

MacAPRS should be up shortly

MacAPRS Version 3.2.1 - July 30, 1998
WinAPRS Version 2.2.1

       Autoscrolling of maps can now center on any station, click on a
        station icon and select AUTOSCOLL MOVING MAP from the Display
        menu.
       Precision Map window comes up on startup if the OCX is installed
       Overlays and tracks work properly on Prec Map window

```
       Added support for dos Compressed Line format maps
       More work on metric/English display
       Changes to map window buttons, individual buttons not present
        if not valid
       Added Icon Window
       Added RESET WINDOW LOCATIONS command to force it to forget
        "remembered" window locations


Mark

_____________________________________________________________________
Mark Sproul                     |
Software Engineer @ Assoc Press |Work: 609-860-7120
msproul@ap.org                  |Fax:  609-860-7129
_____________________________________________________________________
```

852. Re: [APRSSIG:26685] Re: ALINCO DJ-s11 $88 HT Hack?

From: Wally Foster <wfoster@hsc.usc.edu>
Date: Thu, 30 Jul 1998 09:21:12 -0700
To: bruninga@nadn.navy.mil
Cc: aprssig@tapr.org
Message-ID: <35C09D78.74C1ED6F@hsc.usc.edu>
Rendered body type: text/plain

Where did you get this 'special' DJ-S11 with 'no memories' ?? Mine has
20 plus a call channel..
Interesting that they would make a different model for just the East
coast<g>..

853. Re: [APRSSIG:26688] Re: KPC 3. Ver 8.3- ????

From: Wally Foster <wfoster@hsc.usc.edu>
Date: Thu, 30 Jul 1998 09:22:51 -0700
To: jono@enteract.com
Cc: aprssig@tapr.org
Message-ID: <35C09DDB.E08E2F7D@hsc.usc.edu>
Rendered body type: text/plain

GPS data in goes to pin 2 on the RADIO connector with the 8.3 rev...
This allows the serial port to remain available for the confuser cable..
I've been playing with mine (beta) since Dayton and it's working well..
Wally N6CDJ

854. Re: [APRSSIG:26685] Re: ALINCO DJ-s11 $88 HT Hack?

From: Jeff Reinhardt <jreinh@ix.netcom.com>
Date: Thu, 30 Jul 1998 09:39:06 -0700
To: bruninga@nadn.navy.mil
Cc: aprssig@tapr.org
Message-ID: <35C0A1AA.5DAB@ix.netcom.com>
Rendered body type: text/plain

Bob and SIG: The Alinco DJ-S11T has 21 memory channels. 20 are "normal"
memories and the "CALL" channel is number 21. Sounds to me like you may
be running the radio in the VFO mode only. Each memory can record TX,
RX, any repeater split in the 2 meter band and CTCSS code for TX. It is
my understanding the DJ-S11 can be cloned (by wire) to another DJ-S11,
but I have not tried it. The DJ-S41 (440 MHz version) cannot be cloned.
I have used both the DJ-S11 and the DJ-S41 on packet.

Jeff Reinhardt
AA6JR
==========

Bob Bruninga wrote:
> Several people responded helpfully with info on where to get the stereo
> sub-min plug, but that was not the real question of my post. My question
> was about the fact that there was a serial port connection to the HT's CPU
> via its mic jack.
>
> What is there to program in an HT with *no memories*...?
>
> Last night I noticed with a magnifying glass that there are actually TWO
> serial ports on the same connector! One is labeled RXD/TXD to the CPU and
> the other is labeled CLONE.
>
> Now what can you clone in a single channel (no memories) HT?
>
> Just curious; BOb.

>
>   [APRS related due to many people purchased these for trackers..]
>
> ALSO! Alinco has responded with email saying that they "are working on a
> fix" for the receiver battery saver circuit....

855. Re: [APRSSIG:26630] Re: Com-Over Flow

From: John W Wilson <z004391b@bc.seflin.org>
Date: Thu, 30 Jul 1998 12:58:42 -0400 (EDT)
To: Byron Smith <wa6ylb@theworks.com>
Cc: aprssig@tapr.org
Message-ID: <Pine.3.89.9807301221.B1825-0100000@bc.seflin.org>
Rendered body type: text/plain

Sounds like the GPS and the TNC are swapped at the HSP cable.

John W. Wilson, KN4HX
z004391b@bcfreenet.seflin.lib.fl.us

On Tue, 28 Jul 1998, Byron Smith wrote:

> Bob B - this is exactly what I have complained about. The garmin units
> place so many gps strings out to the pc on the HSP side of things, that it
> causes aprs
> to "Choke" on them, and stay "lost" for 30 seconds or more. It eventually gets
> a posit, but its very non responcive. I am running a 386sx20 and it does this
> same thing. Finally had to give up using hsp, and found a second serial port
> for this 386sx20 laptop. The 486dx75 laptop didnt choke as much, but you
> could tell it was having a bit of trouble too.
> If you go to O C T mode, and toggle HSP to view the data from
> the GPS, every thing looks good. Its not the HSP cable doing it.
> If it were, then you'd wouldnt see data from the GPS
>
> ---This I'm sure isnt a problem for GPS units that are "programmable" to
> output a single GPS string, once a second. Typical Garmins output 12 lines
> twice a second.
>
>
> At 08:58 AM 7/28/98 -0500, you wrote:
> >Just got a GPS45 and a KPC3 (5.1) and am running this with a 8088
> >laptop.
> >(Not tracker mode). Made up a hsp cable from:
> >http://Othello.localaccess.com/nwaprs/hsp.htm
> >I keep having problems with I/O glitches and Com-Over Flows to the
> >point that it locks up. I also see the NMEA sentences from the GPS
> >along the bottom constantly (cannot gain control of the keyboard
> >sometimes). Am desperately trying to get this worked out for our
> >trip to Disney World this Sunday. Any ideas?? Running
> >KD4YDC-9 if you want to see.
> >HELP!!!!!
> >Robert
> >KD4YDC
> >
> >
> >
> Byron Smith
> wa6ylb@theworks.com - Website: theworks.com/~wa6ylb
> wa6ylb@wa6ylb.#cca.ca.usa.noam
>
> If a turtle doesn't have a shell, is he homeless or naked?
>

856. Re: [APRSSIG:26695] WinAPRS version 2.2.1

From: owen8914@dpnet.net (William Owens)
Date: Thu, 30 Jul 1998 12:59:39 -0400
To: msproul@ap.org
Cc: aprssig@tapr.org
Message-ID: <35C0A67A.109A3B34@dpnet.net>
Rendered body type: text/plain

Mark Sproul wrote:

> A new version of WinAPRS has been posted on Rutgers, I will be putting it
> on TAPR as soon as I can.
>

The one marked as July, 30 1997 404 kb?

857. Re: [APRSSIG:26691] KPC3 Remote control

```
From: Bill Vodall <wa7nwp@bigsky.com>
Date: Thu, 30 Jul 1998 10:21:08 -0700 (PDT)
To: bruninga@nadn.navy.mil
Cc: aprssig@tapr.org
Message-ID: <199807301721.KAA02256@eagle.bigsky.com>
Rendered body type: text/plain
```

```
>
> One more thing I noticed while playing wiht my KPC-3, that in addition to
> the two remote control outputs, you can also use the POWER led as a remote
> control line just by using the LEDS ON/OFF command...
>
> bob


Is there any way to activate this besides in Remote Sysop mode?

It would be cool (and useful) to be able to toggle this from
over the air...   Something like turning on a Flashing Strobe
for 15 seconds on a remote digi every time it responds to a
?APRS? query.

Bill - WA7NWP
```

858. Re: [APRSSIG:26700] Re: WinAPRS version 2.2.1

```
From: Mark Sproul <msproul@ap.org>
Date: Thu, 30 Jul 1998 13:31:55 -0400
To: owen8914@dpnet.net, aprssig@tapr.org
Message-ID: <v0311070cb1e65e80ef25@[165.1.27.20]>
Rendered body type: text/plain
```

```
At 1:11 PM -0400 7/30/98, William Owens wrote:
>Mark Sproul wrote:
>
>> A new version of WinAPRS has been posted on Rutgers,  I will be putting it
>> on TAPR as soon as I can.
>>
>
>The one marked as July, 30  1997  404 kb?



If I look at it with an FTP program, it shows up as 1998, if I look at it
with a web browser, it shows up as 97,  it is the correct one.


Mark

_____________________________________________________________________
Mark Sproul                      |
Software Engineer @ Assoc Press  |Work: 609-860-7120
msproul@ap.org                   |Fax:  609-860-7129
_____________________________________________________________________
```

859. Displaying digi's only in WinAPRS

```
From: "Tom Walker" <tom@spectron.net>
Date: Thu, 30 Jul 1998 10:36:58 -0500
To: <aprssig@tapr.org>
Message-ID: <003e01bdbbcf$fb3dd600$acb3d6cf@tom>
Rendered body type: text/plain
```

```
Is there a way to display Digi's only in WinAPRS?
```

860. Tripmate Mini-Tracker

```
From: Bob Oesterlin <oester@us.ibm.com>
Date: Thu, 30 Jul 1998 13:56:39 -0400
To: <aprssig@tapr.org>
Message-ID: <5010400025445938000002L082*@MHS>
Rendered body type: text/plain
```

```
After modifing my Tripmate with the self-start mod and a 5V 7805 regulator, I
got to thinking that the top half of the case (where the batteries were) would
be a perfect place for a MIM module from Clement Engineering. I could probably
even put a 9V battery and have a self-contained tracker - I'll have to do some
tests on the lifetime.

I ordered an MIM, and while I am waiting for it to arrive, I was mulling over
```

what types of connectors I could squeeze into the case. Right now, I 'm looking at the following configuration:

1 - ext power connector (2 pin jack with switch for int/ext power)
1 - Serial Connector, for programming (maybe a stereo jack with switch - RXD/TXD and ground)
1 - connector for Radio (?? Needs to be 4 lines -TXA,PTT, Hold and Gnd)

Looking for opinions on what the last connector should be - was thinking a RJ-45 or Mini-DIN.

Other options are to make all the connectors on a short "dongle" as I want the unit to be water tight if possible. Or maybe just one 7 line connector connector (Pwr, Gnd, RXD,TXD,TXA,PTT, Hold) and then use various adapters to hook things up?

Bob
--
Bob Oesterlin, N0EST
Rochester MN oester@us.ibm.com

861. Re: [APRSSIG:26703] Displaying digi's only in WinAPRS

From: Mark Sproul <msproul@ap.org>
Date: Thu, 30 Jul 1998 14:12:35 -0400
To: tom@spectron.net, aprssig@tapr.org
Message-ID: <v0311070fb1e667be1b42@[165.1.27.20]>
Rendered body type: text/plain

At 1:48 PM -0400 7/30/98, Tom Walker wrote:
>Is there a way to display Digi's only in WinAPRS?

Its a little bit of work but you can go to the station list and FLAG each station that you want displayed, then go to DISPLAY and select FLAGGED STATIONS ONLY

To FLAG a station, click on the entry in ANY station list and hit F, this will toggle the FLAGGED status, i.e. if its allready flagged, will UNFLAG it.

Mark

_____
Mark Sproul |
Software Engineer @ Assoc Press |Work: 609-860-7120
msproul@ap.org |Fax: 609-860-7129
_____

862. [APRSSIG:26690] kpc-3+ TLM Rev-3

From: Bob Bruninga <bruninga@nadn.navy.mil>
Date: Thu, 30 Jul 1998 14:44:40 -0400 (EDT)
To: aprssig@tapr.org
Message-ID: <Pine.SOL.3.96.980730141753.15669A-100000@arctic>
Rendered body type: text/plain

Sorry for all the revs. THis is it.
* Last rev had nonlinear response due to the HI-z source impedance of the
* series 22 ohm resistor and lack of DC filtering of pulses caused by the
* low dropout regulator. Fix required either a 220 uF cap (too big to
* fit, or adding a Hi-z A/D filter. Thus the dropping diodes were
* changed to a resistor and a .1 cap can filter it OK.

This circuit allows you to read the voltage and current of a 9v NICAD inside a KPC-3+ and have the resultant telemetry values read out in tenths of a volt and in MA. This was for a student-lab project, not sure if I would ever use it myself, because a 9v NICAD only lasts ONE FIFTH as long as a 9v Alkaline battery. And for me, NICADS are always dead when I need them. But in this case, the KPC-3+ is to have a small solar panel as a mock-satellite for student demos. Good for about 5 hours on a charge.

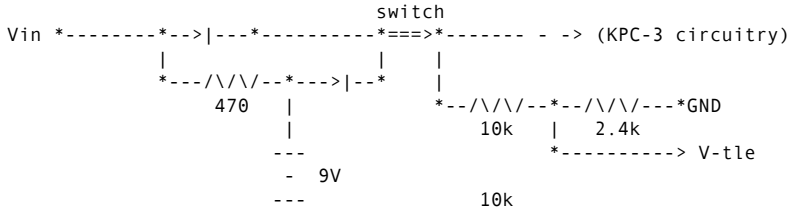

```
                              -            *--/\/\/--* +5v
                              |    6.8k    |
                              *---/\/\/----*--------------------> I-tle
                              |    30     ===.1uF
                              *---/\/\/----*---------*GND
```

This is a "simplilfied diagram" but the idea is to add a 470 ohm resistor
so the battery can charge at 12 Ma when an external supply is connected.
Next put a 30 ohm resistor in series with the negative lead of the battery
so you can read current as the voltage drop across it. Since this voltage
can go negative, you add a voltage divider of a 6.8 and 10k resistor to
bias the reading up near a count of 100.

Another 2.4 and 10k voltage divider measures the input voltage at the
switch (so it doesnt drain the battery when the switch is off).
Then run these two analog voltages to two of the analog input pins. I ran
these to unused internal analog pins AN2 and AN3 so that the external
analog inputs are still available for other sensors..

The LONGEST part of this project was finding pins 63 and 65 on the 68 pin
CPU chip! Looking at the bottom of the board, with the LEDS to the left
and the connectors to the right, here are the top row of CPU pins:

```
        59 61 63 65 67  1  3  5  7  9
     58 60 62 64 66 68  2  4  6  8 11 10
```

Pins 59 and 61 are the existing Analog inputs
Pins 63 and 65 are available analog inputs
Pins 67 and 1 are convenient grounds
Pins 9, 10 and 11 are NOT a typo. You count funny around the corners.
(I HOPE I got this right!   I DENY any responsibility!)

Again, this is a simplified diagram, but you get the idea... Also, these
values will be close to the ones needed to actually give you the actual
readings in tenths of a volt and MA, but of course the only way to get it
right is to use adjustable pots, but these are close enough for me.
A reading of 100 equals no current and 112 means 12 ma charge and 82 means
a discharge of 18 Ma.

de WB4APR, Bob

863. Re: [APRSSIG:26685] Re: ALINCO DJ-s11 $88 HT Hack?

From: Bob Bruninga <bruninga@nadn.navy.mil>
Date: Thu, 30 Jul 1998 14:54:00 -0400 (EDT)
To: Wally Foster <wfoster@hsc.usc.edu>
Cc: aprssig@tapr.org
Message-ID: <Pine.SOL.3.96.980730145201.15669F-100000@arctic>
Rendered body type: text/plain

On Thu, 30 Jul 1998, Wally Foster wrote:

> Where did you get this 'special' DJ-S11 with 'no memories' ?? Mine has
> 20 plus a call channel..

Stoopid me! I only use it on 144.39, never read the manual! OK, back to
original question.... since they have a serial port from the CPU on the
schematic labeled "CLO" connected to the Mic jack, anyone know how to
clone them?

864. Re: RDF data format

From: Mike Musick <71301.3106@compuserve.com>
Date: Thu, 30 Jul 1998 14:57:49 -0400
To: Blind.Copy.Receiver@compuserve.com
Message-ID: <199807301500_MC2-54A0-4540@compuserve.com>
Rendered body type: text/plain

>I am currently building a doppler RDF system that was decribed in QST
>May 1978. I would like to interface this system to APRS but do not
>know what format I need to place the data into.

We're reaching back pretty far, Chuck... is this the original "Roanoke Doppler"
article? Or is it the Selim design?

In either case, there is a circuit already developed by N7LUE to do what you're
looking for, and I know that at least APRSdos understands the output. The most
recent e-mail address I can find for Robert is three years old, at
CMPK59D@prodigy.com. I don't know if the circuit was published, but the
board/kit he was or is selling was reviewed in the August 1995 "73" column,
"Homing In".

>This information I beleive is in the NEMA 0183 spec

I don't know of any amateur-affordable ARDF systems that support NMEA0183. The commerically-marketed boxes (Directional Systems and Agrelo Engineering) which have serial ports each have their own way of doing things.

>but whan I checked the price it was too expensive for my needs.

What did you price, Chuck? Directional Systems? If so, I agree; their product is usually sold in the commercial/public safety communications market and is priced accordingly.

However, if you feel that pricing is a problem with the Agrelo Engineering DFjr (www.agrelo.com), then you might not have a complete grasp of the end cost of building your own, especially when you start getting into the cost of a BASIC Stamp and its development system. I have built three Roanokes or derivatives in the last 20 or so years, and can attest that each and every one had an end cost greater than buying a DFjr outright at $400. It's the same as building your own HT - possible, but why do it when you can save time AND money and have a better end result by buying the commericial version?

Also, while the basic concepts have survived the 20 years relatively unscathed, the PIN diode-based antenna switching harness described with the original Roanoke and its contemporaries has been superceded by other, much more effective designs.

For what it's worth...

...mike/N0QBF
71301.3106@compuserve.com

865. Aircraft interference

From: joe.lagreek@edwardjones.com
Date: Thu, 30 Jul 1998 14:59:01 -0500
To: aprssig@tapr.org
Message-ID: <H000021e004a791d@MHS>
Rendered body type: text/plain

At my previous job I traveled a lot, 4 - 6 days a week. That is why it's my previous job. On a flight from Birmingham AL back to St. Louis I pulled out my NEC laptop and started doing some work. A few minutes later the flight attendant was yelling, yes yelling at me to turn it off. I started the shutdown as soon as I was told, but that was not fast enough for her. She came back yelling louder to turn it off. By that time the "Its now safe message..." was up and it was turned off. I was then informed the captain wanted to talk to me after we landed. The captain told me that my computer had knocked us 5 MILES off course. We were in full IFR mode and it was at night. Air traffic control had asked him why he was off course, which is how he found out. I explained to him that as soon as I was told I started to shutdown but it took a couple of minutes to complete, I also said that I did not hear or it was not announced to turn off you electronics. The captain and I had a little talk about RFI and such and I was on

I found out latter that the aircraft has a 'glass' cockpit. Meaning most of the instruments have be replaced by CRTs. Also the avionics bay is in the rear of this plane and all the cables run from there to the cockpit. The aircraft was a J-41 twin engine turbo-prop 'puddle jumper'.

I know that this is off topic, but several people are talking about running GPS in aircraft, and you never know which device could cause a problem.

73 de N0OTM

Joe

Joe LaGreek
IS Mainframe
Bldg 201 2nd floor
Phone: (314) 515-2721
Pager: (314) 509-6549
Fax: (314) 515-4659
E-mail: joe.lagreek@edwardjones.com

866. Re: [APRSSIG:26691] KPC3 Remote control

From: Ralph Fowler <rwf@BSRG.org>
Date: Thu, 30 Jul 1998 17:32:08 -0400
To: aprssig@tapr.org
Message-ID: <199807302153.RAA12478@cocacola-bh.cokecce.com>
Rendered body type: text/plain

What it's worth is that now those of us with a KPC-3 can now derive a signal to cycle power to a crummy, hidden GPS-30 that needs a restart to

gain lock.

THANKS Bob!!!

Bob wrote:
<snip>>you can also use the POWER led as a remote
>control line just by using the LEDS ON/OFF command...

867. Re: [APRSSIG:26708] Re: RDF data format

From: "george kammerzell" <gkammerzell@denver-net.com>
Date: Thu, 30 Jul 1998 16:27:58 -0600
To: <aprssig@tapr.org>
Message-ID: <000601bdbc09$4ee10820$3416e3cc@thornton>
Rendered body type: text/plain

the interface was turned public domain about a year back for more info try
http://members.aol.com/homingin/index.html
and look through the links to the page on the interface

N0ZED

-----Original Message-----
From: Mike Musick <71301.3106@compuserve.com>
To: aprssig@tapr.org <aprssig@tapr.org>
Date: Thursday, July 30, 1998 8:36 AM
Subject: [APRSSIG:26708] Re: RDF data format

>>I am currently building a doppler RDF system that was decribed in QST
>>May 1978. I would like to interface this system to APRS but do not
>>know what format I need to place the data into.
>
>We're reaching back pretty far, Chuck... is this the original "Roanoke
Doppler"
>article? Or is it the Selim design?
>
>In either case, there is a circuit already developed by N7LUE to do what
you're
>looking for, and I know that at least APRSdos understands the output. The
most
>recent e-mail address I can find for Robert is three years old, at
>CMPK59D@prodigy.com. I don't know if the circuit was published, but the
>board/kit he was or is selling was reviewed in the August 1995 "73" column,
>"Homing In".
>
>>This information I beleive is in the NEMA 0183 spec
>
>I don't know of any amateur-affordable ARDF systems that support NMEA0183.
The
>commerically-marketed boxes (Directional Systems and Agrelo Engineering)
which
>have serial ports each have their own way of doing things.
>
>>but whan I checked the price it was too expensive for my needs.
>
>What did you price, Chuck? Directional Systems? If so, I agree; their
product
>is usually sold in the commercial/public safety communications market and
is
>priced accordingly.
>
>However, if you feel that pricing is a problem with the Agrelo Engineering
DFjr
>(www.agrelo.com), then you might not have a complete grasp of the end cost
of
>building your own, especially when you start getting into the cost of a
BASIC
>Stamp and its development system. I have built three Roanokes or
derivatives in
>the last 20 or so years, and can attest that each and every one had an end
cost
>greater than buying a DFjr outright at $400. It's the same as building your
own
>HT - possible, but why do it when you can save time AND money and have a
better
>end result by buying the commericial version?
>

>Also, while the basic concepts have survived the 20 years relatively
unscathed,
>the PIN diode-based antenna switching harness described with the original
>Roanoke and its contemporaries has been superceded by other, much more
>effective designs.
>
>For what it's worth...
>
> ...mike/N0QBF
> 71301.3106@compuserve.com
>
>
>

868. Re: [APRSSIG:26708] Re: RDF data format

From: Ralph Fowler <rwf@BSRG.org>
Date: Thu, 30 Jul 1998 18:03:58 -0400
To: aprssig@tapr.org
Message-ID: <Version.32.19980730174946.010bfc60@ccegate.cokecce.com>
Rendered body type: text/plain

Hmmm...

The Directional Systems unit I bought is available as a kit for about
$150.00 and assembled for in the $300.00 range. It has a serial port and a
nice metal blue case.

I thought that was a very attractive price.

There's a picture of it on my APRS web page at http://BSRG.org
The switched amplifier method of antenna selection used in the Directional
Systems unit FAR surpasses that old Roanoke design for 1978!

Mike Musick wrote:

>What did you price, Chuck? Directional Systems? If so, I agree; their product
>is usually sold in the commercial/public safety communications market and is
>priced accordingly.

869. Re: [APRSSIG:26636] Re: APRS demo with "Neighborhood Night Out"

From: "Greg \"Lin\" Holcomb Jr." <glfh@localone.net>
Date: Thu, 30 Jul 1998 20:09:32 -0400
To: <wa6ylb@theworks.com>, <aprssig@tapr.org>
Message-ID: <00f801bdbc17$85d2db20$f5042299@lin>
Rendered body type: text/plain

Hmmm,
The City of Lawrenceville Ga. has GPS antennas on the trunks of the cars
and laptops inside but I feel sure that they dont TX the data over any
channels.
But what is the difference between that and telling the world their 10-20 (I
think that means location it has been a while) on VHF?
If it was in some kind of encoded format for commercial I dont see the
difference between that and the data terminals some departments use.
73
Lin
N4YCI
-----Original Message-----
From: Byron Smith <wa6ylb@theworks.com>
To: aprssig@tapr.org <aprssig@tapr.org>
Date: Tuesday, July 28, 1998 9:23 PM
Subject: [APRSSIG:26636] Re: APRS demo with "Neighborhood Night Out"

>
>>However, routine tracking of police vehicles may not be a particularly
>>good idea. Imagine the implications if someone sets up a portable
>>receiver (laptop, etc.) in their car, sits in the parking lot until all
>>of the patrol cars are several miles away, then goes and robs the bank.
>
>
>ah, this cant happen. The data the car sends out over the air is encrypted.
>You cant decode it like our APRS system is now. This is part of the
>security system that is built into mobile data terminals in police Data
>terminals. (were installing a system here now.)
>
>Byron Smith

>wa6ylb@theworks.com - Website: theworks.com/~wa6ylb
>wa6ylb@wa6ylb.#cca.ca.usa.noam
>
>If a turtle doesn't have a shell, is he homeless or naked?
>
>

870. APRS+SA v0.9.18

From: "Brent Hildebrand" <bhildebrand@earthlink.net>
Date: Thu, 30 Jul 1998 17:16:12 -0700
To: "APRSplus" <aprsplus@k8sn.org>, <aprssig@tapr.org>, <aprsnews@tapr.org>
Message-ID: <007901bdbc18$6e037800$ad01fea9@dell>
Rendered body type: text/plain

July 27, 1998
APRS+SA v0.9.18 Release Notes:
New files: aprsplus.dll, apx20ocx.dll, flshtray.ocx, regsvr32.exe.

New:
1) New map types (5-9). This map supports the Custom Map List found on the Lists page or Setup. You can enter any list of callsigns you want to appear on this map, including wildcards. Examples. KH2* will include any callsign with KH2 prefix. Or ???? would include all 4 character callsigns. *-9* Would include all callsigns with -9 SSID. And *:* would include all Objects. The new map supports its own Map Options (MOP) file.
 Maps 1-4 have not changed
 Maps 5 and 6 are supported by the Custom Map List of Setup
 Maps 7,8 and 9 included all known stations with the TimeFilter applied
Note: Map types are in evolution

2) Default Map Options file (MOP) is now MapOptions.MOP for all maps where an other MOP file is not defined.
3) Each map type can have their own Street Atlas Overlay file. This is in addition to the global overlay. To use this for of overlay, create a map file with all the drawing objects for that map you desire. Then save it with the name of the map type. For example, it Map 5 is Map5, use Map5.SA5.
4) Maps Page: Multiple maps can be selected for automatic redraw by clicking on the appropriate check boxes. Which map is automatically redrawn is rotated in time.
5) Shortcut Menu has been reworked to "shorten" it. All Map type menu items are now grouped under "Map". All TNC functions under "TNC", etc.
6) Wildcards now work properly with Tracking on the Tracking page.
7) A Tray Icon is now supported in the System Tray on some installations of Win95. This is experimental only. The Icon currently supports to menus: right click to bring up the Shortcuts Menu, left click to bring up a new Locating menu. This menu has up to 3 parts. The first it to Locate yourself, the possible second, contains callsign in the Custom Map list. The possible last list of menus contains the callsigns of stations in the Tracking List. Click on any of these menus will zoom the map to that location if the position data passes the Timefilter and Rangefilter. Note that Street Atlas can be full screen, and these menus are still available! This Tray Icon is provided by an ActiveX control, FlshIcon.OCX. This control is a freeware control. Documentation about the control is included. The control is automatically registered by Setup.exe.

Known Issues:
1) The Tray Icon is not currently supported under WinNT.

Brent Hildebrand, KH2Z

Waypoint+ v1.7.07
http://www.tapr.org/~kh2z/Waypoint

APRS+SA v0.9.17
http://www.tapr.org/~kh2z/aprsplus.

871. Re: [APRSSIG:26666] APRSdos ICON

From: "Greg \"Lin\" Holcomb Jr." <glfh@localone.net>
Date: Thu, 30 Jul 1998 20:17:54 -0400
To: <bruninga@nadn.navy.mil>, <aprssig@tapr.org>
Message-ID: <010a01bdbc18$ade7f9a0$f5042299@lin>
Rendered body type: text/plain

Bob and all.

I use dosAPRS under Win NT it uses less resources up than WinAprs.
thanks for the icon.
73 Lin

N4YCI

-----Original Message-----
From: Bob Bruninga <bruninga@nadn.navy.mil>
To: aprssig@tapr.org <aprssig@tapr.org>
Date: Wednesday, July 29, 1998 6:57 PM
Subject: [APRSSIG:26666] APRSdos ICON

>I got to playing last night and built a little icon for APRSdos to match
>my logo that you see on my web pages. If you want it, its in my tapr
>directory... as AprsDos.ico. But I guess if you are running Windows, you
>probably dont run DOS, so... oh well...
>
>
>See DAYTON97 HISTORY: http://web.usna.navy.mil/~bruninga/dayton.html
>See Maryland APRS LIVE: http://web.usna.navy.mil/~bruninga/aprs.html
>See GPS on ANY radio: http://www.tapr.org/tapr/html/mic-e.html
>
>

872. Re: WinAPRS version 2.2.1

From: Jerry Rector <jerryr@gate.net>
Date: Thu, 30 Jul 1998 20:52:10 -0400
To: "'msproul@ap.org'" <msproul@ap.org>
Cc: "'aprssig@tapr.org'" <aprssig@tapr.org>
Message-ID: <01BDBBFB.F128A4C0@JERRY>
Rendered body type: text/plain

The improved Auto-scroll with PM 3.0 works great!

Used two different PM map windows, one neighborhood street level,
one displaying the 60-mile route I traverse daily, and set both
to Auto-Scroll, no track, Auto-Refresh on my -14 stand-alone tracker.

The home station kept my tracker icon centered on both maps the whole
trip!

Thank for all the improvements!

Jerry, KB4AOM
mailto:jerryr@gate.net

Personal Web Page
http://members.tripod.com/~kb4oam

873. Re: [APRSSIG:26708] Re: RDF data format

From: Byron Smith <wa6ylb@theworks.com>
Date: Thu, 30 Jul 1998 18:40:23 -0700
To: 71301.3106@compuserve.com
Cc: aprssig@tapr.org
Message-ID: <199807310146.SAA22796@ns.theworks.com>
Rendered body type: text/plain

I guess I should have CC'd this to the SIG. Far circuits sells a board that
interfaces this orginal 1978 DF unit to APRS.
I have built one of these units and enjoy it.

At 02:22 PM 7/30/98 -0500, you wrote:
>>I am currently building a doppler RDF system that was decribed in QST
>>May 1978. I would like to interface this system to APRS but do not
>>know what format I need to place the data into.
>
>We're reaching back pretty far, Chuck... is this the original "Roanoke
Doppler"
>article? Or is it the Selim design?
>
>In either case, there is a circuit already developed by N7LUE to do what
you're
>looking for, and I know that at least APRSdos understands the output. The
most
>recent e-mail address I can find for Robert is three years old, at
>CMPK59D@prodigy.com. I don't know if the circuit was published, but the
>board/kit he was or is selling was reviewed in the August 1995 "73" column,
>"Homing In".
>

Byron Smith
wa6ylb@theworks.com - Webpage: http://www.theworks.com/~wa6ylb
wa6ylb@wa6ylb.#cca.ca.usa.noam

A truely wise man never plays leap frog with a unicorn.

874. Re: [APRSSIG:26716] Re: WinAPRS version 2.2.1

From: Wes Johnston <kd4rdb@eagnet.com>
Date: Thu, 30 Jul 1998 22:17:15 -0400
To: aprssig@tapr.org
Message-ID: <3.0.32.19980730221713.00703cc8@gena>
Rendered body type: text/plain

Transpearant ICONS.... finally!! wow!
Wes
Email: mailto:kd4rdb@eagnet.com
AlphaPager: mailto:kd4rdb@eagnet.com - subject line: PAGER
APRS: http://www.qsl.net/kd4rdb/aprs.htm

CAMPER FOR SALE: http://www.qsl.net/kd4rdb/camper.htm

875. Garmin Jump-itis

From: Jeff Brenton <jeffb@espi.com>
Date: Thu, 30 Jul 1998 22:04:52 -0500
To: aprssig <aprssig@tapr.org>
Message-ID: <35C13454.3416@espi.com>
Rendered body type: text/plain

Is it just me, or are there a LOT of Garmin GPS units giving some rather
bogus results in the last few days?

This morning, my Jeep sent out a few packets showing me moving at 507
knots across the ground. W9JBL-9 jumped from DeKalb, IL, to west of
Moline (but still hit the same digipeater!), then back in 20 minutes.

In my case, it may have been the fact that the GPS was on too long (it's
been running for close to 3 weeks), but I don't think that's the case in
in Barry's mobile...
--

Jeff Brenton, Ham Radio call KA9VNV
Questionable web page: http://www.dididahdahdidit.com
Covert supporter of the Vast Right Wing Conspiracy (tm)

876. APRS+SA v0.9.18 Patch

From: "Brent Hildebrand" <bhildebrand@earthlink.net>
Date: Thu, 30 Jul 1998 20:27:51 -0700
To: "APRSplus" <aprsplus@k8sn.org>, <aprssig@tapr.org>, <aprsnews@tapr.org>
Message-ID: <00b001bdbc33$33843be0$ad01fea9@dell>
Rendered body type: text/plain

I found one small bug in v0.9.18 that has to do with the Data page of Setup.
If you enable this, you will get a VALUE ERROR recorded in the Event Log.
I have uploaded a patch to the APRS+SA Web Site that will resolve this. You
can down load the patch from the Download page of the Web site. The file is
called Patch.zip, and it will contain the latest patches for the current
version.

Brent Hildebrand, KH2Z

Waypoint+ v1.7.07
http://www.tapr.org/~kh2z/Waypoint

APRS+SA v0.9.17
http://www.tapr.org/~kh2z/aprsplus
..

877. Re: [APRSSIG:26710] Re: KPC3 Remote control

From: Bob Bruninga <bruninga@nadn.navy.mil>
Date: Thu, 30 Jul 1998 23:58:40 -0400 (EDT)
To: Ralph Fowler <rwf@bsrg.org>
Cc: aprssig@tapr.org
Message-ID: <Pine.SOL.3.96.980730235627.27200B-100000@arctic>
Rendered body type: text/plain

On Thu, 30 Jul 1998, Ralph Fowler wrote:

> What it's worth is that now those of us with a KPC-3 can now derive a
> signal to cycle power to a crummy, hidden GPS-30 that needs a restart to
> gain lock.
>
> THANKS Bob!!!
>
> Bob wrote:
> <snip>>you can also use the POWER led as a remote
> >control line just by using the LEDS ON/OFF command...

APRSdos REPLY/COMMENT: Come to think about it, isnt one of the leads in
the cable just an on/off lead that doesnt carry the full power current?
THus you dont even need any interface, just hook it to the LED! I know in
the TRIPMATE, pin 4 is only a very low current on/off signal that could
easily be driven by the LED circuit...

I better check and see if the ON/OFF transistor is in the + or ground lead
before I say any more..

Reply mail addr: wb4apr@amsat.org
US mail address: 115 old Farm Ct, Glen Burnie, MD 21060
See DAYTON97 HISTORY: http://web.usna.navy.mil/~bruninga/dayton.html
See Maryland APRS LIVE: http://web.usna.navy.mil/~bruninga/aprs.html
See GPS on ANY radio: http://www.tapr.org/tapr/html/mic-e.html

878. Re: [APRSSIG:26721] Re: KPC3 Remote control

From: Wes Johnston <kd4rdb@eagnet.com>
Date: Fri, 31 Jul 1998 01:10:11 -0400
To: bruninga@nadn.navy.mil, aprssig@tapr.org
Message-ID: <3.0.32.19980731011009.006aa940@gena>
Rendered body type: text/plain

At 11:02 PM 7/30/98 -0500, you wrote:
>I better check and see if the ON/OFF transistor is in the + or ground lead
>before I say any more..

just checked.... the transistor Q3 switches 5volts onto the LEDs. (kpc-3)
so just hook to the ANODE side of the LEDs... that can be identified by the
COMMON buss between all the LEDs. only problem is LED's on = GPS on =
batteries die more quickly. Careful not to take more than 100ma total from
that transistor!! Hmmm.... 5 leds @ 20ma each.... oh well...

Wes
Email: mailto:kd4rdb@eagnet.com
AlphaPager: mailto:kd4rdb@eagnet.com - subject line: PAGER
APRS: http://www.qsl.net/kd4rdb/aprs.htm

CAMPER FOR SALE: http://www.qsl.net/kd4rdb/camper.htm

879. Re: [APRSSIG:26719] Garmin Jump-itis

From: Earl Needham <kd5xb@amsat.org>
Date: Fri, 31 Jul 1998 03:16:46 -0600
To: aprssig@tapr.org
Message-ID: <3.0.3.32.19980731031646.00901620@mail.pdrpip.com>
Rendered body type: text/plain

At 10:04 PM 7/30/98 -0500, Jeff Brenton sent:
>Is it just me, or are there a LOT of Garmin GPS units giving some rather
>bogus results in the last few days?

        I don't think it's just Garmin. I've been watching Peter, W7LUS-14, and
he's got an interesting triangle for a track. Covers about 7 or 8 miles on
one leg and about 13 on the other.

        Someone sneezed on the SA button? ;-)

        7 3
        Earl
Earl Needham, KD5XB   mailto:KD5XB@AMSAT.ORG
Clovis, NM (N34.403 W103.334)
Phi Mu Alpha Sinfonia, Pi Chi '76

880. Re: [APRSSIG:26723] Re: Garmin Jump-itis

From: "John B. Leonard, Jr." <jleonard@tbcnet.com>
Date: Fri, 31 Jul 1998 05:26:36 -0500
To: <kd5xb@amsat.org>, <aprssig@tapr.org>
Message-ID: <002601bdbc6d$b4b415c0$a7e070cf@s-jleo>

Rendered body type: text/plain

Funny...
I have been getting a tracker ready for a local Red Cross drill, and watched
it wander on the screen 2 blocks over a 2 hr period. And that was with the
car parked in the driveway.

jbl

J Barry Leonard/W9JBL
E-MAIL mailto:jleonard@tbcnet.com
WWW Home Page http://tbcnet.com/~jleonard/home.html
American Red Cross Disaster Services - Rockford IL Chapter

-----Original Message-----
From: Earl Needham <kd5xb@amsat.org>
To: aprssig@tapr.org <aprssig@tapr.org>
Date: Friday, July 31, 1998 4:53 AM
Subject: [APRSSIG:26723] Re: Garmin Jump-itis

>At 10:04 PM 7/30/98 -0500, Jeff Brenton sent:
>>Is it just me, or are there a LOT of Garmin GPS units giving some rather
>>bogus results in the last few days?
>
> I don't think it's just Garmin. I've been watching Peter, W7LUS-14, and
>he's got an interesting triangle for a track. Covers about 7 or 8 miles on
>one leg and about 13 on the other.
>
> Someone sneezed on the SA button? ;-)
>
> 7 3
> Earl
>Earl Needham, KD5XB   mailto:KD5XB@AMSAT.ORG
>Clovis, NM (N34.403 W103.334)
>Phi Mu Alpha Sinfonia, Pi Chi '76

881. HSP CABLE, DOES THIS WORK?

From: kd4ydc@juno.com (Robert W Burton)
Date: Fri, 31 Jul 1998 06:49:16 -0400
To: aprssig@tapr.org
Message-ID: <19980731.064923.3390.0.KD4YDC@juno.com>
Rendered body type: text/plain

This hsp cable has been built 3 or 4 times now!   I am getting almost
constant gsp
data. Don't think that it is switching. Can someone check this?
Othello.localaccess.com/nwaprs/hsp.htm
Also, on gps45, which version to use?
2.0 nmea or the 1.5??

Robert Burton
KD4YDC
AEC ARES / NWS in Peachtree City
GA SKYWARN

_____
You don't need to buy Internet access to use free Internet e-mail.
Get completely free e-mail from Juno at http://www.juno.com
Or call Juno at (800) 654-JUNO [654-5866]

882. Re: [APRSSIG:26723] Re: Garmin Jump-itis

From: Jon Ogden <jono@enteract.com>
Date: Fri, 31 Jul 98 06:20:04 -0500
To: <kd5xb@amsat.org>, <aprssig@tapr.org>
Message-ID: <199807311111.GAA13055@tapr.org>
Rendered body type: text/plain

>   Someone sneezed on the SA button? ;-)

Makes me nervous. It's always known that if we go to war or something
that the signal would be totally scrambled. Uh-oh....

Well, I don't think were going to war. Just curious why it moved that
much. I hadn't been paying any particular attention and since my power
blinked off at 5:00 this morning, I can't go replay my track from
yesterday.

73,

Jon
KE9NA

Jon Ogden
KE9NA

http://www.qsl.net/ke9na

"A life lived in fear is a life half lived."

883. Re: [APRSSIG:26726] Re: Garmin Jump-itis

From: "Richard Garcia" <k4gps@bellsouth.net>
Date: Fri, 31 Jul 1998 07:33:00 +0000
To: aprssig@tapr.org, jono@enteract.com
Message-ID: <199807311133.HAA11373@mail.mia.bellsouth.net>
Rendered body type: text/plain

I was watching my GPS speed show me at 50 MPH when I was actually
doing 33 or so last night. Scared me for a moment thinking I had a
speedometer problem but after visually confirming I could not have
been going that fast I chalked it up to SA.

Tuesday night I was standing in my driveway and it also showed I was
going 3 MPH so someone has been doing a lot of "sneezing"

> Date: Fri, 31 Jul 1998 06:12:23 -0500 (CDT)
> Reply-to: jono@enteract.com
> From: Jon Ogden <jono@enteract.com>
> To: aprssig@tapr.org
> Subject: [APRSSIG:26726] Re: Garmin Jump-itis

> >   Someone sneezed on the SA button? ;-)
>
> Makes me nervous. It's always known that if we go to war or something
> that the signal would be totally scrambled. Uh-oh....
>
> Well, I don't think were going to war. Just curious why it moved that
> much. I hadn't been paying any particular attention and since my power
> blinked off at 5:00 this morning, I can't go replay my track from
> yesterday.
>
> 73,
>
> Jon
> KE9NA
>
>
> ---
> Jon Ogden
> KE9NA
>
> http://www.qsl.net/ke9na
>
>
> "A life lived in fear is a life half lived."
>
>
>
k4gps@bellsouth.net Ex: N2CZF KA2FXA
Jupiter Farms FL.
http://aprs.florida.net
http://www.radiotronics.com

884. Re: [APRSSIG:26726] Re: Garmin Jump-itis

From: Jim Duncan <ku0g@kcaprs.org>
Date: Fri, 31 Jul 1998 07:17:47 -0500
To: "aprssig@tapr.org" <aprssig@tapr.org>
Message-ID: <35C1B5EB.81682B4A@kcaprs.org>
Rendered body type: text/plain

Jon Ogden wrote:
>

> >   Someone sneezed on the SA button? ;-)
>
> Makes me nervous. It's always known that if we go to war or something
> that the signal would be totally scrambled. Uh-oh....

Actually, if we go to war, they turn off SA altogether (due to the high
percentage of CIVILIAN GPS receivers that are in the hands of our "boys
n girls" in the trenches!

The time to worry is when you sit absolutely dead solid still according
to your GPS!

--
73 de Jim, KU0G
Chairman/Coordinator
Kansas City APRS Working Group, W0APR
Rogue Squadron Storm Chasers
Mailto:ku0g@kcaprs.org
Webpage: http://www.kcaprs.org
BorgNet: 1st of 10

885. Garmin Jump

From: Jerry K9GD <k9gd@enteract.com>
Date: Fri, 31 Jul 1998 08:27:44 -0500
To: aprssig@tapr.org
Message-ID: <199807311327.IAA27663@tapr.org>
Rendered body type: text/plain

SA Watch Statistics

· SA Watch Version 3.23 is registered to Jerry DiPietro
· SA Watch logging file: i:\program files\sa watch\sawatch.dat 33,520 bytes
· First sample: 12:52:24 31.Jul.1998 Last sample: 13:20:16 31.Jul.1998 UTC
· Elapsed time: 0:00:27:52 Logging time: 0:00:27:52 for 837 records
· Logging interval: 100%@2sec
· Sample interval is all samples yielding 836 samples
· Note: July 31, 1998 Garmin GPS III

Element Minimum Maximum Mean St Dev St Dev of Mean
Latitude 42:01:44.52N 42:01:46.56N 42:01:45.33N 0:00:00.496 0:00:00.017
Longitude 88:10:07.50W 88:10:05.64W 88:10:06.62W 0:00:00.473 0:00:00.016
Elevation 212.1m 301.0m 249.6m 18.19m 0.63m
UTM Easting 16 0403250.2 16 0403293.8 16 0403270.8 10.86m 0.38m
UTM Northing T 4653660.5 T 4653722.8 T 4653685.2 15.33m 0.53m
2D Position 18.79m 0.65m
3D Position 26.16m 0.90m
EPE 14.8 19.9 15.61
HDOP 0.9 2.2 1.01
SVs Tracking 5 9 8.56

SA Watch is Copyright©1997-1998 SRHuntting, Inc. http://www.sni.net/kawin

Ran SA Watch this am. SA error looks low today.
Jerry
K9GD

Jerry
K9GD

Looking for an exciting entree into the
electronics/computer/telecommunication fields
CONTACT: The DeVry Guy
 devryguy@juno.com
ICQ# 329754

886. RE: [APRSSIG:26692] FW: KPC 3. Ver 8.3- ????

From: Skip Allison-CFAD07 <Skip_Allison-CFAD07@email.mot.com>
Date: Fri, 31 Jul 1998 8:39:18 -0500
To: aprssig@tapr.org
Message-ID: <"Macintosh */PRMD=MOT/ADMD=MOT/C=US/"@MHS>
Rendered body type: text/plain

To: APRS SIG
From: Allison-CFAD07 Skip on Fri, Jul 31, 1998 8:35 AM
Subject: RE: [APRSSIG:26692] FW: KPC 3. Ver 8.3- ????

Yes. I haven't done this yet, but I think I'll just add a 4 inch long 2
conductor cable to the radio connector that plugs into the KPC3+ radio port
and run it to a DB25. Then just plug the cable from the GPS receiver into

that instead of the KPC3.

Skip
_____
__
To: Allison-CFAD07 Skip
From: mwwebb@cyberport.net@INTERNET on Jul 30, 1998 19:50
Subject: Re: [APRSSIG:26692] FW: KPC 3. Ver 8.3- ????

Don't you need to fabricate some type of "y" cable so the radio and gps can
physically share the port??

-----Original Message-----
From: Skip Allison-CFAD07 <Skip_Allison-CFAD07@email.mot.com>
To: aprssig@tapr.org <aprssig@tapr.org>
Date: Thursday, July 30, 1998 10:00 AM
Subject: [APRSSIG:26692] FW: KPC 3. Ver 8.3- ????

>To: APRS SIG
>From: Allison-CFAD07 Skip on Thu, Jul 30, 1998 10:26 AM
>Subject: FW: [APRSSIG:26673] KPC 3. Ver 8.3- ????
>
>
>_____
__
>__
>To: aprssig@tapr.org@INTERNET
>From: mwwebb@cyberport.net@INTERNET on Jul 29, 1998 21:56
>Subject: [APRSSIG:26673] KPC 3. Ver 8.3- ????
>
>I have a KPC 3+ ver 8.2.
>
>I do not get the hipe on the ver 8.3. Just because you have a second
>firmware port does not do you any good if you do not have a hardware port
to
>plug into.
>
>The tnc has two ports- one to the computer and one to the radio. How does
>the firmware upgrade help in connecting another device??
>
>----------
--
>--
>
>The GPS receiver connects to one of the pins on the radio port (well, 2 if
>you count ground). So the radio connector is like 2 connectors in one.
>This is great because with this setup, you don't need an HSP cable or 2
>ports on the computer. I'm saving my pennies to replace my KPC3 with a 3+.
>
>Skip
>K9SA
>
>

887. Tracker Batteries

From: Bob Bruninga <bruninga@nadn.navy.mil>
Date: Fri, 31 Jul 1998 09:55:47 -0400 (EDT)
To: aprssig@tapr.org
Message-ID: <Pine.SOL.3.96.980731094948.23813D-100000@arctic>
Rendered body type: text/plain

Being dismayed, standing at the Battery rack at the store, and seeing the
plethora of batteries and prices, I always wondered if there was a
difference in life for Duracell and Energizer's. Always keep saying some
day Im gonna do a test.

Shucks! Just buy some of each, but half and half in your GPS unit and
then when the batteries go dead, measure which brand is worse than the
other!

Today, I noticed that RAOVAC were 2/3rds of what the others cost, so I
bought them to add to the test.

One thing for certain, there is a 100% markup or higher on batteries as
luxury items so shopping around does payoff.. Now, the question is bang
for the buck. If they have a good battery, WHY NOT PUT THE AMP-HOURS on
the package and stand behind it!   Grrrr...

888. Re: [APRSSIG:26721] Re: KPC3 Remote control

From: Bob Bruninga <bruninga@nadn.navy.mil>
Date: Fri, 31 Jul 1998 10:02:40 -0400 (EDT)
To: Wes Johnston <kd4rdb@eagnet.com>
Cc: aprssig@tapr.org
Message-ID: <Pine.SOL.3.96.980731095725.23813E-100000@arctic>
Rendered body type: text/plain

On Fri, 31 Jul 1998, Wes Johnston wrote about using KPC-3 LEDS as a remote control function:

> just checked.... the transistor Q3 switches 5volts onto the LEDs. (kpc-3)
> so just hook to the ANODE side of the LEDs... that can be identified by the
> COMMON buss between all the LEDs. only problem is LED's on = GPS on =
> batteries die more quickly. Careful not to take more than 100ma total from
> that transistor!! Hmmm.... 5 leds @ 20ma each.... oh well...

APRSdos REPLY/COMMENT: Ah, I measured mine, and the power LED draws 2 Ma, not 20. THus the savings between LEDS on and LEDS off is only the difference between 18ma and 16 ma. (only a 12% improvement in battery life). One may argue that that is only for one LED, but then again, only one LED is on 98% of the time, so any current drain of the others adds nothing to the calculation.

But I agree, that you should not plan on getting any POWER out of that transistor, only use it as a low power switch...

Reply mail addr: wb4apr@amsat.org
US mail address: 115 old Farm Ct, Glen Burnie, MD 21060
See DAYTON97 HISTORY: http://web.usna.navy.mil/~bruninga/dayton.html
See Maryland APRS LIVE: http://web.usna.navy.mil/~bruninga/aprs.html
See GPS on ANY radio: http://www.tapr.org/tapr/html/mic-e.html

889. Re: Garmin Jump-itis

From: n1rhl@juno.com
Date: Fri, 31 Jul 1998 10:22:53 -0400
To: aprssig@tapr.org
Message-ID: <19980731.102254.27614.0.n1rhl@juno.com>
Rendered body type: text/plain

Jeff Goldbloom told me that he has figured out this SA problem and it's not the real SA. Someone is using the GPS satellites as some kind of timer. He told me that all that is necessary to stop this is get a mac powerbook and upload a virus to whom ever is doing this then the problem will stop....
Tune your HF rigs to 75meters and wait to hear the cw instructions ....

Dadididit dididit
(didididit didit   didididit didit)

On Fri, 31 Jul 1998 06:12:07 -0500 (CDT) Jon Ogden <jono@enteract.com> writes:
>>   Someone sneezed on the SA button? ;-)
>
>Makes me nervous. It's always known that if we go to war or something
>
>that the signal would be totally scrambled. Uh-oh....
>
>Well, I don't think were going to war. Just curious why it moved that
>
>much. I hadn't been paying any particular attention and since my
>power
>blinked off at 5:00 this morning, I can't go replay my track from
>yesterday.
>
>73,
>
>Jon
>KE9NA
>
>
>-------------------------------------
>Jon Ogden
>KE9NA
>
>http://www.qsl.net/ke9na
>
>
>"A life lived in fear is a life half lived."

>
>

_____
You don't need to buy Internet access to use free Internet e-mail.
Get completely free e-mail from Juno at http://www.juno.com
Or call Juno at (800) 654-JUNO [654-5866]

890. Re: [APRSSIG:26731] Tracker Batteries

From: Jeff Brenton <jeffb@espi.com>
Date: Fri, 31 Jul 1998 09:29:13 -0500
To: bruninga@nadn.navy.mil
Cc: aprssig <aprssig@tapr.org>
Message-ID: <35C1D4B9.82@espi.com>
Rendered body type: text/plain

I have found that, for most of the uses I have for batteries, Eveready Energizers gave better life than Duracells. For other things, Duracell is better. That said, however... Duracell does one thing that Eveready doesn't do - print the "use through" date *on the battery*.

Why is this important? In aviation, there have been a number of devices, particularly Emergency Locating Transmitters, built around the idea of D-size alkaline batteries, rather than proprietary packs. This lowers the cost of periodic replacement from the normal $35+ every 24 months (some packs are over $250!) to a $10 purchase at the local store. But, the batteries MUST have the date printed on them.... so Eveready cells can't be used!

I bought one of these ELTs for the plane I recently sold. It replaced a perfectly good ELT that used a $40 battery pack. The Duracells were good for 5 years, legally; my plan was to replace them annually, and use the old ones for the flashlight in the plane. Sold the plane before that happened, though...

I will say, however, that I am currently buying only Duracells. Why? Price, particularly, and packaging. The local Farm & Fleet sells them in 8- and 12-packs (depending upon size), at 10% less than most other stores. They don't sell Eveready, but they do sell Ray-O-Vac. So, even when the Eveready cells last longer, the cost-effective solution is Duracells!
--

Jeff Brenton, Ham radio call KA9VNV
http://www.espi.com
Questionable web page: http://www.dididahdahdidit.com
Covert supporter of the Vast Right Wing Conspiracy (tm)

891. WinAPRS tracks the Energizer Bunny

From: Mark Sproul <msproul@ap.org>
Date: Fri, 31 Jul 1998 10:26:43 -0400
To: aprssig@tapr.org
Message-ID: <v03110705b1e7833394ad@[165.1.27.20]>
Rendered body type: text/plain

At the New Jersey Festival of Ballooning held July 24-26th 1998 in Readington NJ, WinAPRS was used to track the Energizer Bunny Balloon.

A tracker box was placed on board the balloon and WinAPRS was run on a laptop in a chase vehicle. The chase vehicle was also equiped with a GPS so the ground crew new at all times where the ballon was and where they were with respect to the balloon. The maps provided information as to the best way to get to where the ballon was and the track of the balloon helped to predict where the balloon was heading allowing for the ground crew to get ahead of the balloon.

Mark and Keith Sproul, along with their wives, Carol and Debbie got to help in launching and packing of the balloon. The balloon itself, without the basket weighs 1100 pounds. Mark and Debbie each got to ride in the balloon.

Go to this web site for pictures

http://aprs.rutgers.edu/bunny/

Mark

_____

```
Mark Sproul                      |Amateur Radio: KB2ICI
Software Engineer @ Assoc Press  |
msproul@ap.org                   |Work: 609-860-7120
North Brunswick, NJ              |Fax:  609-860-7129
http://msproul.rutgers.edu/
_____________________________________________________________________________
```

892. Re: [APRSSIG:26731] Tracker Batteries

From: Stephen Vinson <kd4wiw@ipass.net>
Date: Fri, 31 Jul 1998 10:47:18 -0700
To: bruninga@nadn.navy.mil
Cc: aprssig@tapr.org
Message-ID: <35C20325.3B94@ipass.net>
Rendered body type: text/plain

Bob Bruninga wrote:
>
> Being dismayed, standing at the Battery rack at the store, and seeing the
> plethora of batteries and prices, I always wondered if there was a
> difference in life for Duracell and Energizer's. Always keep saying some
> day Im gonna do a test.
>
> Shucks! Just buy some of each, but half and half in your GPS unit and
> then when the batteries go dead, measure which brand is worse than the
> other!
>
> Today, I noticed that RAOVAC were 2/3rds of what the others cost, so I
> bought them to add to the test.
>
> One thing for certain, there is a 100% markup or higher on batteries as
> luxury items so shopping around does payoff.. Now, the question is bang
> for the buck. If they have a good battery, WHY NOT PUT THE AMP-HOURS on
> the package and stand behind it!   Grrrr...

Bob ... Consumer Digiest did a spill on Alkaline batteries and their
life. The results were that some variance between lots but on a whole
all lasted approximately the same ... they recommended going with price.
My personal experience is to monitor cheaper batteries as they get
weaker and not used as much for leakage.

Steve
KD4WIW
--
```
==========================================
E-mail:   kd4wiw@ipass.net
Home Page:  http://www.ipass.net/~kd4wiw
Packet:  KD4WIW@W4RAL.#RTP.NC.USA.NOAM
==========================================
       TOWERS ARE BEAUTIFUL !!!!
==========================================
```

893. Re: [APRSSIG:26731] Tracker Batteries

From: "O.C. Winton wn1z" <wn1z@sojourner.wn1z.ampr.org>
Date: Fri, 31 Jul 1998 07:46:25 -0700
To: bruninga@nadn.navy.mil, aprssig@tapr.org
Message-ID: <7133@babylon.wn1z.ampr.org>
Rendered body type: text/plain

At 08:56 AM 7/31/98 -0500, Bob Bruninga wrote:
>for the buck. If they have a good battery, WHY NOT PUT THE AMP-HOURS on
>the package and stand behind it!   Grrrr...
>

What i have heard (don't have the hard copy to document this)
is that the AH capacity of alkalines varies greatly depending
on the rate at which you draw current.

According to this hearsay, an alkaline D cell, if you draw only
50 mA and only sporadically, will give something like 15 AH.
I couldn't believe that at first; someone else may be able to
back this up or debunk it.

On the other hand, at higher current draws, you will get much
much less than this.

Orrin wn1z
in foggy Monterey CA

894. Re: Tracker Batteries

From: Joe Foor <kf4dys@wfeca.net>
Date: Fri, 31 Jul 1998 10:07:56 -0500
To: aprssig@tapr.org
Message-ID: <3.0.5.32.19980731100756.0079fc90@pop.wfeca.net>
Rendered body type: text/plain

I've seen results from several tests and they pretty much agree that there isn't a big difference between brands of Alkaline cells, so the cheapest is usually the best way to go.

One other thing I have seen discussed is the terminal corrosion problem, associated with Duracells. Apparently, the terminals in many battery holders tend to corrode, over the long term. This happens even without any leakage from the batteries and may be due to a dissimiliar metal used in the "copper top" alloy.

regards,
Joe kf4dys

At 08:56 AM 7/31/98 -0500, Bob wrote:
>Being dismayed, standing at the Battery rack at the store, and seeing the
>plethora of batteries and prices, I always wondered if there was a
>difference in life for Duracell and Energizer's. Always keep saying some
>day Im gonna do a test.
>

895. Good/Thin wire

From: Bob Bruninga <bruninga@nadn.navy.mil>
Date: Fri, 31 Jul 1998 11:28:51 -0400 (EDT)
To: aprssig@tapr.org
Message-ID: <Pine.SOL.3.96.980731112441.13050A-100000@arctic>
Rendered body type: text/plain

If you need a nice thin flexible multi conductor stranded wire for your tracker or portable TNC/Laptop, I have found the best source is dead mice.

I hope I'm not wearing out my welcome with these little tips, but it has always been frustrating to me that I have NEVER been able to find a source of such thin, flexible multiconductor cable for all my packet projects. I even tried ordering some from NEWARK Wire-N-Cable. Their reply was that all that stuff is made in Japan for counsumer items and they dont carry it.

THus, I collect old MICE from hamfests and get a free DB-9 connector to boot! Plus you just cannot beat this stuff for lightness and flexibility...

WB4APR, Bob

896. Re: [APRSSIG:26726] Re: Garmin Jump-itis

From: Jon Ogden <jono@enteract.com>
Date: Fri, 31 Jul 98 10:36:53 -0500
To: <k4gps@bellsouth.net>, <aprssig@tapr.org>
Message-ID: <199807311533.KAA06163@tapr.org>
Rendered body type: text/plain

>
>Tuesday night I was standing in my driveway and it also showed I was
>going 3 MPH so someone has been doing a lot of "sneezing"

That's normal. I see that all the time. Typical SA.

73,

Jon
KE9NA

Jon Ogden

jono@enteract.com
www.qsl.net/ke9na

"A life lived in fear is a life half lived."

897. Re: RDF data format

From: Mike Musick <71301.3106@compuserve.com>
Date: Fri, 31 Jul 1998 11:34:39 -0400
To: Blind.Copy.Receiver@compuserve.com
Message-ID: <199807311137_MC2-54B1-BCA2@compuserve.com>
Rendered body type: text/plain

Ralph sez:

>The Directional Systems unit I bought is available as a kit for about
>$150.00 and assembled for in the $300.00 range. It has a serial port and a
>nice metal blue case.
>
>I thought that was a very attractive price.

Ralph is right. "Directional Systems" stuck in my mind for some reason, but
what I meant was a similarly-named company (Doppler Systems, Inc.) that has
marketed a ready-built design for many years to both the amateur and commercial
two-way markets. The Doppler Systems box is over $1K after adding the serial
port option, and even at that the design is pretty dog-eared, being roughly the
same vintage as the Roanoke.

Doppler Systems frequently advertises in ham magazines, so it's not a stretch
to think that somebody might try them first.

The N7LUE APRS interface information is available at:

  http://members.aol.com/joek0ov/dopp2aprs.html

and like Byron mentioned, the board is available from Far Circuits.

This all said, I still recommend the DFjr as the best bang for the buck.

  ...mike/N0QBF
     71301.3106@compuserve.com

898. Re: [APRSSIG:26728] Re: Garmin Jump-itis

From: Jon Ogden <jono@enteract.com>
Date: Fri, 31 Jul 98 10:43:09 -0500
To: <ku0g@kcaprs.org>, <aprssig@tapr.org>
Message-ID: <199807311540.KAA06379@tapr.org>
Rendered body type: text/plain

>Actually, if we go to war, they turn off SA altogether (due to the high
>percentage of CIVILIAN GPS receivers that are in the hands of our "boys
>n girls" in the trenches!
>
>The time to worry is when you sit absolutely dead solid still according
>to your GPS!

Actually, I don't think this is accurate. The reason is that for one,
most (not all though) military equipment now has the military GPS. For
two, we would we want to allow our enemy to have accurate positioning
data as well. We would want to scramble it big time so they couldn't
have accurate positioning on any of their guidance systems.

Things such as artillery shells even have GPS now. They launch the
things at a specified destination. Once in free fall, fins pop out to
"steer" the shell to the cooridnates specified by the internal GPS.

So.....if we were at war and an enemy has these kind of shells, why would
we enable it to make it easy for them to hit us.

Don't think so.

During the Gulf War, lots of civilian units were in use, but that was
because GPS was relatively "new" back then.

73,

Jon
KE9NA

Jon Ogden

jono@enteract.com
www.qsl.net/ke9na

"A life lived in fear is a life half lived."

899. Re: [APRSSIG:26734] Re: Tracker Batteries

From: Jon Ogden <jono@enteract.com>
Date: Fri, 31 Jul 98 10:46:23 -0500
To: "Jeff Brenton" <jeffb@espi.com>, <aprssig@tapr.org>
Message-ID: <199807311543.KAA06522@tapr.org>
Rendered body type: text/plain

>I have found that, for most of the uses I have for batteries, Eveready
>Energizers gave better life than Duracells. For other things, Duracell
>is better. That said, however... Duracell does one thing that Eveready
>doesn't do - print the "use through" date *on the battery*.

IMHO, Duracell is FAR better than Engergizer. Energizer does have
Lithium batteries (Duracell might too). These are really light and last
much longer than Alkalines. Quite a bit more expensive too though.

73,

Jon
KE9NA

Jon Ogden

jono@enteract.com
www.qsl.net/ke9na

"A life lived in fear is a life half lived."

900. Re: [APRSSIG:26736] Re: Tracker Batteries

From: Jon Ogden <jono@enteract.com>
Date: Fri, 31 Jul 98 10:50:12 -0500
To: <kd4wiw@ipass.net>, <aprssig@tapr.org>
Message-ID: <199807311547.KAA06723@tapr.org>
Rendered body type: text/plain

>Consumer Digiest did a spill on Alkaline batteries and their
>life. The results were that some variance between lots but on a whole
>all lasted approximately the same ... they recommended going with price.

I HATE Consumer Reports, Consumer Digest, etc. They always pick the
garbage over the good stuff. They'll tell you a Sony CD player is not
any better than a cheapo Samsung or similar and that the Sony isn't worth
the price. Well, obviously they haven't tried the "bang" test. Smack
your hand on top of the Sony and see if it skips. Do the same with the
cheap brands. You tell me.

So I don't believe anything they claim.

These consumer groups also claim SUVs kill. Hey - it ain't my problem.
Don't buy a Yugo!

I hate those consumer groups!

73,

Jon
KE9NA

Jon Ogden

jono@enteract.com
www.qsl.net/ke9na

"A life lived in fear is a life half lived."

901. FW: [APRSSIG:26735] WinAPRS tracks the Energizer Bunny

From: Skip Allison-CFAD07 <Skip_Allison-CFAD07@email.mot.com>
Date: Fri, 31 Jul 1998 10:49:38 -0500
To: aprssig@tapr.org
Message-ID: <"Macintosh */PRMD=MOT/ADMD=MOT/C=US/"@MHS>
Rendered body type: text/plain

To: APRS SIG
From: Allison-CFAD07 Skip on Fri, Jul 31, 1998 10:42 AM
Subject: FW: [APRSSIG:26735] WinAPRS tracks the Energizer Bunny

>At the New Jersey Festival of Ballooning held July 24-26th 1998 in
>Readington NJ, WinAPRS was used to track the Energizer Bunny Balloon.

Is there a bunny icon?

902. Re: [APRSSIG:26745] FW: WinAPRS tracks the Energizer Bunny

From: Mark Sproul <msproul@ap.org>
Date: Fri, 31 Jul 1998 12:09:53 -0400
To: Skip_Allison-CFAD07@email.mot.com, aprssig@tapr.org
Message-ID: <v03110705b1e79cbb1e1d@[165.1.27.20]>
Rendered body type: text/plain

At 11:54 AM -0400 7/31/98, Skip Allison-CFAD07 wrote:
>To: APRS SIG
>From: Allison-CFAD07 Skip on Fri, Jul 31, 1998 10:42 AM
>Subject: FW: [APRSSIG:26735] WinAPRS tracks the Energizer Bunny
>
>
>
>>At the New Jersey Festival of Ballooning held July 24-26th 1998 in
>>Readington NJ, WinAPRS was used to track the Energizer Bunny Balloon.
>
>Is there a bunny icon?

We have one but dont know where to put in in the list.

Mark

_____
Mark Sproul |
Software Engineer @ Assoc Press |Work: 609-860-7120
msproul@ap.org |Fax: 609-860-7129
_____

903. Away for 2 weeks

From: Mark Sproul <msproul@ap.org>
Date: Fri, 31 Jul 1998 12:12:35 -0400
To: aprssig@tapr.org
Message-ID: <v03110706b1e79ce5280e@[165.1.27.20]>
Rendered body type: text/plain

I will be away from Email for 2 weeks, if you need anything you can contact
Keith or I hope to be on APRS, I will be in northern Ohio, KB2ICI-7. If
all works well, it will be on the air all of the time and should be close
enough to an IGate to get messages.

Mark

_____
Mark Sproul |
Software Engineer @ Assoc Press |Work: 609-860-7120
msproul@ap.org |Fax: 609-860-7129
_____

904. Re: [APRSSIG:26737] Re: Tracker Batteries

From: LYN <designserv@ipass.net>
Date: Fri, 31 Jul 1998 11:29:55 -0400
To: wn1z@sojourner.wn1z.ampr.org
Cc: aprssig@tapr.org
Message-ID: <35C1E2F3.2A020978@ipass.net>
Rendered body type: text/plain

O.C. Winton wn1z wrote:

> What i have heard (don't have the hard copy to document this)
> is that the AH capacity of alkalines varies greatly depending
> on the rate at which you draw current.
>
> According to this hearsay, an alkaline D cell, if you draw only
> 50 mA and only sporadically, will give something like 15 AH.
> I couldn't believe that at first; someone else may be able to

> back this up or debunk it.
>
> On the other hand, at higher current draws, you will get much
> much less than this.

This is entirely believable even though I am not personally that
familiar with alkaline batteries, because I am very familiar with
lead-acid batteries and know it to be quite true for lead-acid
batteries. Batteries have an internal resistance. Drawing
higher currents through the internal resistance dissipates some
energy in the internal resistance as heat. Drawing less
current dissipates less energy as heat, leaving more energy
to be available later.

Also in lead-acid batteries, the life time of a battery is closely
related to the percentage of discharge. For example, a given
"12V" lead-acid battery may be good for 350 charge/discharge
cycles if each discharge is to 50% of capacity, while the same
model of battery may be good for 2000 or more charge/discharge
cycles if the percentage of discharge is only about 5%. This is
due to the physics involved. During discharge, lead is converted
to lead sulfate, which has a different crystal size. Naturally, large
crystals replacing small crystals tends to crack and distort structures.
So keeping the percentage of discharge small minimizes the
structural damage.

OOPs. Sorry for the rambling.

Lyn, W4WDN

905. Re: [APRSSIG:26728] Re: Garmin Jump-itis

From: John W Wilson <z004391b@bc.seflin.org>
Date: Fri, 31 Jul 1998 12:47:22 -0400 (EDT)
To: Jim Duncan <ku0g@kcaprs.org>
Cc: aprssig@tapr.org
Message-ID: <Pine.3.89.9807311210.A21683-0100000@bc.seflin.org>
Rendered body type: text/plain

I heard that they turned off SA during the Gulf war because they hadn't
gotten their military style GPS units in place. I would expect that they
will not turn off the SA if another conflict occurs now that they have
had several years to get their acts together.

John W. Wilson, KN4HX
z004391b@bcfreenet.seflin.lib.fl.us

On Fri, 31 Jul 1998, Jim Duncan wrote:

> Jon Ogden wrote:
> >
> > >   Someone sneezed on the SA button? ;-)
> >
> > Makes me nervous. It's always known that if we go to war or something
> > that the signal would be totally scrambled. Uh-oh....
>
> Actually, if we go to war, they turn off SA altogether (due to the high
> percentage of CIVILIAN GPS receivers that are in the hands of our "boys
> n girls" in the trenches!
>
> The time to worry is when you sit absolutely dead solid still according
> to your GPS!
>
> --
> 73 de Jim, KU0G
> Chairman/Coordinator
> Kansas City APRS Working Group, W0APR
> Rogue Squadron Storm Chasers
> Mailto:ku0g@kcaprs.org
> Webpage: http://www.kcaprs.org
> BorgNet: 1st of 10
>

906. FW: [APRSSIG:26744] Re: Tracker Batteries

From: Skip Allison-CFAD07 <Skip_Allison-CFAD07@email.mot.com>
Date: Fri, 31 Jul 1998 11:46:09 -0500
To: aprssig@tapr.org

Message-ID: <"Macintosh */PRMD=MOT/ADMD=MOT/C=US/"@MHS>
Rendered body type: text/plain

To: APRS SIG
From: Allison-CFAD07 Skip on Fri, Jul 31, 1998 11:40 AM
Subject: FW: [APRSSIG:26744] Re: Tracker Batteries

I aggree! I think Consumer Reports gets paid off by the companies it's
reviewing. I've seen absolute garbage that they rate as real good.
I wonder if they've ever rated GPS receivers??

Skip
K9SA

_____
To: aprssig@tapr.org@INTERNET
From: jono@enteract.com@INTERNET on Jul 31, 1998 11:25
Subject: [APRSSIG:26744] Re: Tracker Batteries

>Consumer Digiest did a spill on Alkaline batteries and their
>life. The results were that some variance between lots but on a whole
>all lasted approximately the same ... they recommended going with price.

I HATE Consumer Reports, Consumer Digest, etc. They always pick the
garbage over the good stuff. They'll tell you a Sony CD player is not
any better than a cheapo Samsung or similar and that the Sony isn't worth
the price. Well, obviously they haven't tried the "bang" test. Smack
your hand on top of the Sony and see if it skips. Do the same with the
cheap brands. You tell me.

So I don't believe anything they claim.

These consumer groups also claim SUVs kill. Hey - it ain't my problem.
Don't buy a Yugo!

I hate those consumer groups!

73,

Jon
KE9NA

Jon Ogden

jono@enteract.com
www.qsl.net/ke9na

"A life lived in fear is a life half lived."

907. Tracker/GPS batteries

From: Jeff Reinhardt <jreinh@ix.netcom.com>
Date: Fri, 31 Jul 1998 09:53:49 -0700
To: aprssig@tapr.org
Message-ID: <35C1F69D.35AD@ix.netcom.com>
Rendered body type: text/plain

I'll weigh in with a battery subject that has yet to be mentioned:

I use the Ray-O-Vac RENEWAL rechargeable Alkalines. Have been using them
for nearly 3 years. A bit more expensive on the front side (plus the
purchase of a charger) but I have been able to get a few years out
of the batteries when you treat them well. (I date them with a marking
pen when putting them in service). They also have a VERY long shelf
life.

Unlike NiCd batteries, these batteries thrive on frequent recharging.
DO NOT let them go flat and the user will achieve a very long life
from them. I have them in use in a Garmin GPS, Alinco DJ-S41 radios and
I have two kids who are constantly using Walkman/Discman entertainment
units.

The AA, C and D size batteries work very well. I'm not impressed with
the AAA size at all. They never made a RENEWAL 9v battery, which is too
bad.

73,
Jeff Reinhardt AA6JR

908. Re: [APRSSIG:26731] Tracker Batteries

From: John W Wilson <z004391b@bc.seflin.org>
Date: Fri, 31 Jul 1998 12:51:31 -0400 (EDT)
To: Bob Bruninga <bruninga@nadn.navy.mil>
Cc: aprssig@tapr.org
Message-ID: <Pine.3.89.9807311222.B21683-0100000@bc.seflin.org>
Rendered body type: text/plain

I understood that one of the two major companies advertised longer life
over lower current use then the other.

John W. Wilson, KN4HX
z004391b@bcfreenet.seflin.lib.fl.us

On Fri, 31 Jul 1998, Bob Bruninga wrote:

> Being dismayed, standing at the Battery rack at the store, and seeing the
> plethora of batteries and prices, I always wondered if there was a
> difference in life for Duracell and Energizer's. Always keep saying some
> day Im gonna do a test.
>
> Shucks! Just buy some of each, but half and half in your GPS unit and
> then when the batteries go dead, measure which brand is worse than the
> other!
>
> Today, I noticed that RAOVAC were 2/3rds of what the others cost, so I
> bought them to add to the test.
>
> One thing for certain, there is a 100% markup or higher on batteries as
> luxury items so shopping around does payoff.. Now, the question is bang
> for the buck. If they have a good battery, WHY NOT PUT THE AMP-HOURS on
> the package and stand behind it!   Grrrr...
>

909. Re: [APRSSIG:26736] Re: Tracker Batteries

From: Earl Needham <kd5xb@amsat.org>
Date: Fri, 31 Jul 1998 11:19:36 -0600
To: aprssig@tapr.org
Message-ID: <3.0.3.32.19980731111936.009a22e0@mail.pdrpip.com>
Rendered body type: text/plain

At 09:46 AM 7/31/98 -0500, Stephen Vinson sent:
<snip>
>Bob ... Consumer Digiest did a spill on Alkaline batteries and their
>life. The results were that some variance between lots but on a whole
>all lasted approximately the same ... they recommended going with price.
>My personal experience is to monitor cheaper batteries as they get
>weaker and not used as much for leakage.

        Not to start an off-topic thread, but Consumer Reports is the same outfit
that marks bicycles "NOT RECOMMENDED" if the front brake is powerful enough
to either skid the tire or pick the rear tire up in a panic stop. After
actually seeing this in print, it's doubtful I'll EVER trust CR again.

        7 3
        Earl

Earl Needham, KD5XB   mailto:KD5XB@AMSAT.ORG
Clovis, New Mexico   DM84 N34.403 W103.334

910. Re: [APRSSIG:26731] Tracker Batteries

From: William Nolle <wa8inz@airnet.net>
Date: Fri, 31 Jul 1998 12:41:57 -0500
To: APRSsig <aprssig@tapr.org>
Message-ID: <35C201E5.7C288E6D@airnet.net>
Rendered body type: text/plain

Bob Bruninga wrote:

> Being dismayed, standing at the Battery rack at the store, and seeing the
> plethora of batteries and prices, I always wondered if there was a
> difference in life for Duracell and Energizer's. Always keep saying some
> day Im gonna do a test.

> This may give you some insight to what battery is better. I bought some
> Duracells and some Energizers for my Nikon CP900 digital camera and the

> Energizers lasted twice as long as the Duracells, I will never buy another
> Duracell!.

--
Bill Nolle wa8inz
wa8inz@airnet.net
wa8inz@amsat.org
Hazel Green, AL

Check out my Porta-Digi: http://www.airnet.net/wa8inz

911. RE: [APRSSIG:26744] Re: Tracker Batteries

From: "Philip Smith" <pksmith@computerland.net>
Date: Fri, 31 Jul 1998 12:52:35 -0500
To: "APRS SIG" <aprssig@tapr.org>
Message-ID: <000301bdbcac$026656a0$067d1dce@phil>
Rendered body type: text/plain

Jon,

Why beat around the bush? Tell us what you really think about consumer
groups :-)

-Phil
WB5QMF

> I HATE Consumer Reports, Consumer Digest, etc. They always pick the
> garbage over the good stuff. They'll tell you a Sony CD player is not
> any better than a cheapo Samsung or similar and that the Sony isn't worth
> the price. Well, obviously they haven't tried the "bang" test. Smack
> your hand on top of the Sony and see if it skips. Do the same with the
> cheap brands. You tell me.
>
> So I don't believe anything they claim.
>
> These consumer groups also claim SUVs kill. Hey - it ain't my problem.
> Don't buy a Yugo!
>
> I hate those consumer groups!
>
> 73,
>
> Jon
> KE9NA
>
>
> --
> Jon Ogden
>
> jono@enteract.com
> www.qsl.net/ke9na
>
> "A life lived in fear is a life half lived."
>

912. W7LUS-14 route

From: Joe Loewy <jloewy@wncnet.net>
Date: Fri, 31 Jul 1998 14:07:45 -0400
To: "aprssig@tapr.org" <aprssig@tapr.org>
Message-ID: <35C207F0.6A056A4A@wncnet.net>
Rendered body type: text/plain

>From Peter:

FOR THE SIG: I-90, I-80, I-76, I-70, I-15, and I-10.

913. Re: [APRSSIG:26725] HSP CABLE, DOES THIS WORK?

From: Byron Smith <wa6ylb@theworks.com>
Date: Fri, 31 Jul 1998 10:58:07
To: kd4ydc@juno.com
Cc: aprssig@tapr.org
Message-ID: <3.0.1.16.19980731105807.29cf355a@theworks.com>
Rendered body type: text/plain

Dude - its not the cable, its the inability of APRSdos to
accept this amount of data from the garmin. If the number of out put lines
were
reduced, or at least only one line was selected, then APRSdos wont choke on
them. FWIW, APRSdos using two serial ports doesnt choke.

At 05:52 AM 7/31/98 -0500, you wrote:
>This hsp cable has been built 3 or 4 times now! I am getting almost
>constant gsp
>data. Don't think that it is switching. Can someone check this?
>Othello.localaccess.com/nwaprs/hsp.htm
>Also, on gps45, which version to use?
>2.0 nmea or the 1.5??
>
>Robert Burton
>KD4YDC
>AEC ARES / NWS in Peachtree City
>GA SKYWARN
>
>_____
>You don't need to buy Internet access to use free Internet e-mail.
>Get completely free e-mail from Juno at http://www.juno.com
>Or call Juno at (800) 654-JUNO [654-5866]
>
>
Byron Smith
wa6ylb@theworks.com - Website: theworks.com/~wa6ylb
wa6ylb@wa6ylb.#cca.ca.usa.noam

If a turtle doesn't have a shell, is he homeless or naked?

914. Re: [APRSSIG:26739] Good/Thin wire

From: "David VanHorn" <dvanhorn@cedar.net>
Date: Fri, 31 Jul 1998 13:18:02 -0500
To: <bruninga@nadn.navy.mil>, <aprssig@tapr.org>
Message-ID: <002501bdbcaf$93c371c0$a9f135ce@xenu>
Rendered body type: text/plain

>I hope I'm not wearing out my welcome with these little tips,

Not possible!

>THus, I collect old MICE from hamfests and get a free DB-9 connector to
>boot! Plus you just cannot beat this stuff for lightness and
>flexibility...

I'm ashamed to say I hadn't thought of it yet! :) I've got a computerfest
coming up soon too.

915. Re: [APRSSIG:26742] Re: Garmin Jump-itis

From: "Paul Christenson" <n3eop@hotmail.com>
Date: Fri, 31 Jul 1998 11:33:16 PDT
To: aprssig@tapr.org
Message-ID: <19980731183317.22266.qmail@hotmail.com>
Rendered body type: text/plain

>Things such as artillery shells even have GPS now. They launch the
>things at a specified destination. Once in free fall, fins pop out
>to "steer" the shell to the cooridnates specified by the internal
>GPS.

>So.....if we were at war and an enemy has these kind of shells, why
>would we enable it to make it easy for them to hit us.

Unless you're talking about nukes, civilian GPS simply does not have
that level of accuracy. Civilian accuracy is fine for finding your
airport or campsite; I can normally find my way visually the last 50
feet.

_____
Get Your Private, Free Email at http://www.hotmail.com

916. Re: [APRSSIG:26759] Re: Garmin Jump-itis

From: Jon Ogden <jono@enteract.com>
Date: Fri, 31 Jul 98 14:19:25 -0500
To: <n3eop@hotmail.com>, <aprssig@tapr.org>
Message-ID: <199807311916.OAA22803@tapr.org>
Rendered body type: text/plain

>>Things such as artillery shells even have GPS now. They launch the
>>things at a specified destination. Once in free fall, fins pop out
>>to "steer" the shell to the cooridnates specified by the internal
>>GPS.
>
>>So.....if we were at war and an enemy has these kind of shells, why
>>would we enable it to make it easy for them to hit us.
>
>Unless you're talking about nukes, civilian GPS simply does not have
>that level of accuracy. Civilian accuracy is fine for finding your
>airport or campsite; I can normally find my way visually the last 50
>feet.

I do not think they put civilian GPS receivers in artillery shells.

73,

Jon
KE9NA

Jon Ogden

jono@enteract.com
www.qsl.net/ke9na

"A life lived in fear is a life half lived."

917. Re: [APRSSIG:26760] Re: Garmin Jump-itis

From: "David VanHorn" <dvanhorn@cedar.net>
Date: Fri, 31 Jul 1998 14:34:28 -0500
To: <jono@enteract.com>, <aprssig@tapr.org>
Message-ID: <01d801bdbcba$3d2c6320$a9f135ce@xenu>
Rendered body type: text/plain

IIRC, SA dithering is supposed to be kept less than 1mph rate, and also has a max error circle. Base stations moving at 90 mph is not going to be an SA problem.

918. Re: [APRSSIG:26759] Re: Garmin Jump-itis

From: Carl Hyde <carl.s.hyde@lmco.com>
Date: Fri, 31 Jul 1998 15:53:02 -0400
To: n3eop@hotmail.com
Cc: aprssig@tapr.org
Message-ID: <35C2209E.BD812F56@lmco.com>
Rendered body type: text/plain

CArl Hyde Replied:

It doesn't involve only Nukes. All MILSPEC GPS receivers such as the NAVY WRN-5 and the current NAVSSI system all receive the encrypted message that tells the receiver how to compensate for the intentional error in the signal. The system doesn't have to have the errors turned off because the system automatically de-encrypts the message and removes the errors. This is part of the ephemerous data broadcast by each sattelite. There are many weapons in the inventory that use GPS for targeting. The NAVY Tomahawk cruise missile uses GPS and terrain mapping to find the target. The 5 inch 62 caliber NAVY Gun Mount is capable of firing the Extended Range Guided Munition which is initialized from the ship's GPS receiver seconds before firing then locks on to the sattelites after it leaves the gun barrel with it's own GPS receiver. All this is in a five inch diameter projectile with a guidance section that stears the projectile to the target. The errors are induced mainly to keep potential enemies from using GPS with the same accuracy as the US Military. The Encryption cannot be used by anyone else because the key changes every pass when the sattelite is updated.

Paul Christenson wrote:

> >Things such as artillery shells even have GPS now. They launch the

> >things at a specified destination. Once in free fall, fins pop out
> >to "steer" the shell to the cooridnates specified by the internal
> >GPS.
>
> >So.....if we were at war and an enemy has these kind of shells, why
> >would we enable it to make it easy for them to hit us.
>
> Unless you're talking about nukes, civilian GPS simply does not have
> that level of accuracy. Civilian accuracy is fine for finding your
> airport or campsite; I can normally find my way visually the last 50
> feet.
>
> _____
> Get Your Private, Free Email at http://www.hotmail.com

--
Carl Hyde
carl.s.hyde@lmco.com
Desk: (609) 866-6386
Fax: (609) 866-6414

When I'm feeling down I just whistle. It makes my neighbor's
dog run to the end of the chain and gag himself!

I believe for every drop of rain that falls, a flower grows....
and a basement leaks, and a ball game gets rained out,
and a car rusts, and........

919. San Jose trip

From: "Guy Story" <kc5goi@infospeedway.net>
Date: Fri, 31 Jul 1998 15:12:21 -0500
To: <aprssig@tapr.org>
Message-ID: <000801bdbcbf$8a4bf0d0$592ddf26@lab2.icomply.com>
Rendered body type: text/plain

Hello everyone, I am going to be making a trip to San Jose Calif. on August 1 to 6. Looking for info in the area on digi's. I have not had time to research the digi.pos file yet. I will be operating as kc5goi on a 5 watt ht.
73 Guy, KC5GOI

920. Re:HSP Cable and END OF...

From: kd4ydc@juno.com (Robert W Burton)
Date: Fri, 31 Jul 1998 16:37:18 -0400
To: wa6ylb@theworks.com
Cc: aprssig@tapr.org
Message-ID: <19980731.163723.8942.0.KD4YDC@juno.com>
Rendered body type: text/plain

I got up at 6:00am and started at it again!
There are some differences between Bob's and the one at NW APRS page.

Gave up....made a switch to go back and forth between TNC and GPS.
Running SPH and only hold for a sec. If some bad data comes thru
(maybe held the switch too long or bad sat.coverage) I get "BAD NMEA"
in the upper left corner...seems to go deaf till I refresh the screen.
Guess I will be hitting that spacebar alot going to Florida.....(Mickey's
Place)
Leave Sunday and stay for 8 days (back on following Monday).
Where does .79 leave and .39 come in S.GA to N.FL???
Hope to run APRS in hotel 24hrs....

BTW, I left Byron's message because I am starting to agree with him!
Went to a 386 and still get "BAD" data....what gives!

Robert Burton
KD4YDC
AEC ARES / NWS in Peachtree City
GA SKYWARN
On Fri, 31 Jul 1998 10:58:07 Byron Smith <wa6ylb@theworks.com> writes:
>Dude - its not the cable, its the inability of APRSdos to
>accept this amount of data from the garmin. If the number of out put
>lines
>were
>reduced, or at least only one line was selected, then APRSdos wont
>choke on
>them. FWIW, APRSdos using two serial ports doesnt choke.

>
>
>Byron Smith
>wa6ylb@theworks.com - Website: theworks.com/~wa6ylb
>wa6ylb@wa6ylb.#cca.ca.usa.noam
>
>If a turtle doesn't have a shell, is he homeless or naked?
>

_____
You don't need to buy Internet access to use free Internet e-mail.
Get completely free e-mail from Juno at http://www.juno.com
Or call Juno at (800) 654-JUNO [654-5866]

921. Re: Garmin Jump-itis

From: "Paul Christenson" <n3eop@hotmail.com>
Date: Fri, 31 Jul 1998 13:56:14 PDT
To: aprssig@tapr.org
Message-ID: <19980731205614.5519.qmail@hotmail.com>
Rendered body type: text/plain

CArl Hyde Replied:

>It doesn't involve only Nukes. All MILSPEC GPS receivers such as the
>NAVY WRN-5 and the current NAVSSI system all receive the encrypted
>message that tells the receiver how to compensate for the intentional
>error in the signal.

Remember, the original discussion was about having SA turned off vs.
wandering like mad during battle.

I know that military GPS systems are unaffected by SA. My point was
that the precision of civilian GPS is generally not sufficient for
guiding missles, even with SA turned off.

_____
Get Your Private, Free Email at http://www.hotmail.com

922. MS Outlook and mail lists

From: Jeff Brenton <jeffb@espi.com>
Date: Fri, 31 Jul 1998 16:14:47 -0500
To: aprssig <aprssig@tapr.org>
Message-ID: <35C233C7.92F@espi.com>
Rendered body type: text/plain

At the risk of being called nasty names for attempting to help people
(in this case those who have been sucked in by Microsoft B-), let me
post a GENERAL, not pointed at anyone in particular, advisory regarding
MS Outlook (all versions) and mail lists such as APRSSIG:

Make sure that you have set the program to send messages as TEXT ONLY
when going to mail lists. As evidenced by several messages in the last
couple of days, "HTML-enhanced" (the default message type in Outlook)
messages do NOT go through the mailer well.

Why is this, you might ask? Because Microsoft encodes HTML messages
different than the 95% of the market they don't own (yet), and remailers
haven't been updated to accommodate this. So, the "Multi-part
MIME-encoded" messages come through as a header, no text.

You CAN read the message, if you select "View/Document source" in
Netscape, and probably something similar in other mail programs...
including MS Outlook!

This is one of the two major reasons I can not convert to MSOutOfLuck;
the other being the inability of it to leave mail on the server, for
later retrieval.

Of course, O'Reilly & Associates sells a 600-page book on how to get
Outlook to do what you thought it was supposed to do... B-)
--

Jeff Brenton, Ham radio call KA9VNV
http://www.espi.com
Questionable web page: http://www.dididahdahdidit.com
Covert supporter of the Vast Right Wing Conspiracy (tm)

923. RE: [APRSSIG:26765] Re: Garmin Jump-itis

From: "Demos Doulou" <sdoulou1@tampabay.rr.com>
Date: Fri, 31 Jul 1998 17:38:45 -0400
To: <aprssig@tapr.org>
Message-ID: <000601bdbccb$98730660$0100a8c0@one.tampabay.rr.com>
Rendered body type: text/plain

And neither is the military version, that's why they setup DGPS to work
with the military signal in the theater of operation.

Demos Doulou KR4US
Pinellas Cty, Florida
 ACS Radio Officer
kr4us@amsat.org
sdoulou1@tampbay.rr.com

-----Original Message-----
From: aprssig@tapr.org [mailto:aprssig@tapr.org]On Behalf Of Paul
Christenson
e.

I know that military GPS systems are unaffected by SA. My point was
that the precision of civilian GPS is generally not sufficient for
guiding missles, even with SA turned off.

_____
Get Your Private, Free Email at http://www.hotmail.com

924. Re: [APRSSIG:26725] HSP CABLE, DOES THIS WORK?

From: Ralph Fowler <rwf@BSRG.org>
Date: Fri, 31 Jul 1998 18:26:38 -0400
To: kd4ydc@juno.com, aprssig@tapr.org
Message-ID: <199807312228.SAA14007@camel8.mindspring.com>
Rendered body type: text/plain

I think that at least the 9 pin version of that diagram on the Othello site
is WRONG!

Power for the traditional HSP comes from DSR on the laptop (pin 6 of the
DB9). I found that my Compaq 386 had no power on pin 6 and changed the
circuit on my original Paccomm HSP to get power from the TNC. On the
Paccomm TNCs the power can come from pin 6 of the 9 pin. Later Paccomm
changed their circuit to connect pin 6 straight thru so the hsp could get
power from either end.

On a KPC 3 you can get power from pin 25 if you put in the internal jumper,
like I told you when you were here.

The Othello diagram shows the Collector of the switching transistor going
to pin 7, which is RTS.   Try moving the wires collector over to pin 6 ,
AFTER verifying that there is some voltage there (like about 6 -12 or so).

I do not have a 25 pin layout handy, but the Othello diagram shows the
collector tied to pin 4. Is that DSR? If not, then that one is wrong too.

At 05:52 AM 7/31/98 -0500, you wrote:
>This hsp cable has been built 3 or 4 times now!   I am getting almost
>constant gsp
>data. Don't think that it is switching. Can someone check this?
>Othello.localaccess.com/nwaprs/hsp.htm

925. WinAPRS 2.2.1

From: Earl Needham <kd5xb@amsat.org>
Date: Fri, 31 Jul 1998 17:03:11 -0600
To: aprssig@tapr.org
Message-ID: <3.0.3.32.19980731170311.0086e5d0@mail.pdrpip.com>

Rendered body type: text/plain

Downloaded 2.2.1 last night, and it's great. does exactly what I was
hoping for!

        Just one question -- I see about half of a box on the right side of the
screen, with Course, Speed, and Altitude in it. However, it's too far to
the right to read. Seems to be part of the map, as I can't drag it
anywhere to get a better view.

        FM you guys!

        7 3
        Earl

Earl Needham, KD5XB   mailto:KD5XB@AMSAT.ORG
Clovis, New Mexico   DM84 N34.403 W103.334

926. Comm Buffer Overflow - DOS

From: wo4u@juno.com
Date: Fri, 31 Jul 1998 19:52:53 -0400
To: aprssig@tapr.org
Message-ID: <19980731.195357.14238.3.wo4u@juno.com>
Rendered body type: text/plain

Ever since I installed a WX station I have been fighting the Comm Buffer
Overflow problem with APRS-DOS. I also run a GATE with the same station.
It goes into Comm Buffer Overflow everytime I am in the Send Mode
preparing a message. The computer is a Pentium Pro 200 with 64 megs of
RAM. The same problem existed with the 486 that preceeded it. I have
been in frequent contact with Bob about this problem for about 18 months.
 It is on his list of things to fix - but perhaps can't be done and still
use only conventional memory.

However, I do not recall seeing anything on the SIG from any one else
regarding this problem. If I am the only one having the problem, I would
like to ask Bob to remove it from his "fix-it" list. I am now using
another program that does not have the problem and I don't want Bob to
spend his time working on something that only impacted one station.

Paul - WO4U

_____
You don't need to buy Internet access to use free Internet e-mail.
Get completely free e-mail from Juno at http://www.juno.com
Or call Juno at (800) 654-JUNO [654-5866]

927. Re: [APRSSIG:26731] Tracker Batteries

From: Ken Wise KE6QNK <kwise@california.com>
Date: Fri, 31 Jul 1998 17:00:04
To: aprssig@tapr.org
Message-ID: <3.0.5.16.19980731170004.3237912e@global.california.com>
Rendered body type: text/plain

At 08:56 7/31/98 -0500, you wrote:
>snip !!

>One thing for certain, there is a 100% markup or higher on batteries as
>luxury items so shopping around does payoff.. Now, the question is bang
>for the buck. If they have a good battery, WHY NOT PUT THE AMP-HOURS on
>the package and stand behind it!   Grrrr...
>
>

Hello All I work in a grocery store in Ca. and I looked in my price
book here...Th mark-up on both duracell & the OTHER brand
was 47%....still to high

and I agree put the AH on the pack OR is it ALL just advertizing?

****
Ken Wise.............Amateur Radio Station KE6QNK QTH Concord Ca.
Internet Email.......kenw17@juno.com or kwise@california.com
Packet Mail Address..KE6QNK@KB6AML.CA.USA.NA
Snail Mail address...P.O. Box 60   Concord, Ca. 94522-0060
WWW Page.............www.california.com/~kwise
ICQ#.................2015687 need icq? ... goto www.mirabilis.com
****

928. Mounting radios in vehicle

From: Jon Ogden <jono@enteract.com>
Date: Fri, 31 Jul 98 19:37:57 -0500
To: <aprssig@tapr.org>
Message-ID: <199808010029.TAA17184@tapr.org>
Rendered body type: text/plain

OK folks,

I have a question that I am certain SOMEONE must be able to help me with.

Last night I took possesion of a brand spankin' new Jeep Grand Cherokee.
Got my ham plates on, but now I need to finish the job and mount my
radios. Problem is - where?

My previous vehicle was also a Grand Cherokee and I couldn't figure
anything out in that one either so the radios sat on the floor. It was
quite a mess with the radio, TNC, etc.

I want to make things a little neater in the new vehicle.

So how do I do it????

On the basic level I need to mount my 2m mobile used for APRS along with
all the APRS hardware and my FT-7400 UHF radio. I thought about putting
the APRS mobile under the back seat, but that makes it difficult to get
to. I'd put the TNC in there, but the way Pico Packets loose their
brains, I'd never know if I was TXing or not.

One of you out there MUST have one of these vehicles and have solved this
problem.

HELP!

73,

Jon
KE9NA

Jon Ogden
KE9NA

http://www.qsl.net/ke9na

"A life lived in fear is a life half lived."

929. Re: [APRSSIG:26771] Re: Tracker Batteries

From: "Ray J. Vaughan" <rvaughan@gate.net>
Date: Fri, 31 Jul 1998 20:59:56 -0400
To: kwise@california.com
Cc: aprssig@tapr.org
Message-ID: <1.5.4.32.19980801005956.00b47b30@pop.gate.net>
Rendered body type: text/plain

At 07:05 PM 7/31/98 -0500, you wrote:
>At 08:56 7/31/98 -0500, you wrote:
>>snip !!
>
>>One thing for certain, there is a 100% markup or higher on batteries as
>>luxury items so shopping around does payoff.. Now, the question is bang
>>for the buck. If they have a good battery, WHY NOT PUT THE AMP-HOURS on
>>the package and stand behind it!   Grrrr...
>>
>>
>
>Hello All I work in a grocery store in Ca. and I looked in my price
>book here...Th mark-up on both duracell & the OTHER brand
>was 47%....still to high
>
>and I agree put the AH on the pack OR is it ALL just advertizing?

I think I know why they don't do that... it depends. The amp-hours will
vary according to the discharge rate. That's why both brands can claim to
be #1. Some work better on high discharge rates... like boom-boxes, and
some do better with low current draw... like caluculators.

Take 12V lead-acid cells. Cars use the high discharge rate (Starter)
models, UPSs use a deep discharge version.

To do it right, they would have to show you a time 'vs load graph. This
MIGHT be available for the industrial versions (same battery, different
packaging.) But maybe not for the consumer versions.   Oh, don't forget
shelf life... internal resistance effects this. Just sitting there some
designs will slowly die.

Your GPS and TNC battery pack life will differ depending on the sixe of the
batteries and the total current draw.   If at all possible, go with an
external gel cell shared by all. The only catch is, when the battery is
getting weak, and you go into TX mode, you might get a reset on the GPS and TNC.

Ray, KD4BBM

930. Battery life tester..??

From: Carl Taylor <carlt@icanect.net>
Date: Fri, 31 Jul 1998 21:33:48 -0400
To: aprssig@tapr.org
Message-ID: <199808010133.VAA11534@foo.icanect.net>
Rendered body type: text/plain

Does anybody have a circuit for doing life tests on batterys...
I built up one a coupla years ago, but it was tooo complicated (used a 8051
board)...

I would like to do some testing on gel-cells and alkalines...

--==Carl==--

931. Re: [APRSSIG:26772] Mounting radios in vehicle

From: John Langtry <ve3nec@castle.on.ca>
Date: Fri, 31 Jul 1998 21:36:24 -0400
To: aprssig@tapr.org
Message-ID: <35C27118.45EB@castle.on.ca>
Rendered body type: text/plain

Folks :

I'm in the same position as Jon is with his new toy.

In my last Jeep Grand, I mounted the radio on the driver's
side knee bolster; after I de-activated the airbag of course.
Now, before the flood on that topic comes, yes, you can
de-activate the airbag in Canada; but not (yet) in the U.S.A.
(Even *if* you can get the paperwork, good luck in finding
a licenced mechanic that will touch it !)

I put the TNC in the centre console, and ran the leads under
the carpet. The GPS antenna was mounted on the dash (passenger
side) AGAIN NO AIR BAG, and all this worked out well and
kept everyone happy.

But I too have a new toy, another Grand, and I'd be interested
in reading any other ideas.

vy 73 de John VE3NEC

--

                        John Langtry, VE3NEC
                         Credit Lodge # 219
                           905-873-8715
                           ve3nec@rac.ca
                           * * * * *

932. Re: [APRSSIG:26731] Tracker Batteries

From: k9opo@netusa1.net (Roger Grady)
Date: Fri, 31 Jul 1998 20:35:16 -0400 (EDT)
To: aprssig@tapr.org
Message-ID: <199808010035.UAA20129@gatem02.netusa1.net>
Rendered body type: text/plain

>Today, I noticed that RAOVAC were 2/3rds of what the others cost, so I
>bought them to add to the test.

A few weeks ago at Sam's Club I discovered Toshiba alkalines in packs of 40

for $9.99 - 25 cents each. At that price it's not worth fooling with Renewal rechargable alkalines, and it's even cheaper that the Sears alkalines when they put them on sale for 1/2 price. I have found that using rechargable batteries in my kid's devices is almost a waste. They can't, or won't, recognize when the batteries are dying, and usually totally discharge them. This is hard on nicads, and death to the Renewal alkalines. I have a set of the Toshibas in my Tripmate but haven't used it enough to know about the life yet.

Roger Grady K9OPO

933. KPC-3 & DCD pin ?

From: G & M Sainton <GSainton@Sympatico.ca>
Date: Fri, 31 Jul 1998 21:42:43 -0400
To: aprssig@tapr.org
Message-ID: <35C27293.9AFBA2E4@Sympatico.ca>
Rendered body type: text/plain

I would like to send APRS data only when I want, i.e when I press on a switch AND if frequency is not used.

Is someone know if it's possible with DCD pin out ?

Gilles ve2gqf

934. Re: [APRSSIG:26750] FW: Re: Tracker Batteries

From: k9opo@netusa1.net (Roger Grady)
Date: Fri, 31 Jul 1998 20:43:44 -0400 (EDT)
To: aprssig@tapr.org
Message-ID: <199808010043.UAA21288@gatem02.netusa1.net>
Rendered body type: text/plain

>To: APRS SIG
>From: Allison-CFAD07 Skip on Fri, Jul 31, 1998 11:40 AM
>Subject: FW: [APRSSIG:26744] Re: Tracker Batteries
>
>I aggree! I think Consumer Reports gets paid off by the companies it's
>reviewing. I've seen absolute garbage that they rate as real good.

Everyone's entitled to their opinion, but mine is that CR strives very hard to remain independent of the manufacturers. I find their reports generally useful, but I don't always agree with them either. Many things don't lend themselves to totally objective evaluations and thus what one person views as important could be dismissed by another.

>I wonder if they've ever rated GPS receivers??

Not that I've seen. I'm sure I would have noticed that.

>Skip
>K9SA

Roger Grady K9OPO

935. Special Event Callsign in WinAPRS

From: BordingK@aol.com
Date: Fri, 31 Jul 1998 21:46:01 EDT
To: aprssig@tapr.org
Message-ID: <a5e064f8.35c2735a@aol.com>
Rendered body type: text/plain

I may be missing something very simple, but how do you use a special event callsign (like Hamfest) in WinAPRS. The software appears to look at the validation number and the callsign and sees a conflict.

Tried the Special Event, but that doesn't seem to have any effect.

Like to show the location of the Hamfest and have my call sign in the beacon text.

Thanks in advance.

de W5KNB
Ken

936. Lat/Long way off

From: John Martin <kb9oqc@iquest.net>
Date: Fri, 31 Jul 1998 20:45:57 -0500

To: aprssig@tapr.org
Message-ID: <3.0.3.32.19980731204557.00f3bcf4@pop.iquest.net>
Rendered body type: text/plain

Has anyone got any idea of why, when I put the Lat/Long in APRSW OR
APRS-SA, it incorrectly shows my position? It is only slightly off in
APRSW, but is WAY off in APRS-SA.

Any help would be appreciated.

Thanks
John
kb9oqc

937. Ping

From: Glenn Wiebe <gswiebe@mb.sympatico.ca>
Date: Fri, 31 Jul 1998 20:49:32 -0700
To: APRSSIG <aprssig@tapr.org>
Message-ID: <35C2904B.6FFB48DE@mb.sympatico.ca>
Rendered body type: text/plain

Hi all:

Here run APRS DOS 8.15 on HF

There are times when I would like to confirm that my station is working
and that a selected distant station can hear me and respond to my
packet. In other words, what ever happened to the PING command?

Thanks.....Glenn

--
Glenn Wiebe...Box 1563...Beausejour...MB...Canada...R0E 0C0
Email: gswiebe@mb.sympatico.ca.....ham radio call sign: VE4GN
Packet address: ve4gn@ve4ua.#wpg.mb.ca.noam

938. Re: [APRSSIG:26772] Mounting radios in vehicle

From: sarnold <sanold@access-net.com>
Date: Fri, 31 Jul 1998 20:54:37 -0500
To: jono@enteract.com
Cc: aprssig@tapr.org
Message-ID: <35C2755D.970B9AC8@access-net.com>
Rendered body type: text/plain

Jon,
 This may sound dramatic but; The way we install radios and trackers in the
Jeep Grand Cherokee is to relocate the park brake from the center console to
the left side of drivers seat on the floor. Most of the time we run into the
same problem as yours when law enforcement bring in the Cherokee(3 radios,
laptop, TNC, tracker, NCIC, etc.) Mount everything were the park brake use to
be. Hope this helps.

PS This is scary with a new ride but it works.

Scott

Jon Ogden wrote:

> OK folks,
>
> I have a question that I am certain SOMEONE must be able to help me with.
>
> Last night I took possesion of a brand spankin' new Jeep Grand Cherokee.
> Got my ham plates on, but now I need to finish the job and mount my
> radios. Problem is - where?
>
> My previous vehicle was also a Grand Cherokee and I couldn't figure
> anything out in that one either so the radios sat on the floor. It was
> quite a mess with the radio, TNC, etc.
>
> I want to make things a little neater in the new vehicle.
>
> So how do I do it????
>
> On the basic level I need to mount my 2m mobile used for APRS along with
> all the APRS hardware and my FT-7400 UHF radio. I thought about putting
> the APRS mobile under the back seat, but that makes it difficult to get
> to. I'd put the TNC in there, but the way Pico Packets loose their
> brains, I'd never know if I was TXing or not.

>
> One of you out there MUST have one of these vehicles and have solved this
> problem.
>
> HELP!
>
> 73,
>
> Jon
> KE9NA
>
> -----------------------------------
> Jon Ogden
> KE9NA
>
> http://www.qsl.net/ke9na
>
> "A life lived in fear is a life half lived."

939. Re: [APRSSIG:26766] MS Outlook and mail lists

From: k9opo@netusa1.net (Roger Grady)
Date: Fri, 31 Jul 1998 20:54:15 -0400 (EDT)
To: aprssig@tapr.org
Message-ID: <199808010054.UAA22846@gatem02.netusa1.net>
Rendered body type: text/plain

>At the risk of being called nasty names for attempting to help people
>(in this case those who have been sucked in by Microsoft B-), let me
>post a GENERAL, not pointed at anyone in particular, advisory regarding
>MS Outlook (all versions) and mail lists such as APRSSIG:
>
>Make sure that you have set the program to send messages as TEXT ONLY
>when going to mail lists. As evidenced by several messages in the last
>couple of days, "HTML-enhanced" (the default message type in Outlook)
>messages do NOT go through the mailer well.
>
>Why is this, you might ask? Because Microsoft encodes HTML messages
>different than the 95% of the market they don't own (yet), and remailers
>haven't been updated to accommodate this. So, the "Multi-part
>MIME-encoded" messages come through as a header, no text.

On the old version of Eudora Lite that I use, they don't come through at
all. They start to download and then it stops. I have to go to another mail
program to download that (empty) message so I can get to the rest of them. I
know, I know, I should upgrade my mail program, but otherwise this one works
and meets my needs. I've looked at a newer version of Eudora Lite with more
pretty icons and geewhizzy look, but it's actually harder (for me, anyway)
to use. That seems to be the way of much software these days.

Roger Grady K9OPO

940. Re: [APRSSIG:26761] Re: Garmin Jump-itis

From: k9opo@netusa1.net (Roger Grady)
Date: Fri, 31 Jul 1998 20:56:30 -0400 (EDT)
To: aprssig@tapr.org
Message-ID: <199808010056.UAA23175@gatem02.netusa1.net>
Rendered body type: text/plain

>IIRC, SA dithering is supposed to be kept less than 1mph rate, and also has
>a max error circle. Base stations moving at 90 mph is not going to be an SA
>problem.

I once saw over 6 mph on my II+ while sitting still. 2-3mph is very common.
If SA dithering is really supposed to be 1 mph or less, what else is causing it?

Roger Grady K9OPO

941. Re: [APRSSIG:26772] Mounting radios in vehicle

From: Jon Ogden <jono@enteract.com>
Date: Fri, 31 Jul 98 21:08:41 -0500
To: "sarnold" <sanold@access-net.com>
Cc: <aprssig@tapr.org>
Message-ID: <199808010200.VAA22612@tapr.org>
Rendered body type: text/plain

>Jon,
> This may sound dramatic but; The way we install radios and trackers in the
>Jeep Grand Cherokee is to relocate the park brake from the center console to
>the left side of drivers seat on the floor. Most of the time we run into the

>same problem as yours when law enforcement bring in the Cherokee(3 radios,
>laptop, TNC, tracker, NCIC, etc.) Mount everything were the park brake use to
>be. Hope this helps.
>
>PS This is scary with a new ride but it works.
>
>Scott

Not a bad idea, but.....

It's got to cost an arm and a leg! WOW! The other problem with it is
that I like my cupholders! :-) Also, what do you do when you trade it
in? How would I explain that?

I am really looking for something a little simpler that I can do myself.

It's a great idea though; I never use that parking brake.......

73,

Jon
KE9NA

Jon Ogden
KE9NA

http://www.qsl.net/ke9na

"A life lived in fear is a life half lived."

942. Re: [APRSSIG:26775] Re: Mounting radios in vehicle

From: "Ray J. Vaughan" <rvaughan@gate.net>
Date: Fri, 31 Jul 1998 22:04:59 -0400
To: ve3nec@castle.on.ca
Cc: aprssig@tapr.org
Message-ID: <1.5.4.32.19980801020459.00920a0c@pop.gate.net>
Rendered body type: text/plain

>But I too have a new toy, another Grand, and I'd be interested
>in reading any other ideas.

Check out www.tessco.com.   There's no catalog there, but when you get a
paper catalog, check out their mounting hardware.   There's lots of hump and
dash board options.   I think there's an air-bag template. You unfold it
and it shows the size of the air bag. If it touches your radios, you have
to move them (or disconnect it).

Ray, KD4BBM

943. Re: [APRSSIG:26772] Mounting radios in vehicle

From: Earl Needham <kd5xb@amsat.org>
Date: Fri, 31 Jul 1998 20:22:28 -0600
To: aprssig@tapr.org
Message-ID: <3.0.3.32.19980731202228.00902df0@mail.pdrpip.com>
Rendered body type: text/plain

At 07:31 PM 7/31/98 -0500, Jon Ogden sent:
<snip>
>Last night I took possesion of a brand spankin' new Jeep Grand Cherokee.
>Got my ham plates on, but now I need to finish the job and mount my
>radios. Problem is - where?

        See if you can find a company called IIX. They make very nice mobile
mounts for radios, if perhaps a little pricey. I have one that I've had in
two different cars, and it works very well.
        First car was a 1986 Dodge Grand Caravan, where it was mounted between the
front bucket seats. The second car is a 1989 Olds Calais, where the mount
is in the far front of the passenger footwell.

        In the Caravan, I mounted a Kenwood TS-430S, Yaesu FT-690R2, and three
Kenwood VHF/UHF single-band mobiles. Also mounted two scanners and a
cellular phone. The radios were very neat, but the antennas were a
different story!

        In the Olds, I only mount a scanner and the 430. the footwell is a little
cramped. :-(

The radio mount uses four bolts through the floor and is really sturdy. I recommend this mount. (For what my recommendation is worth. <G>)

Seriously, it's a good mount.

7 3
Earl

Earl Needham, KD5XB mailto:KD5XB@AMSAT.ORG
Clovis, New Mexico DM84 N34.403 W103.334

944. 2.2.1 map?

From: Earl Needham <kd5xb@amsat.org>
Date: Fri, 31 Jul 1998 20:30:45 -0600
To: aprssig@tapr.org
Message-ID: <3.0.3.32.19980731203045.00947980@mail.pdrpip.com>
Rendered body type: text/plain

I seem to have lost a function in WinAPRS 2.2.1. In 2.2.0, I could select a map while in the Precision Mapping window, say, SOUTHWEST, and the map would shrink to that size. 2.2.1 won't. Hmm...

7 3
Earl

Earl Needham, KD5XB mailto:KD5XB@AMSAT.ORG
Clovis, New Mexico DM84 N34.403 W103.334

945. Re: [APRSSIG:26778] Re: FW: Re: Tracker Batteries

From: LYN <designserv@ipass.net>
Date: Fri, 31 Jul 1998 22:34:58 -0400
To: k9opo@netusa1.net
Cc: aprssig@tapr.org
Message-ID: <35C27ED2.AFB344FC@ipass.net>
Rendered body type: text/plain

Roger Grady wrote:

> >I wonder if they've ever rated GPS receivers??
>
> Not that I've seen. I'm sure I would have noticed that.
>

About a year ago I saw a report evaluating several GPS units.

It was done by a company who specializes in testing equipment for use on sailboats. Since it was about a year ago, I'm certain that newer models and improvements to old ones have probably made the comparison obsolete by now, but that should at least give you a direction to look for info.

Good Luck,

Lyn, W4WDN

946. Re: [APRSNEWS:127] FW: WinAPRS version 2.2.1

From: "schiers" <schiers@netins.net>
Date: Fri, 31 Jul 1998 21:39:21 -0500
To: <aprssig@tapr.org>
Message-ID: <010f01bdbcf5$97bb8420$b6178ea7@schiers.netins.net>
Rendered body type: text/plain

Re: autocenter on any station

It doesn't appear to work with Replay Track...either that or I'm an idiot.

Someone confirm the latter, puleeease!

73

hasan schiers
schiers@netins.net
N0AN
-----Original Message-----
From: Stan Horzepa <stanzepa@mail2.nai.net>
To: aprsnews@tapr.org <aprsnews@tapr.org>

Date: Friday, July 31, 1998 8:06 PM
Subject: [APRSNEWS:127] FW: WinAPRS version 2.2.1

>Sender: Mark Sproul <msproul@ap.org>
>Subject: WinAPRS version 2.2.1
>
>A new version of WinAPRS has been posted on Rutgers, I will be putting it
>on TAPR as soon as I can.
>
>MacAPRS should be up shortly
>
>MacAPRS Version 3.2.1 - July 30, 1998
>WinAPRS Version 2.2.1
>
>   Autoscrolling of maps can now center on any station, click on a
> station icon and select AUTOSCOLL MOVING MAP from the Display
>   menu.

947. Re: [APRSSIG:26777] KPC-3 & DCD pin ?

From: Jeff Brenton <jeffb@espi.com>
Date: Fri, 31 Jul 1998 21:52:47 -0500
To: GSainton@sympatico.ca
Cc: aprssig <aprssig@tapr.org>
Message-ID: <35C282FF.7153@espi.com>
Rendered body type: text/plain

With CD set to EXTERNAL, grounding the XCD pin on the radio connector
will inhibit transmit, period. Ungrounding it will enable it, whenever
the TNC feels like it, without regard to channel use.

Only compromise would be CD INTERNAL, and open the squelch, closing it
when you want to enable transmit...
--

Jeff Brenton, Ham Radio call KA9VNV
Questionable web page: http://www.dididahdahdidit.com
Covert supporter of the Vast Right Wing Conspiracy (tm)

G & M Sainton wrote:
>
> I would like to send APRS data only when I want, i.e when I press on a
> switch AND if frequency is not used.
>
> Is someone know if it's possible with DCD pin out ?
>
> Gilles ve2gqf

948. Lat/Long Way Off

From: John Martin <kb9oqc@iquest.net>
Date: Fri, 31 Jul 1998 22:00:30 -0500
To: aprssig@tapr.org
Message-ID: <3.0.3.32.19980731220030.00e45b20@pop.iquest.net>
Rendered body type: text/plain

By the way, the Lat/Long I entered was from my GPS. (See message 26780)

John
kb9oqc

949. Re: Tracker Batteries

From: n8exf@juno.com (R L BOEHM)
Date: Fri, 31 Jul 1998 23:02:17 -0400
To: k9opo@netusa1.net
Cc: aprssig@tapr.org
Message-ID: <19980731.230553.12022.0.N8EXF@juno.com>
Rendered body type: text/plain

SNIP
>Everyone's entitled to their opinion, but mine is that CR strives very
>hard
>to remain independent of the manufacturers. I find their reports
>generally
>useful, but I don't always agree with them either. Many things don't
>lend
>themselves to totally objective evaluations and thus what one person
>views
>as important could be dismissed by another.
SNIP

>Roger Grady K9OPO
>
>
You must never have worked in consumer audio/video. All the bench techs
used to get belly laughs from reading CR.

73 de Bob, N8EXF // KN
homepage   http://www.qsl.net/n8exf

Igloos are polar bear snacks, crunchy on the outside, warm and chewy on
the inside.

_____
You don't need to buy Internet access to use free Internet e-mail.
Get completely free e-mail from Juno at http://www.juno.com
Or call Juno at (800) 654-JUNO [654-5866]

950. Re: Tracker Batteries

From: n8exf@juno.com (R L BOEHM)
Date: Fri, 31 Jul 1998 23:05:53 -0400
To: k9opo@netusa1.net
Cc: aprssig@tapr.org
Message-ID: <19980731.230553.12022.1.N8EXF@juno.com>
Rendered body type: text/plain

IMHO "you get what you pay for", I tried Toshiba AA's from Sam's and they
were near useless. In my pager, they lasted about 1/2 the time as
Duracell, in my Mag-light, about 1/4 the time.
73 de Bob, N8EXF // KN
homepage   http://www.qsl.net/n8exf

Igloos are polar bear snacks, crunchy on the outside, warm and chewy on
the inside.

On Fri, 31 Jul 1998 20:49:37 -0500 (CDT) k9opo@netusa1.net (Roger Grady)
writes:
>>Today, I noticed that RAOVAC were 2/3rds of what the others cost, so
>I
>>bought them to add to the test.
>
>A few weeks ago at Sam's Club I discovered Toshiba alkalines in packs
>of 40
>for $9.99 - 25 cents each. At that price it's not worth fooling with
>Renewal
>rechargable alkalines, and it's even cheaper that the Sears alkalines
>when
>they put them on sale for 1/2 price. I have found that using
>rechargable
>batteries in my kid's devices is almost a waste. They can't, or won't,
>
>recognize when the batteries are dying, and usually totally discharge
>them.
>This is hard on nicads, and death to the Renewal alkalines. I have a
>set of
>the Toshibas in my Tripmate but haven't used it enough to know about
>the
>life yet.
>
>Roger Grady K9OPO
>
>

_____
You don't need to buy Internet access to use free Internet e-mail.
Get completely free e-mail from Juno at http://www.juno.com
Or call Juno at (800) 654-JUNO [654-5866]

951. Re: Mounting radios in vehicle

From: n8exf@juno.com (R L BOEHM)
Date: Fri, 31 Jul 1998 23:10:33 -0400
To: jono@enteract.com
Cc: aprssig@tapr.org
Message-ID: <19980731.231034.12022.2.N8EXF@juno.com>
Rendered body type: text/plain

I guess you guys cannot mount radios above the rear-view mirror?? I
currently have my TS-50 above the mirror, a scanner to the right of the
TS50 and when I make a suitable mount, my GPSII+ to the left of the TS50.

The V/UHF is a TM741 with a remote head and mounted on the transmission
hump and the head on the dash. This is in an Astro van and I did the same
with the HF in my Dodge 4x4.
73 de Bob, N8EXF // KN
homepage   http://www.qsl.net/n8exf

Igloos are polar bear snacks, crunchy on the outside, warm and chewy on
the inside.

_____
You don't need to buy Internet access to use free Internet e-mail.
Get completely free e-mail from Juno at http://www.juno.com
Or call Juno at (800) 654-JUNO [654-5866]

952. Re: [APRSSIG:26785] Re: Mounting radios in vehicle

From: sarnold <sanold@access-net.com>
Date: Fri, 31 Jul 1998 22:22:30 -0500
To: jono@enteract.com
Cc: aprssig@tapr.org
Message-ID: <35C289F5.90774AD3@access-net.com>
Rendered body type: text/plain

Jon Ogden wrote:

> >Jon,
> > This may sound dramatic but; The way we install radios and trackers in the
> >Jeep Grand Cherokee is to relocate the park brake from the center console to
> >the left side of drivers seat on the floor. Most of the time we run into the
> >same problem as yours when law enforcement bring in the Cherokee(3 radios,
> >laptop, TNC, tracker, NCIC, etc.) Mount everything were the park brake use to
> >be. Hope this helps.
> >
> >PS This is scary with a new ride but it works.
> >
> >Scott
>
> Not a bad idea, but.....
>
> It's got to cost an arm and a leg! WOW! The other problem with it is
> that I like my cupholders! :-) Also, what do you do when you trade it
> in? How would I explain that?
>
> I am really looking for something a little simpler that I can do myself.
>
> It's a great idea though; I never use that parking brake.......
>
> 73,
>
> Jon
> KE9NA
>

Jon you can still use the park brake, nothing is damaged except new holes for
radios and park brake. Take a look at it this weekend, remove the plastic tray
center console and look at the park brake mounting. Just remove the cable from the
PB and remove the screws and wa-la. reroute the cable underneath truck, make a
hole for the cable to enter and mount PB (be sure to allow for free movement of
PB). Then mount radios in the new acre of real-estate. Then go to wal-mart and buy
new cup holders to fit in window crack! :-) When the trucks come back in a few
years we just move every thing back and re-install plastic portions. If you have
carpet the holes for the screws will cover and blend nicely with a vacuum cleaner.

PS it just costs 1 leg and a finger (Does take all day to install all their
stuff).

Scott

> ------------------------------------
> Jon Ogden
> KE9NA
>
> http://www.qsl.net/ke9na
>
> "A life lived in fear is a life half lived."

953. Important conference

From: aa8ei@eos.net
Date: Fri, 31 Jul 1998 22:51:26 -0400

To: APRS SIG <aprssig@tapr.org>
Message-ID: <l03130303b1e832cf53d0@205.133.149.145>
Rendered body type: text/plain

This may be useful to someone here.
73, Tony

NASA, FEMA and The George Washington University are sponsoring the second
conference on The Applications of Remote sensing and GIS for Disaster
management at the GW Marvin Center, Washington, DC from January 19-21, 1999.
Full information on this conference is available on our web site at
http://www.gwu.edu/~cms/gis/ .

954. Re: [APRSSIG:26772] Mounting radios in vehicle

From: "David G. Henderson" <daveh@erie.net>
Date: Fri, 31 Jul 1998 23:35:32 -0400
To: Jon Ogden <jono@enteract.com>, aprssig@tapr.org
Message-ID: <199808010337.XAA06084@moose.erie.net>
Rendered body type: text/plain

On 31 Jul 98, at 19:31, Jon Ogden <jono@enteract.com> wrote:

> Last night I took possesion of a brand spankin' new Jeep Grand
> Cherokee. Got my ham plates on, but now I need to finish the job
> and mount my radios. Problem is - where?
[snip]
> I want to make things a little neater in the new vehicle.
>
> So how do I do it????

Jon and the gang,

I have a 98 Grand Cherokee. Here's what I did:

Bought Radio Shack's roof rack mounts. Threw away all
unessential parts and modified the antenna hole to fit the Antenna
Specialist antennas I used. I placed one antenna in the center of
each cross bar, front and rear. Routed one coax along each side
of roof rack securing with black tie wraps to just above center post
between front and rear doors. Put small hole in rubber door
gasket through which I passed the coax thus offering protection
from smashing and shorting. Then inside under the plastic center
pillar moulding from the roof to the floor. Again using tie wraps
and securing to the seat mount, across the floor behind each seat.
 Tuck the coax under the rear of the console at the floor and then
between the passenger seat and the console. If your coax already
has PL-259's on it you'll have to start from the inside and work out
and up to the roof.

Mounted two radios side by side between passenger seat and
front of console. Necessitates four holes be drilled in the plastic
of the console. Secure radio brackets with 1/4 inch wood screws
into the plastic. When you remove the radios in the future, put
screws back in holes. Good looking screws painted the color of
the console plastic will look like they belong there to the untrained
eye. Of course another ham many be first in line to buy the
vehicle if he spots the screws because he'll immediately know
where to put his radios.

Power wires secured with tie wraps (12 ga. plus and minus, with
fuses at battery) come from battery, across front of engine
compartment, along driver side fender and through the rubber
grommet used for the steering wheel shaft hole. The using tie
wraps to secure to anything, run the wires above the steering
wheel shaft and pedal linkages across under the dash and under
plastic center dash area. Then tuck under the passenger side of
console at floor and to the back of each radio.

There you have it--one afternoon's work, three years of operation
until the lease runs out, a passenger seat that doesn't move as far
to the front as it used to, a neat installation, and a future sale to
another ham. What more could you ask???

Have fun!

73, Dave, N3EOY
mailto:daveh@erie.net

955. Re: Mounting radios in vehicle

From: Jon Ogden <jono@enteract.com>
Date: Fri, 31 Jul 98 22:47:17 -0500
To: "R L BOEHM" <n8exf@juno.com>
Cc: <aprssig@tapr.org>
Message-ID: <199808010338.WAA03541@tapr.org>
Rendered body type: text/plain

>I guess you guys cannot mount radios above the rear-view mirror?? I
>currently have my TS-50 above the mirror, a scanner to the right of the
>TS50 and when I make a suitable mount, my GPSII+ to the left of the TS50.
>The V/UHF is a TM741 with a remote head and mounted on the transmission
>hump and the head on the dash. This is in an Astro van and I did the same
>with the HF in my Dodge 4x4.

I suppose so. Except I have a console up there AND a sunroof. Kinda
makes mounting difficult. I've thought about it in the past, except I
hate the idea of the mic cord hanging down.

Thanks for the help.

>
>Igloos are polar bear snacks, crunchy on the outside, warm and chewy on
>the inside.

I love that! :-)

73,

Jon
KE9NA

Jon Ogden
KE9NA

http://www.qsl.net/ke9na

"A life lived in fear is a life half lived."

956. Re: [APRSSIG:26783] Re: MS Outlook and mail lists

From: Jon Ogden <jono@enteract.com>
Date: Fri, 31 Jul 98 22:48:25 -0500
To: <k9opo@netusa1.net>, <aprssig@tapr.org>
Message-ID: <199808010339.WAA03759@tapr.org>
Rendered body type: text/plain

>I've looked at a newer version of Eudora Lite with more
>pretty icons and geewhizzy look, but it's actually harder (for me, anyway)
>to use. That seems to be the way of much software these days.

It is so that Bill Gates can control your lives.

Buy an Apple and shaft Bill Gates! :-)

73,

Jon
KE9NA

Jon Ogden
KE9NA

http://www.qsl.net/ke9na

"A life lived in fear is a life half lived."

957. Re: [APRSSIG:26770] Comm Ovrflw & APRSdr

From: Bob Bruninga <bruninga@nadn.navy.mil>
Date: Fri, 31 Jul 1998 23:42:36 -0400 (EDT)
To: wo4u@juno.com
Cc: aprssig@tapr.org

Message-ID: <Pine.SOL.3.96.980731233338.377B-100000@arctic>
Rendered body type: text/plain

On Fri, 31 Jul 1998 wo4u@juno.com wrote:

> Ever since I installed a WX station I have been fighting the Comm Buffer
> Overflow problem with APRS-DOS...
> It is on his list of things to fix...

Perfect timing! Im taking my laptop and 2 backups to the beach this week
for family vacation and the #1 project on the list was to do the long
awainted spin-off of APRSwx and to also upgrade APRSdr. SOrry it has
tiaken this long.

APRSdr is a COURSE-FOLLOWING version of APRSdos that allows you to put
runners and cars (or any other object) on a RACE-COURSE and these objects
will run the course automatically by dead reckoning, including going
around corners. All you do in advance is use MAPFIX to sketch in the
course in the color purple on the map you will be using on event day.

The current version of APRSdr (over 2 years old) requires all maps that it
will use to be in the MAPS directory and for that map to be in the NORMAL
(not compressed format). Thus, you can still use it, but only after
loading the map into MAPFIX and re-saving it as NORMAL...

APRSdr is ideal for foot races where the runners dont carry GPS. ALl you
do is put the objects on the map wherever they were last reported by
voice, and they will continue to run the route automatically and be
transmitted to EVERYONE on the net as if they were reporting themselves.
ANYONE that gets new info on the runers posit, can uplink a correction,
and APRSdr will continue to report the DR based on the new correction.

The only thing you have to estimate is his speed. FOr the leaders in a
marathon, use 9 knots. For the last guy, use 5. FOr others, guestimate
inbetween... I dont have good estimates for cyclists yet. ANyone wanna
give some rules of thumb here?

bob

958. Re: [APRSSIG:26787] Re: Mounting radios in vehicle

From: Jon Ogden <jono@enteract.com>
Date: Fri, 31 Jul 98 22:52:09 -0500
To: <kd5xb@amsat.org>, <aprssig@tapr.org>
Message-ID: <199808010343.WAA04085@tapr.org>
Rendered body type: text/plain

>   See if you can find a company called IIX. They make very nice mobile
>mounts for radios, if perhaps a little pricey. I have one that I've had in
>two different cars, and it works very well.

Yes, I have heard of them and am considering it. This would be a way to
go. But I was just wanting to do it with the hardware that I already
have. That just may not work...Oh well.

>   The radio mount uses four bolts through the floor and is really sturdy. I
>recommend this mount. (For what my recommendation is worth. <G>)

I get quivers when I think about bolting through my brand new floor!
Yikes, but maybe I'll just have to do it. *sigh*

In the same way, I want to put in a pedestal to mount my cell phone.
Gotta bolt that one too.

Thanks for the help. This may be what I end up doing.

73,

Jon
KE9NA

Jon Ogden
KE9NA

http://www.qsl.net/ke9na

"A life lived in fear is a life half lived."

959. Re: [APRSSIG:26777] KPC-3 & DCD pin ?

From: Bob Bruninga <bruninga@nadn.navy.mil>
Date: Fri, 31 Jul 1998 23:50:17 -0400 (EDT)
To: G & M Sainton <GSainton@sympatico.ca>
Cc: aprssig@tapr.org
Message-ID: <Pine.SOL.3.96.980731234739.377D-100000@arctic>
Rendered body type: text/plain

On Fri, 31 Jul 1998, G & M Sainton wrote:

> I would like to send APRS data only when I want, i.e when I press on a
> switch AND if frequency is not used.
> Is someone know if it's possible with DCD pin out ?

Not sure, but that might buffer them all up for a big blast when you finally let DCD released. Best solution may be a combo of PTT switch and DCD. Thus you disable all of them with an open PTT, and then hold off the last one until you release DCD... OOPS. THis requires you to anticipate when to renable PTT N seconds in advance of DCD. Nevermind...

960. Re: [APRSSIG:26781] Ping

From: Bob Bruninga <bruninga@nadn.navy.mil>
Date: Fri, 31 Jul 1998 23:52:33 -0400 (EDT)
To: Glenn Wiebe <gswiebe@mb.sympatico.ca>
Cc: aprssig@tapr.org
Message-ID: <Pine.SOL.3.96.980731235131.377E-100000@arctic>
Rendered body type: text/plain

On Fri, 31 Jul 1998, Glenn Wiebe wrote:

> There are times when I would like to confirm that my station is working
> and that a selected distant station can hear me and respond to my
> packet. In other words, what ever happened to the PING command?

It was renmaed to a "CQ" and moved to the XMT menu... Same function.

de WB4APR

961. Re: [APRSSIG:26772] Mounting radios in vehicle

From: Jon Ogden <jono@enteract.com>
Date: Fri, 31 Jul 98 23:08:47 -0500
To: "David G. Henderson" <daveh@erie.net>, <aprssig@tapr.org>
Message-ID: <199808010400.XAA05779@tapr.org>
Rendered body type: text/plain

>Jon and the gang,
>
>I have a 98 Grand Cherokee. Here's what I did:
>
[snip]
> Put small hole in rubber door
>gasket through which I passed the coax thus offering protection
>from smashing and shorting. Then inside under the plastic center
>pillar moulding from the roof to the floor. Again using tie wraps
>and securing to the seat mount, across the floor behind each seat.
> Tuck the coax under the rear of the console at the floor and then
>between the passenger seat and the console.

Nice work!
>
>Mounted two radios side by side between passenger seat and
>front of console. Necessitates four holes be drilled in the plastic
>of the console. Secure radio brackets with 1/4 inch wood screws
>into the plastic. When you remove the radios in the future, put
>screws back in holes. Good looking screws painted the color of
>the console plastic will look like they belong there to the untrained
>eye. Of course another ham many be first in line to buy the
>vehicle if he spots the screws because he'll immediately know
>where to put his radios.

Not a bad idea at all. I guess, I'll just have to break down and drill the doggone holes! I thought about putting the radios there, but wasn't sure if I'd like it there.

It's not a bad idea about the screws. Not bad at all.

>
>Power wires secured with tie wraps (12 ga. plus and minus, with

>fuses at battery) come from battery, across front of engine
>compartment, along driver side fender and through the rubber
>grommet used for the steering wheel shaft hole. The using tie
>wraps to secure to anything, run the wires above the steering
>wheel shaft and pedal linkages across under the dash and under
>plastic center dash area. Then tuck under the passenger side of
>console at floor and to the back of each radio.

My old Jeep had a grommet there too. My new one does not. The steering
wheel column runs through a plate that is bolted to the firewall. No way
to run a wire through there and I can't find any other "easy" grommets in
that area. I did find one on the passenger side, but it's up pretty high
and will be hard to get to inside. I'll figger something out.
>
>There you have it--one afternoon's work, three years of operation
>until the lease runs out, a passenger seat that doesn't move as far
>to the front as it used to, a neat installation, and a future sale to
>another ham. What more could you ask???

Sounds pretty decent. I'll have to check it out.

Thanks for the advice.

73,

Jon
KE9NA

Jon Ogden
KE9NA

http://www.qsl.net/ke9na

"A life lived in fear is a life half lived."

962. Re: [APRSSIG:26792] Lat/Long Way Off

From: Bob Bruninga <bruninga@nadn.navy.mil>
Date: Sat, 1 Aug 1998 00:00:16 -0400 (EDT)
To: John Martin <kb9oqc@iquest.net>
Cc: aprssig@tapr.org
Message-ID: <Pine.SOL.3.96.980731235614.377G-100000@arctic>
Rendered body type: text/plain

On Fri, 31 Jul 1998, John Martin wrote:

> By the way, the Lat/Long I entered was from my GPS. (See message 26780)

The APRS standard for LAT/LONG is in Degrees and decimal minutes. Be sure
you are entering them that way. ALL versions of APRS are supposed to
present ONLY this format to the user so that we all speak the same
language. (SOme versions of APRS may offer the user the ability do do
conversions from D,M,Seconds, but it is NOT the APRS standard (APRS uses
the NMEA standard that is the default in all GPS data).

We must adhere to this so that we all "talk" and communicate whether
by voice, written notes, or APRS using one common default position format
or we shoot ourselves in the foot everytime we try to "talk" about a
position on the air...

de WB4APR

963. Re: [APRSSIG:26785] Re: Mounting radios in vehicle

From: Jon Ogden <jono@enteract.com>
Date: Fri, 31 Jul 98 23:10:53 -0500
To: "sarnold" <sanold@access-net.com>
Cc: <aprssig@tapr.org>
Message-ID: <199808010402.XAA06104@tapr.org>
Rendered body type: text/plain

>Jon you can still use the park brake, nothing is damaged except new holes for
>radios and park brake. Take a look at it this weekend, remove the plastic tray
>center console and look at the park brake mounting. Just remove the cable
from the
>PB and remove the screws and wa-la. reroute the cable underneath truck, make a
>hole for the cable to enter and mount PB (be sure to allow for free movement
of PB). Then

>mount radios in the new acre of real-estate. Then go to wal-mart
>and buy new cup holders to fit in window crack! :-) When the trucks come back
in a few
>years we just move every thing back and re-install plastic portions. If you
have
>carpet the holes for the screws will cover and blend nicely with a vacuum
cleaner.

Hmm.. No, that isn't so hard. Except on the Grand Cherokee, the
transmission console and the parking brake console are all one solid
piece. So, if I removed all that, I'd have no center armrest, just a
shifter shaft sticking up, but plenty or radio room!

73,

Jon
KE9NA

Jon Ogden
KE9NA

http://www.qsl.net/ke9na

"A life lived in fear is a life half lived."

964. Re: [APRSSIG:26719] Garmin Jump-itis

From: Claude Head <k5dtn@wans.net>
Date: Fri, 31 Jul 1998 23:17:21 -0500
To: jeffb@espi.com
Cc: aprssig@tapr.org
Message-ID: <35C296D0.FF9E0E2C@wans.net>
Rendered body type: text/plain

Well, don't know if it is just you or not, but I've not seen that behavior
on
either my GPS 45 or the new GPS 48. Don't think it can be a problem with
being on too long. The '45, and now the '48 are mounted semipermanently
in the car and are essentially never turned off. The '45 would get confused
now and then, (maybe once a month?) and need to be re-intialized, but
the '48 has never shown that problem, and it's never turned off except when
the car's electrical system is being worked on.

73, Claude Head
      K5DTN

Jeff Brenton wrote:

> Is it just me, or are there a LOT of Garmin GPS units giving some rather
> bogus results in the last few days?
>
> This morning, my Jeep sent out a few packets showing me moving at 507
> knots across the ground. W9JBL-9 jumped from DeKalb, IL, to west of
> Moline (but still hit the same digipeater!), then back in 20 minutes.
>
> In my case, it may have been the fact that the GPS was on too long (it's
> been running for close to 3 weeks), but I don't think that's the case in
> in Barry's mobile...
> --
>
> Jeff Brenton, Ham Radio call KA9VNV
> Questionable web page: http://www.dididahdahdidit.com
> Covert supporter of the Vast Right Wing Conspiracy (tm)